www.reelschematic.com

Daiwa
ENGINEERED TACKLE

SPINNING REEL 7350RL

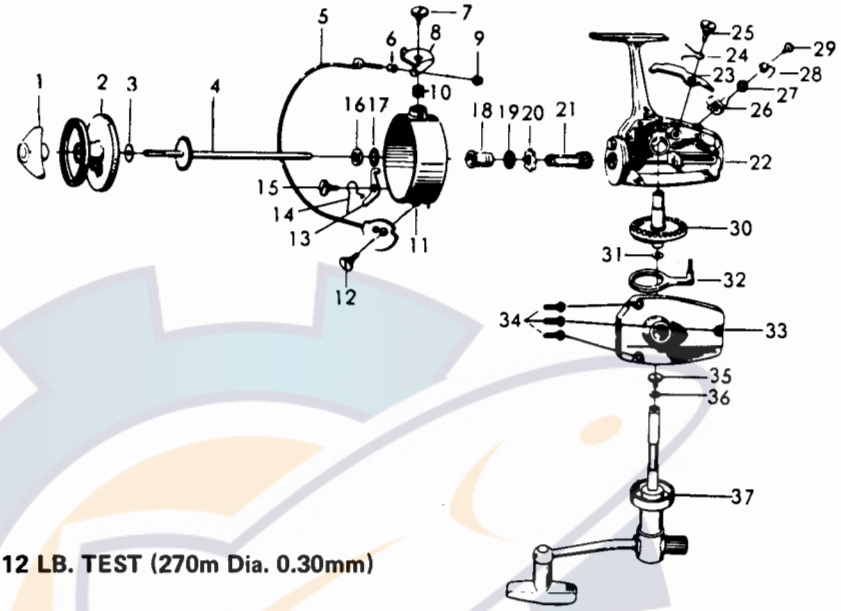

LINE CAPACITY: 250 YDS., 12 LB. TEST (270m Dia. 0.30mm)

Key No.	Parts No.	Parts Name
1	60034423	Drag knob
2	60034731	Spool assembly
3	63714412	Spool washer
4	60034801	Main shaft
5	60028832	Bail
6	62501901	Line roller
7	63616401	Arm lever screw
8	62303911	Arm lever
9	63408201	Bail nut
10	61409221	Bail spring
11	60064641	Rotor
12	63616501	Bail holder screw
13	65706611	Bail kick lever
14	61405031	Bail kick lever spring
15	63611511	Bail kick lever screw
16	63405842	Rotor nut
17	61601611	Rotor washer
18	65002431	Pinion collar A
19	65002301	Pinion collar B
20	62801321	Ratchet
21	64007741	Pinion
22	60064504	Body
23	61104011	Anti-reverse claw
24	61413011	Anti-reverse claw spring
25	63611511	Anti-reverse claw screw
26	64602811	Anti-reverse cam
27	61501751	Anti-reverse lever washer
28	65403711	Anti-reverse lever
29	63501931	Anti-reverse lever screw
30	64110851	Drive gear
31	63712820	Drive gear washer
32	60075311	Oscillating slider
33	60608211	Body cover
34	63513701	Body cover screw
35	63513631	Handle screw
36	63719521	Handle washer
37	60073661	Handle