www.reelschematic.com

# Daiwa 760/760H Fixed Spool Reel

**CUSTOM SPINNING REEL FOR FRESH WATER OR LIGHT SALT WATER FISHING. Excellent performance, thorough construction. Gun metal dark blue case, black anodized metal spool, ebony drag and handle knob. Precise cut "Face" gear assures smooth and perfect line spooling. Extra large spool capacity for this type reel, approximately 250 yards of 15 pound test monofilament.**

Gear Ratio 3.4 : 1 Net Weight 14½ oz.

Available in Four models.

**#760** : For right hand anglers (with left hand retrieve)
**#760R**: For left hand anglers (with right hand retrieve)
**#760H, #760RH**: For the Discriminating Fisherman-with high speed retrieve system and extra power.
Features unique sealed "Hi-Flo" ball-bearing mounted movement

| | | |
|---|---|---|
| ★ | 1 | Drag knob |
| | 2 | Spool assembly |
| ★ | 3 | Spool washer |
| ★ | 4 | Main shaft |
| ★ | 5 | Oscillating slider |
| ★ | 6 | Oscillating slider pin |
| ★ | 7 | Rotor nut |
| ★ | 8 | Rotor washer C |
| ★ | 9 | Rotor retaining washer |
| | 10 | Rotor assembly |
| | 11 | Bail arm stopper |
| ★ | 12 | Bail arm stopper spring |
| ★ | 13 | Bail arm stopper screw |
| ★ | 14 | Bail arm spring |
| ★ | 15 | Bail arm cam A |
| ★ | 16 | Bail arm cam A screw |
| | 17 | Bail arm w/cam B |
| ★ | 18 | Bail arm roller |
| ★ | 19 | Bail arm roller washer |
| ★ | 20 | Bail arm nut |
| ★ | 21 | Bail arm cam B screw |
| ★ | 22 | Rotor washer |
| ★ | 23 | Pinion gear washer |
| ★ | 24 | Pinion gear |
| ★ | 25 | Main body |
| ★ | 26 | Master gear washer |
| ★ | 27 | Master gear |
| | 28 | Handle assembly |
| ★ | 29 | Handle washer |
| ★ | 30 | Anti-reverse cam |
| ★ | 31 | Anti-reverse spring |
| ★ | 32 | Anti-reverse claw |
| ★ | 33 | Anti-reverse claw screw |
| ★ | 34 | Anti-reverse lever spring washer |
| ★ | 35 | Anti-reverse lever |
| ★ | 36 | Anti-reverse lever screw |
| ★ | 37 | Side plate |
| ★ | 38 | Side plate screw |

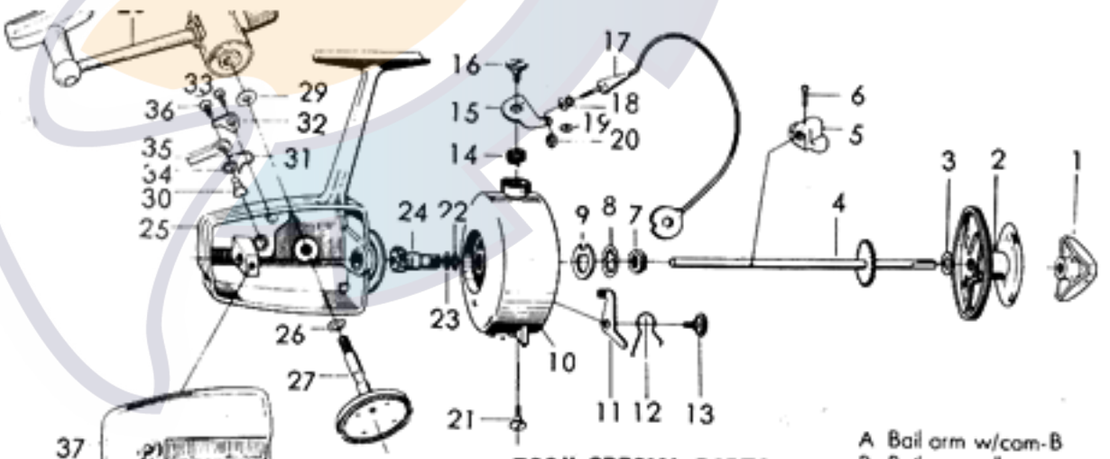


## 760H SPECIAL PARTS

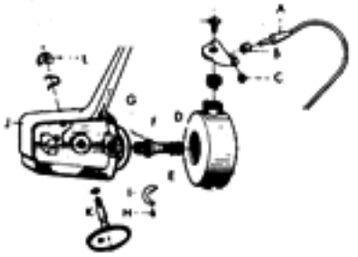


A Bail arm w/cam-B
B Bail arm roller
C Bail arm nut
D Ball bearing retaining nut
E Pinion gear collar
F Pinion gear
G Ball bearing
H Brake retaining screw
I Rotating Brake
J Main body
K Master gear
L Anti-reverse claw