FURUNO®

Back

Installation Manual
COLOR LCD SOUNDER
FCV-1200L/FCV-1200LM

FURUNO ELECTRIC CO., LTD.
NISHINOMIYA, JAPAN

9-52 Ashihara-cho,
Nishinomiya 662-8580, JAPAN

Telephone : 0798-65-2111
Fax : 0798-65-4200

Your Local Agent/Dealer

Printed in Japan

FIRST EDITION : APR. 2000
R3 : JUL. 21, 2004

Pub. No. IME-23650-R3

(KAMI) FCV-1200L/LM

00080900700

IME23650R30

⚠ SAFETY INSTRUCTIONS

⚠ WARNING

ELECTRICAL SHOCK HAZARD
Do not open the equipment unless totally familiar with electrical circuits and service manual.

Only qualified personnel should work inside the equipment.

Turn off the power at the switchboard before beginning the installation.

Fire or electrical shock can result if the power is left on.

Do not install the equipment where it may get wet from rain or water splash.

Water in the equipment can result in fire, electrical shock or equipment damage.

Be sure no water leaks in at the transducer mounting location.

Water leakage can sink the vessel. Also, confirm that the transducer will not loosen by ship's vibration. The installer of the equipment is solely responsible for the proper installation of the equipment. FURUNO will assume no responsibility for any damage associated with improper installation.

Be sure that the power supply is compatible with the voltage rating of the equipment.

Connection of an incorrect power supply can cause fire or equipment damage. The voltage rating of the equipment appears on the label above the power connector.

⚠ WARNING

Install the transducer according to the installation instructions.

Failure to install the transducer correctly may result in water leakage and damage to the ship's hull.

For wooden or FRP vessel using a steel tank, attach a zinc plate to the hull to prevent electrolytic corrosion.

Electrolytic corrosion can, in the worst case, result in loss of the transducer.

⚠ CAUTION

Ground the equipment to prevent mutual interference.

Observe the following compass safe distances to prevent interference to a magnetic compass:

	Standard compass	Steering compass
CV-1201 CV-1202	0.3 m	0.2 m
CV-1203 CV-1203M MU-101C	0.75 m	0.5 m
IF-8000	0.95 m	0.65 m

Do not allow warm water or any other liquid other than seawater or freshwater to contact the transducer.

Damage to the transducer may result.

Do not install the transducer where noise or air bubbles is present.

Performance will be affected.

⚠ CAUTION

The transducer cable must he handled carefully, following the guidelines below.

- **Keep fuels and oils away from the cable.**
- **Locate the cable where it will not be damaged.**
- **The cable sheath is made of chloro-phrene or polychloride vinyl, which are easily by damaged plastic solvents such as toulene. Locate the cable well away from plastic solvents.**

SYSTEM CONFIGURATION

Standard type

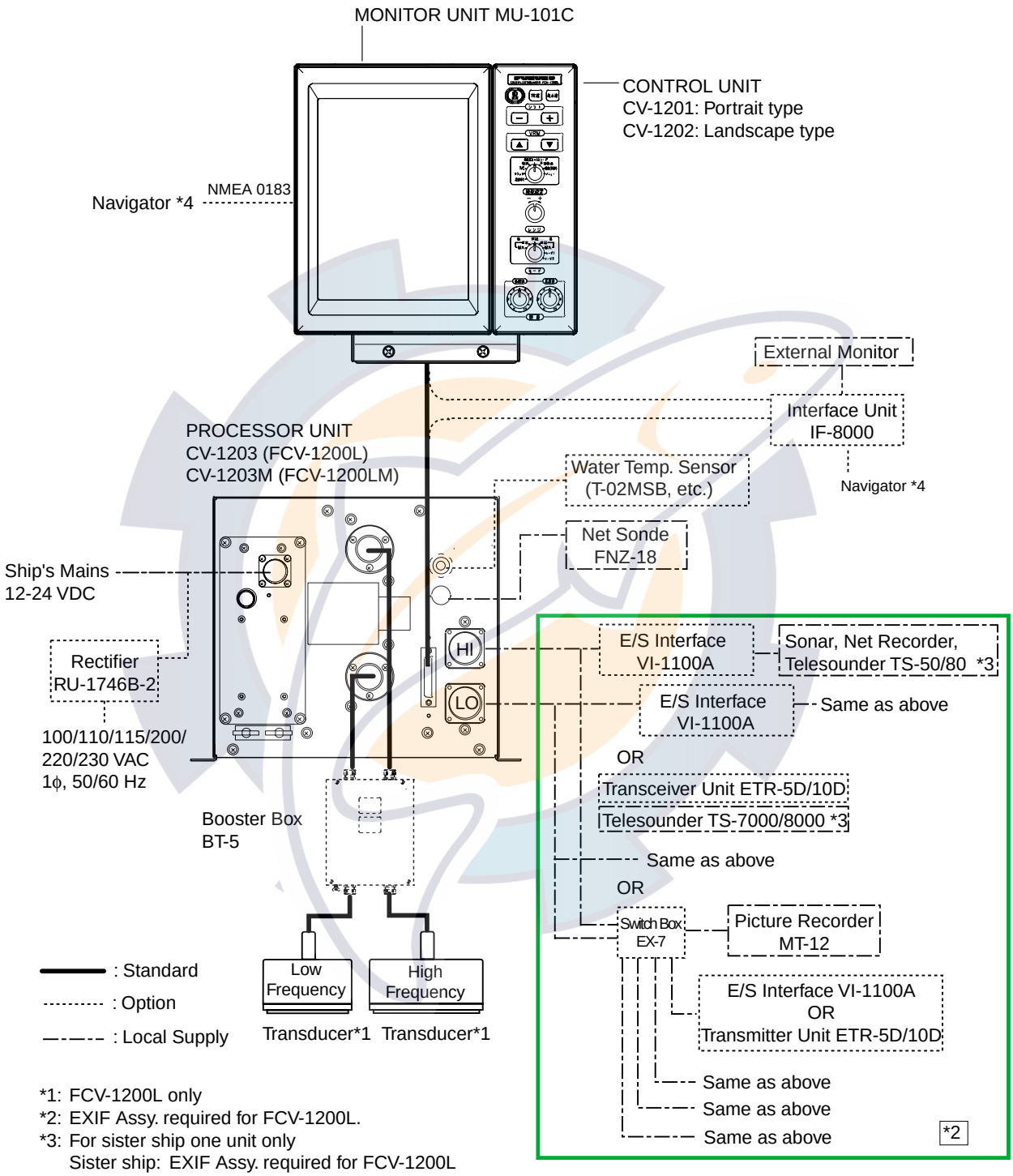

*1: FCV-1200L only
*2: EXIF Assy. required for FCV-1200L.
*3: For sister ship one unit only
Sister ship: EXIF Assy. required for FCV-1200L
Master ship: FCV-1200LM or FCV-1200L equipped with EXIF Assy.
*4: Navigator may be connected to interface unit or monitor unit.

Blackbox type

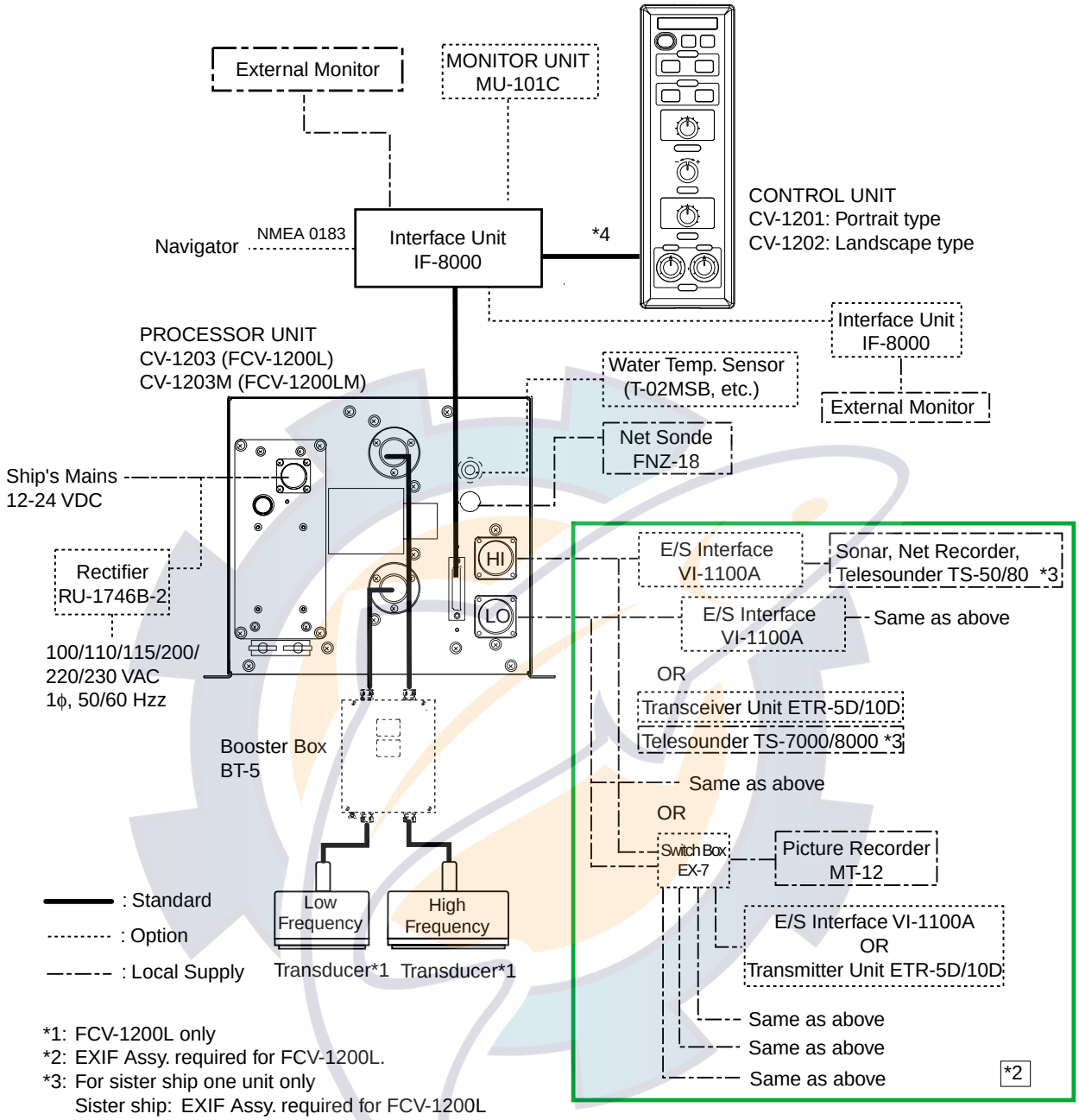

*1: FCV-1200L only
*2: EXIF Assy. required for FCV-1200L.
*3: For sister ship one unit only
Sister ship: EXIF Assy. required for FCV-1200L
Master ship: FCV-1200LM or FCV-1200L equipped with EXIF Assy.
*4: When connecting optional monitor unit, connect it to control unit.

EQUIPMENT LISTS

Standard supply

Name	Type	Code No.	Qty	Remarks	
Monitor Unit	CV-1201/MU-101C	–	1	Portrait type	Select one, with SP06-01101 (for dislay unit)
	CV-1202/MU-101C	–		Landscape type	
Processor Unit	CV-1203	–	1	For FCV-1200L	
	CV-1203M	–		For FCV-1200LM	
Spare Parts	SP02-04200	000-012-451	1 set	SP02-04001 (Processor Unit)	
Accessories	FP02-05100	000-012-474	1 set	For landscape-type monitor unit, FP02-05101 (Hanger), FP06-01102 (Hood)	
	FP02-05110	000-012-475		For portrait-type monitor unit, FP02-05101 (Hanger), FP02-05022 (Hood)	
Installation Materials	CP02-06540 (FCV-1200L, unibody)	000-012-464	1 set	06S4078 *1.5* m MJ-A10SPF0002-0015 (0.15 m) CP02-06501	
	CP02-06560 (FCV-1200LM, unibody)	000-012-466		06S4078 *1.5* m MJ-A10SPF0002-0015 (0.15 m) CP03-06511	
	CP02-06500 (FCV-1200L, unibody)	000-012-453		06S4078 *5* m MJ-A10SPF0002-0015 (0.15 m) CP02-06501	
	CP02-06510 (FCV-1200LM, unibody)	000-012-454		06S4078 *5* m MJ-A10SPF0002-0015 (0.15 m) CP02-06511	
	CP02-06550 (FCV-1200L, unibody)	000-012-465		06S4078 *10* m MJ-A10SPF0002-0015 (0.15 m) CP02-06501	
	CP02-06570 (FCV-1200LM, unibody)	000-012-467		06S4078 *10* m MJ-A10SPF0002-0015 (0.15 m) CP02-06511	
Transducer	Transducer available in 1, 2 and 3 kW models. See page ix - xx for details. No selection also available.				

Blackbox type

Name	Type	Code No.	Qty	Remarks	
Control Unit	CV-1201-E-15	–	1	1.5 m cable, portrait type	Select one
	CV-1201-E-50	–		5 m cable, portrait type	
	CV-1202-E-15	–		1.5 m cable, landscape type	
	CV-1202-E-50	–		5 m cable, landscape type	
Processor Unit	CV-1203	–	1	No transducer	
	CV-1203M	–		With transducer	
Spare Parts	SP02-04210	000-012-452	1 set	SP02-04001 (Processor Unit) SP06-01111 (Interface Unit)	
Interface Unit	IF-8000	–	1		
Accessories	FP06-01120	006-556-260	1 set	Landscape-type	
	FP02-05111	001-413-710	1	Flush mount type	
	06-021-2121	100-320-101	1	Hard cover For Control Unit	
Installation Materials	CP02-06520 (FCV-1200L)	000-012-455	1 set	06S4078 *5* m CP02-06501	
	CP02-06530 (FCV-1200LM)	000-012-456		06S4078 *5* m CP02-06511	
	CP02-06680 (FCV-1200L)	000-012-468		06S4078 *10* m CP02-06501	
	CP02-06690 (FCV-1200LM)	000-012-469		06S4078 *10* m CP02-06511	
	CP02-06610	000-012-480	1 set	1.5m cable	
	CP02-06620	000-012-481		5m cable	
Transducer	Transducer available in 1, 2 and 3 kW models. See page ix - xx for details. No selection also available.				

Optional equipment

Name	Type	Code No.	Qty	Remarks
Monitor Unit	MU-101C-H	–	1 set	Landscape type, with spare parts and accessories
Monitor Unit	MU-101C-V	–	1 set	Portrait type, with spare parts and accessories
Echosounder Interface	VI-1100A	–		
Switch Box	EX-7	–		

(Continued on next page.)

Optional equipment (con't)

Rectifier	RU-1746B-2	–			
Cable	MJ-A6SPF0012-050	000-134-424	1	6 pin-6 pin, 5 m, for navigator	
	MJ-A6SPF0012-100	000-133-817	1	6 pin-6 pin, 10 m, for navigator	
	MJ-A6SPF0011-050	000-132-244	1	6 pin-4 pin, 5 m, for navigator	
	MJ-A6SPF0011-100	000-132-336	1	6 pin-4 pin, 10 m, for navigator	
	MJ-A10SPF0002-0015	000-142-879	1	10 pin-10 pin, 0.15 m, for control unit	
	MJ-A10SPF0002-050	000-131-411	1	10 pin-10 pin, 5 m, for control unit	
	06S4078*1.5 m*	000-142-901	1	For monitor unit	
	06S4078*5 m*	000-142-902	1	For monitor unit	
	06S4078*10 m*	000-142-900	1	For monitor unit	
	NCS255AD-254P-L500	000-142-518	1	For unibody dual-frequency transducer	
Transceiver Unit	ETR-5D	–	1 set		
	ETR-10D	–	1 set		
Water Temperature Sensor	T-02MSB	000-040-040	1	Thru-hull mount	
	T-02MTB	000-040-026	1	Transom mount	
	T-03MSB	000-040-027	1	Thru-hull mount	
Connector	SRCN6A25-24P	000-508-676	1	For EXIF Board Assy.	
	FM14-8P	000-511-408	1	For FNZ-18	
	NCS-254-P	000-506-505	1	For connection of transducer	
EXIF Board Assy.	OP02-81	000-012-463	1 set	For FCV-1200L	
Interface Unit	IF-8000	–	1 set		
Unibody monitor unit flush mount kit	OP06-16	006-556-300	1 set	For monitor unit and control unit	
Separate monitor unit flush mount kit	OP06-17	006-556-310	1 set	For monitor unit	
Control unit flush mount kit	OP06-18	006-556-320	1 set	For control unit, Blackbox type	
Separate installation kit	OP02-83-1.5	001-413-600	1 set	1.5 m cable	Unibody flush mount
	OP02-83-5	001-413-610	1 set	5 m cable	
	OP06-15-1.5	006-559-140	1 set	1.5 m cable	Unibody tabletop
	OP06-15-5	006-559-150	1 set	5 m cable	
Cable Assy.	80-0654	001-413-880	1	For program ver.up	
Control Unit	CV-1201-E	–	1	Portrait type	
	CV-1202-E	–	1	Landscape type	
Booster Box	BT-5	–	1		

Available transducers

1 kW transducer

Frequency (kHz)	Hull Material	Transducer	Thru-Hull Pipe	Tank
15/45	Steel	15F-4S 45F-3H		
	FRP			
15/50	Steel	15F-4S 50B-6/6B		
	FRP			
	Steel	15F-4S 50B-9B		
	FRP			
	Steel	15F-4S 50F-8G		
	FRP			
15/68	Steel	15F-4S 68F-8H		
	FRP			
15/88	Steel	15F-4S 88B-8		
	FRP			
15/200	Steel	15F-4S 200B-5S		
	FRP			
28/45	Steel	28F-8 45F-3H		
	FRP			
28/50	Steel	28F-8 50B-6/6B		
	FRP			
	Steel	28F-8 50B-9B	TWB-6000 (2)	T-656
	FRP			
	Steel	28F-8 50F-8G		
	FRP			
28/68	Steel	28F-8 68F-8H		
	FRP			
28/88	Steel	28F-8 88B-8	TWB-6000 (2)	T-657
	FRP			
28/200	Steel	28F-8 200B-5S		
	FRP			
45/88	Steel	45F-3H 88B-8		
	FRP			

1 kW transducer (con't)

Frequency (kHz)	Hull Material	Transducer	Thru-Hull Pipe	Tank
45/200	Steel	45F-3H 200B-5S		
	FRP			
50/88	Steel	50B-6/6B 88B-8		
	FRP			
	Steel	50B-9B 88B-8	TWB-6000 (2)	T-658
	FRP			
	Steel	50F-8G 88B-8		
	FRP			
50/200	Steel	50B-6/6B 200B-5S		
	FRP			
	Steel	50B-9B 200B-5S		
	FRP			
	Steel	50F-8G 200B-5S		
	FRP			
	Steel	50/200-1T		
	FRP			
	Steel	50/200-1ST		
	FRP			
50/400	Steel	50B-6/6B 400B-52		
	FRP			
	Steel	50B-9B 400B-52		
	FRP			
	Steel	50F-8G 400B-52		
	FRP			
68/200	Steel	68F-8H 200B-5S		
	FRP			
88/200	Steel	88B-8 200B-5S		
	FRP			

2 kW transducer

Frequency (kHz)	Hull Material	Transducer	Thru-Hull Pipe	Tank
15/45	Steel	15F-10 45F-6H		
	FRP			
15/50	Steel	15F-10 50B-12	TFB-7000 (2)	T-627
	FRP			
15/68	Steel	15F-10 68F-30H		
	FRP			
15/88	Steel	15F-10 88B-10	TFB-7000 (2)	T-629
	FRP		TRB-1100 (2)	T-629-F
15/200	Steel	15F-10 200B-8/8B/8N	TFB-7000 (2)	T-632
	FRP		TRB-1100 (2)	T-632-F
28/45	Steel	28F-18 45F-6H		
	FRP			
28/50	Steel	28F-18 50B-12	TFB-7000 (2)	T-634
	FRP			
28/68	Steel	28F-18 68F-30H		
	FRP		TRB-1100 (2)	T-634-F
28/88	Steel	28F-18 88B-10	TFB-7000 (2)	T-636
	FRP		TRB-1100 (2)	T-636-F
28/200	Steel	28F-18 200B-8/8B/8N	TFB-7000 (2)	T-638
	FRP		TRB-1100 (2)	T-638-F
45/88	Steel	45F-6H 88B-10		
	FRP			
45/200	Steel	45F-6H 200B-8/8B/8N		
	FRP			
50/88	Steel	50B-12 88B-10	TFB-7000 (2)	T-643
	FRP		TRB-1100 (2)	T-643-F
50/200	Steel	50B-12 200B-8/8B/8N	TFB-7000 (2)	T-645
	FRP			
68/200	Steel	68F-30H 200B-8/8B/8N		
	FRP		TRB-1100 (2)	T-645-F
88/200	Steel	88B-10 200B-8/8B/8N	TFB-7000 (2)	T-649
	FRP		TRB-1100 (2)	T-649-F

3 kW transducer

*: 5 kW transducer.

Frequency (kHz)	Hull Material	Transducer	Thru-Hull Pipe	Tank
15/45	Steel	15F-10X2 45F-12H		
	FRP			
15/50	Steel	15F-10X2 50F-24H		
	FRP			
15/68	Steel	15F-10X2 68F-30H		
	FRP			
15/88	Steel	15F-10X2 88F-126H*		
	FRP			
15/107	Steel	15F-10X2 100B-10R		
	FRP			
15/150	Steel	15F-10X2 150B-12H		
	FRP			
15/200	Steel	15F-10X2 200B-12H*		
	FRP			
28/45	Steel	28F-24H 45F-12H		
	FRP			
28/50	Steel	28F-24H 50F-24H	TFB-7000 (2)	T-681
	FRP		TRB-1100 (2)	T-681-F
28/68	Steel	28F-24H 68F-30H		
	FRP			
28/88	Steel	28F-24H 88F-126H*	TFB-7000 (2)	T-682
	FRP		TRB-1100 (2)	T-682-F
28/107	Steel	28F-24H 100B-10R		
	FRP			
28/150	Steel	28F-24H 150B-12H	TFB-7000 (2)	T-683
	FRP		TRB-1100 (2)	T-683-F
28/200	Steel	28F-24H 200B-12H	TFB-7000 (2)	T-683
	FRP		TRB-1100 (2)	T-683-F
45/88	Steel	45F-12H 88F-126H		
	FRP			
45/107	Steel	45F-12H 100B-10R		
	FRP			
45/150	Steel	45F-12H 150B-12H		
	FRP			

3 kW transducer (con't)

*: 5 kW transducer.

Frequency (kHz)	Hull Material	Transducer	Thru-Hull Pipe	Tank
45/200	Steel	45F-12H 200B-12H*		
	FRP			
50/88	Steel	50F-24H 88F-126H*	TFB-7000 (2)	T-682
	FRP		TRB-1100 (2)	T-682-F
50/107	Steel	50F-24H 100B-10R		
	FRP			
50/150	Steel	50F-24H 150B-12H	TFB-7000 (2)	T-683
	FRP		TRB-1100 (2)	T-683-F
50/200	Steel	50F-24H 200B-12H*	TFB-7000 (2)	T-683
	FRP		TRB-1100 (2)	T-683-F
68/107	Steel	68F-30H 100B-10R		
	FRP			
68/150	Steel	68F-30H 150B-12H*	TFB-7000 (2)	T-646
	FRP		TRB-1100 (2)	T-646-F
68/200	Steel	68F-30H 200B-12H	TFB-7000 (2)	T-646
	FRP		TRB-1100 (2)	T-646-F
88/150	Steel	88F-126H* 150B-12H		
	FRP			
88/200	Steel	88F-126H* 200B-12H*	TFB-7000 (2)	T-685
	FRP		TRB-1100 (2)	T-685-F
107/200	Steel	100B-10R 200B-12H*	TFB-7000 (2)	
	FRP		TRB-1100 (2)	

1 kW/2 kW transducer

Output (W)	Frequency (kHz)	Hull Material	Transducer	Thru-hull Pipe	Tank
1 k/2 k	15/45	Steel	15F-4S 45F-6H		
		FRP			
	15/50	Steel	15F-4S 50B-12	TFB-7000 (2)	T-626
		FRP		TRB-1100 (2)	T-626-F
	15/68	Steel	15F-4S 68F-30H		
		FRP			
	15/88	Steel	15F-4S 88B-10	TWB-6000 (2)	T-628
		FRP		TRB-1100 (2)	T-628-F
	15/200	Steel	15F-4S 200B-8/8B/8N	TWB-6000 (2)	T-631
		FRP		TRB-1100 (2)	T-631-F
	28/45	Steel	28F-8 45F-6H		
		FRP			
	28/50	Steel	28F-8 50B-12		
		FRP			
	28/68	Steel	28F-8 68F-30H		
		FRP			
	28/88	Steel	28F-8 88B-10		
		FRP			
	28/200	Steel	28F-8 200B-8/8B/8N	TWB-6000 (2)	T-657
		FRP			
	45/88	Steel	45F-3H 88B-10		
		FRP			
	45/200	Steel	45F-3H 200B-8/8B/8N		
		FRP			

1 kW/2 kW transducer (con't)

Output (W)	Frequency (kHz)	Hull Material	Transducer	Thru-hull Pipe	Tank
1 k/2 k	50/88	Steel	50B-6/6B 88B-10		
		FRP			
		Steel	50B-9B 88B-10		
		FRP			
		Steel	50F-8G 88B-10	TFB-7000 (2)	T-636
		FRP		TRB-1100 (2)	T-636-F
	50/200	Steel	50B-6/6B 200B-8/8B/8N		
		FRP			
		Steel	50B-9 200B-8/8B/8N	TWB-6000 (2)	T-658
		FRP			
		Steel	50F-8G 200B-8/8B/8N	TFB-7000 (2)	T-638
		FRP		TRB-1000 (2)	T-638-F
	68/200	Steel	68F-8H 200B-8/8B/8N		
		FRP			
	88/200	Steel	88B-8 200B-8/8B/8N	TWB-6000 (2)	T-659
		FRP			

1 kW/3 kW transducer

*: 5 kW transducer.

Output (W)	Frequency (kHz)	Hull Material	Transducer	Thru-Hull Pipe	Tank
1 k/3 k	15/45	Steel	15F-4S 45F-12H		
		FRP			
	15/50	Steel	15F-4S 50F-24H		
		FRP			
	15/68	Steel	15F-4S 68F-30H		
		FRP			
	15/88	Steel	15F-4S 88F-126H*		
		FRP			
	15/107	Steel	15F-4S 100B-10R		
		FRP			
	15/150	Steel	15F-4S 150B-12H	TFB-7000 (2)	T-637
		FRP		TRB-1100 (2)	T-637-F
	15/200	Steel	15F-4S 200B-12H*		
		FRP			
	28/45	Steel	28F-8 45F-12H		
		FRP			
	28/50	Steel	28F-8 50F-24H		
		FRP			
	28/68	Steel	28F-8 68F-30H		
		FRP			
	28/88	Steel	28F-8 88F-126H*		
		FRP			
	28/107	Steel	28F-8 100B-10R		
		FRP			
	28/150	Steel	28F-8 150B-12H		
		FRP			
	28/200	Steel	28F-8 200B-12H*		
		FRP			
	45/88	Steel	45F-3H 88F-126H*		
		FRP			
	45/107	Steel	45F-3H 100B-10R		
		FRP			
	45/150	Steel	45F-3H 150B-12H		
		FRP			

1 kW/3 kW transducer (con't)

*: 5 kW transducer.

Output (W)	Frequency (kHz)	Hull Material	Transducer	Thru-Hull Pipe	Tank
1 k/3 k	45/200	Steel	45F-3H 200B-12H*		
		FRP			
	50/88	Steel	50B-6/6B 88F-126H*		
		FRP			
		Steel	50B-9B 88F-126H*		
		FRP			
		Steel	50F-8G 88F-126H*		
		FRP			
	50/107	Steel	50B-6/6B 100B-10R		
		FRP			
		Steel	50B-9B 100B-10R		
		FRP			
		Steel	50F-8 100B-10R		
		FRP			
	50/150	Steel	50B-6/6B 150B-12H		
		FRP			
		Steel	50B-9B 150B-12H		
		FRP			
		Steel	50F-8G 150B-12H		
		FRP			
	50/200	Steel	50B-6/6B 200B-12H*		
		FRP			
		Steel	50B-9B 200B-12H*		
		FRP			
		Steel	50F-8G 200B-12H*		
		FRP			
	68/107	Steel	68F-8H 100B-10R		
		FRP			
	68/150	Steel	68F-8H 150B-12H		
		FRP			
	68/200	Steel	68F-H 200B-12H*		
		FRP			
	88/150	Steel	88B-8 150B-12H		
		FRP			
	88/200	Steel	88B-8 200B-12H*		
		FRP			

2 kW/3 kW transducer

*: 5 kW transducer.

Output (W)	Frequency (kHz)	Hull Material	Transducer	Thru-Hull Pipe	Tank
2 k/3 k	15/45	Steel	15F-10 45F-12H		
		FRP			
	15/50	Steel	15F-10 50F-24H		
		FRP			
	15/68	Steel	15F-10 68F-30H		
		FRP			
	15/88	Steel	15F-10 88F-126H*		
		FRP			
	15/107	Steel	15F-10 100B-10R		
		FRP			
	15/150	Steel	15F-10 150B-12H		
		FRP			
	15/200	Steel	15F-10 200B-12H*		
		FRP			
	28/45	Steel	28F-18 45F-12H		
		FRP			
	28/50	Steel	28F-18 50F-24H		
		FRP			
	28/68	Steel	28F-18 68F-30H		
		FRP			
	28/88	Steel	28F-18 88F-126H*		
		FRP			
	28/107	Steel	28F-18 100B-10R	TFB-7000 (2)	T-636
		FRP		TRB-1100 (2)	T-636-F
	28/150	Steel	28F-18 150B-12H	TFB-7000 (2)	T-637
		FRP		TRB-1100 (2)	T-637-F
	28/200	Steel	28F-18 200B-12H*		
		FRP			
	45/88	Steel	45F-6H 88F-126H*		
		FRP			
	45/107	Steel	45F-6H 100B-10R		
		FRP			
	45/150	Steel	45F-6H 150B-12H		
		FRP			

2 kW/3 kW transducer (con't)

*: 5 kW transducer.

Output (W)	Frequency (kHz)	Hull Material	Transducer	Thru-Hull Pipe	Tank
2 k/3 k	45/200	Steel	45F-6H 200B-12H*		
		FRP			
	50/88	Steel	50B-12 88F-126H*		
		FRP			
	50/107	Steel	50B-12 100B-10R	TFB-7000 (2)	T-643
		FRP		TRB-1100 (2)	T-643-F
	50/150	Steel	50B-12 150B-12H	TFB-7000 (2)	T-644
		FRP		TRB-1100 (2)	T-644-F
	50/200	Steel	50B-12 200B-12H*		
		FRP			
	68/107	Steel	68F-30H 100B-10R		
		FRP			
	68/150	Steel	68F-30H 150B-12H		
		FRP			
	68/200	Steel	68F-30H 200B-12H*		
		FRP			
	88/150	Steel	88B-10 150B-12H		
		FRP			
	88/200	Steel	88B-10 200B-12H*		
		FRP			

3 kW/2 kW transducer

*: 5 kW transducer.

Output (W)	Frequency (kHz)	Hull Material	Transducer	Thru-Hull Pipe	Tank
3 k/2 k	15/45	Steel	15F-10X2 45F-6H		
		FRP			
	15/50	Steel	15F-10X2 50B-12		
		FRP			
	15/68	Steel	15F-10X2 68F-30H		
		FRP			
	15/88	Steel	15F-10X2 88B-10		
		FRP			
	15/200	Steel	15F-10X2 200B-8/8B/8N		
		FRP			
	28/45	Steel	28F-24H 45F-6H		
		FRP			
	28/50	Steel	28F-24H 50B-12		
		FRP			
	28/68	Steel	28F-24H 68F-30H		
		FRP			
	28/88	Steel	28F-24H 88B-10		
		FRP			
	28/200	Steel	28F-24H 200B-8/8B/8N		
		FRP			
	45/88	Steel	45F-12H 88B-10		
		FRP			
	45/200	Steel	45F-12H 200B-8/8B/8N		
		FRP			
	50/88	Steel	50F-24H 88B-10		
		FRP			
	50/200	Steel	50F-24H 200B-8/8B/8N		
		FRP			
	68/200	Steel	68F-30H 200B-8/8B/8N	TFB-7000 (2)	T-647
		FRP		TRB-1100 (2)	T-647-F
	88/200	Steel	88F-126H* 200B-8N		
		FRP			
	100/200	Steel	100B-10R 200B-8/8B/8N	TFB-7000 (2)	T-649
		FRP		TRB-1100 (2)	T-649-F

This page is intentionally left blank.

1. MOUNTING

1.1 Monitor Unit, Control Unit

The monitor and control units can be installed as one unit (unibody) or two separate units. The optional “separate monitor unit installation kit” is necessary when installing them as separate units. Further, these units can be mounted in a panel (requires optional flush mount kit), together or separately. See the outline drawings at the back of this manual for details.

Mounting considerations

- Locate the units out of direct sunlight.
- The operator should face the bow while viewing the display screen.
- Select a location where the display screen can be easily observed while operating the control unit.
- Leave sufficient space around the units for maintenance and servicing. Recommended maintenance space appears in the outline drawing at the back of this manual.

Mounting procedure

Desktop mounting

1. Fasten the mounting base to the mounting location with four tapping screws.

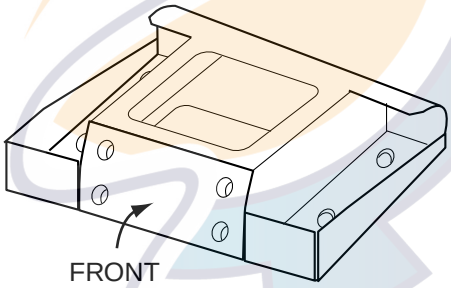

Figure 1-1 Mounting base

For portrait-type unibody monitor unit

a) Pass the signal cable (connects between interface unit and display unit) through the slot in the hanger and then connect the cable to the display unit.

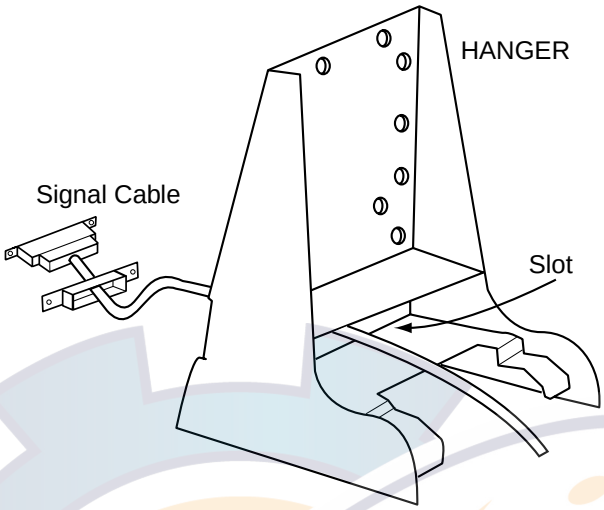

Figure 1-2 Hanger

b) Fasten the hanger at the rear of the display unit with four binding screws (M4X10).

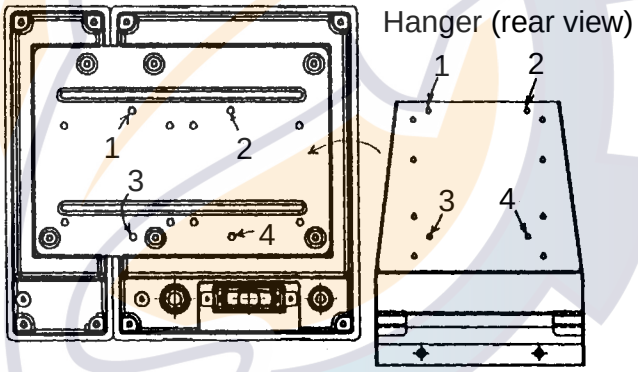

Figure 1-3 Hanger, rear view

For landscape-type unibody monitor unit

a) Attach the hanger at the rear of the display unit with four binding screws (M4X10).

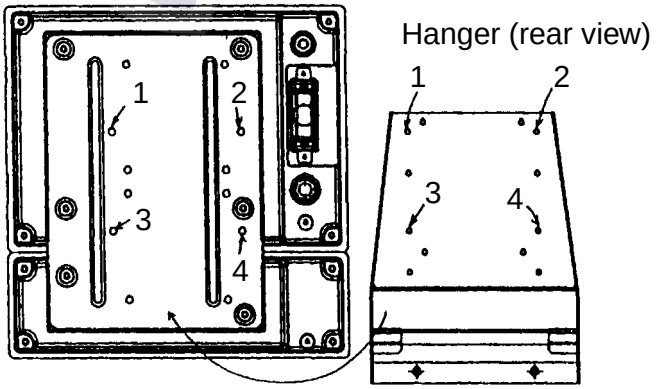

Figure 1-4 Hanger, rear view

Display unit for separate type, blackbox type (vertical-type control unit)

1. Dismount the coupling place from the rear of the display unit to separate display unit from control unit.
2. Pass the signal cable (connects between interface unit and display unit) through the slot in the hanger and then connect the cable to the display unit.

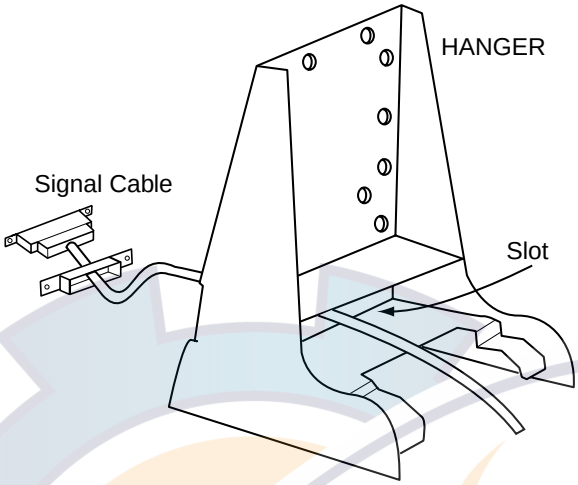

Figure 1-5 Monitor unit, rear view

3. Attach the hanger at the rear of the display unit with four binding screws (M4X10).

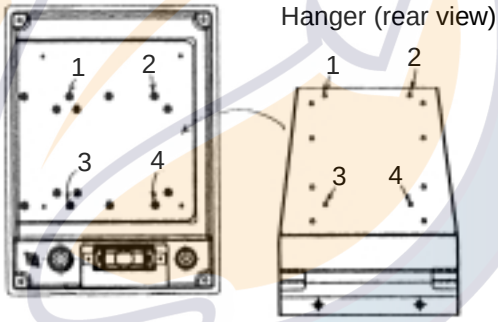

Figure 1-6 Hanger, rear view

Display unit for separate type, blackbox type (horizontal-type control unit)

1. Dismount the coupling place from the rear of the display unit to separate display unit from control unit.
2. Attach the hanger at the rear of the display unit with four binding screws (M4X10).

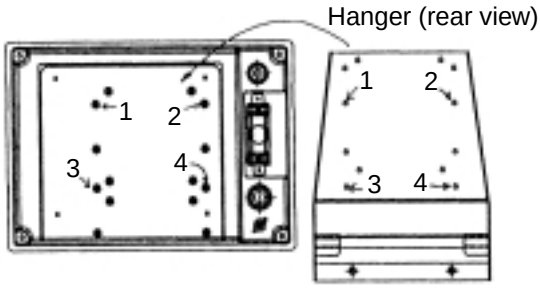

Figure 1-7 Hanger, rear view

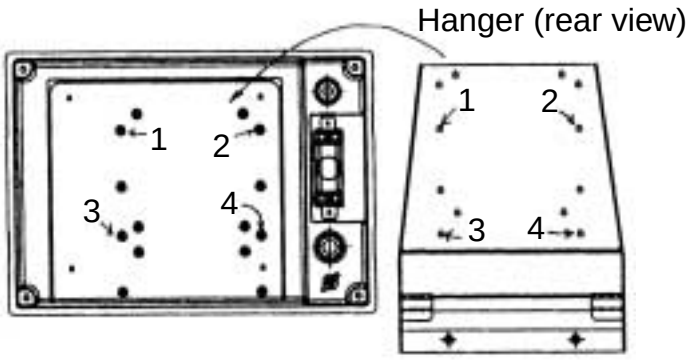

Figure 1-7 Hanger, rear view

3. Coat threads of upset screws (M6X16, 2 pcs.) used to fasten hanger to mounting base.
4. Fasten the hanger (or display unit) to the mounting base with two upset screws. (Use the upper holes to tilt the display unit 20°; lower holes to tilt it 9°.)

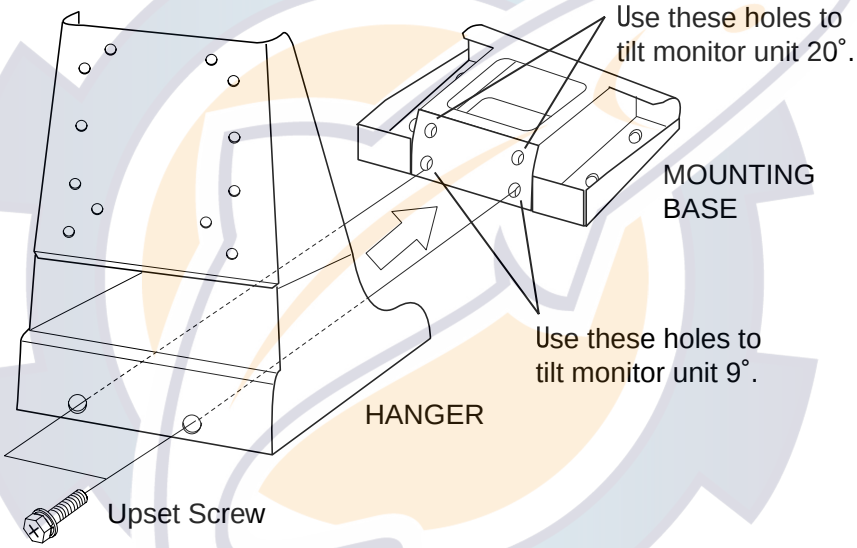

Figure 1-8 Fastening hanger to mounting base

Unibody monitor unit flush mount kit

Refer to the outline drawing at the back of this manual.

Unibody monitor unit flush mount kit: Type OP06-16, Code no. 006-556-300

Name	Type	Code No.	Qty	Remarks
Mounting Fixture	06-021-1311	100-279-610	1	
Tapping Screws	5X20	000-802-840	6	
Hex-head Screws	M4X12	000-882-040	4	

1. Make cutout in mounting location referring to page D-2A/D-2B.
2. Using four hex-head screws, fasten control and monitor units together with the mounting fixture.

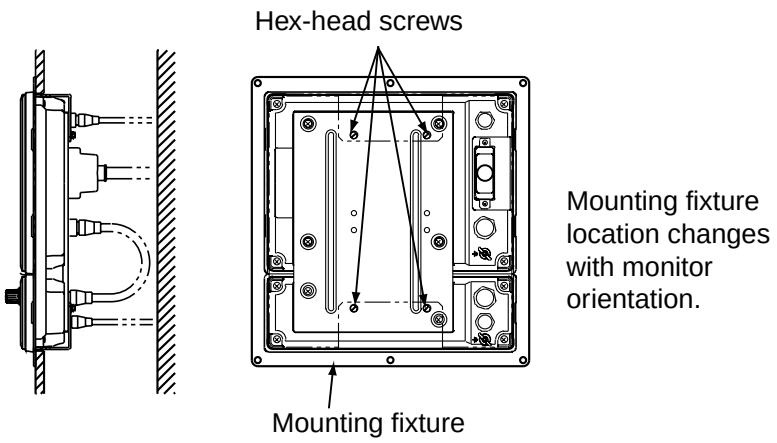

Figure 1-9 How to flush mount unibody type monitor unit

3. Fasten the monitor unit to the mounting location with six tapping screws.

Separate monitor unit flush mount kit

Separate monitor unit flush mount kit: Type OP06-17, Code no. 006-556-310

Name	Type	Code No.	Qty	Remarks
Mounting Fixture	06-021-1321	100-279-622	1	
Tapping Screws	5X20	000-802-840	4	
Hex-head Screws	M4X12	000-882-040	4	

1. Make cutout in mounting location referring to page D-8A/D-8B.
2. Fasten mounting fixture to monitor unit four hex-head screws.

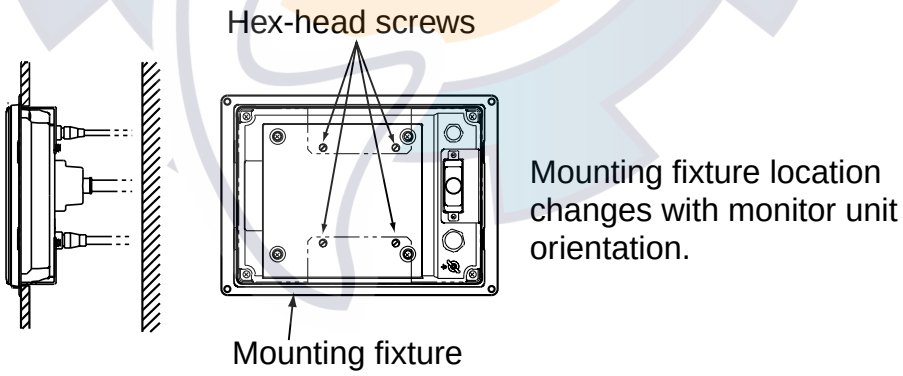

Figure 1-10 How to flush mount the control unit

3. Fasten monitor unit with mounting fixture to mounting location with four tapping screws.

Separate control unit flush mount kit

Control unit flush mount kit OP06-18 (Code no. 006-556-320)
Separate installation kit OP02-83-1.5 (Code no. 001-413-600)
Separate installation kit OP02-83-5 (Code no. 001-413-610)

Name	Type	Code No.	Qty	Remarks	
Mounting Fixture	06-021-2101	100-279-731	1		
Tapping Screws	5X20	000-802-840	4		
Hex-head Screws	M4X12	000-882-040	2		
Cable Assy.	MJ-A10SPF002-015	000-142-878	1	1.5 m	OP02-83 only
	MJ-A10SPF002-050	000-131-411		5 m	

1. Make cutout in mounting location referring to page D-5A/D-5B.
2. Fasten mounting fixture to control unit with two hex-head screws.

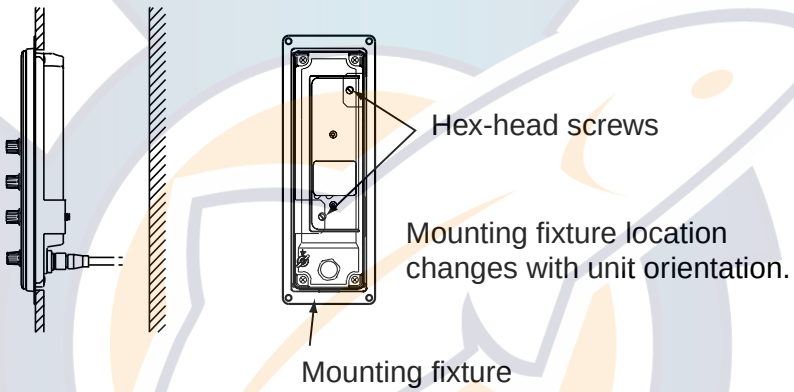

Figure 1-11 How to flush mount separate type control unit

3. Fasten the control unit to the mounting location with four tapping screws.

Separate installation kit

The optional “separate installation kit” or “control unit flush mount kit” is required to install the monitor and control units separate from one another. Below are the contents of the separate installation kit. Installation procedure is the same as for the control unit for the blackbox type. (See next page.) For control unit flush mount kit refer to above section.

Separate installation kit OP06-15-1.5 (with 1.5 m cable, code no. 006-559-140)
Separate installation kit OP06-15-5 (with 5 m cable, code no. 006-559-150)

Name	Type	Code	Qty	Remarks
Cable	MJ-A10SPF0002-015	000-142-878	1	1.5 m
	MJ-A10SPF0002-050	000-131-411		5 m
Control Unit Bracket	06-021-2112	100-281-880	1	
Control Unit Mounting Base	06-021-2111	100-279-740	1	
Tapping Screw	5X20	000-802-081	2	
Hex-head Screw	M4X12	000-882-040	4	
Cosmetic Plug	DP-687	000-808-417	2	

Blackbox type

Supply monitor and interconnection cable (D-sub connector, three rows of 15 pins, max. length 15 m) locally. The monitor connects to the interface unit, and should satisfy the specifications shown below.

- VGA type
- Analog RGB, 0.7 Vpp, positive polarity
- TLL level H, V, negative polarity

Control unit for blackbox type

The control unit comes in two types: portrait and landscape. The landscape-type control unit can be installed on a desktop or flush mounted in a panel. For desktop, the control unit should be fastened to the control unit mounting base (supplied with accessories). The portrait-type control unit is designed for flush mounting. For flush mount, the control unit should be fastened to the mounting fixture (supplied with accessories).

For mounting dimensions see the outline drawing at the back of this manual.

1. Fasten the control unit mounting base to the mounting location with two 5X20 tapping screws.
2. Fasten the control unit to the control unit bracket with two M4X12 hex-head screws.
3. Inserting screwdriver through holes at the top of the control unit mounting base, loosely screw in two M4X12 hex-head screws.

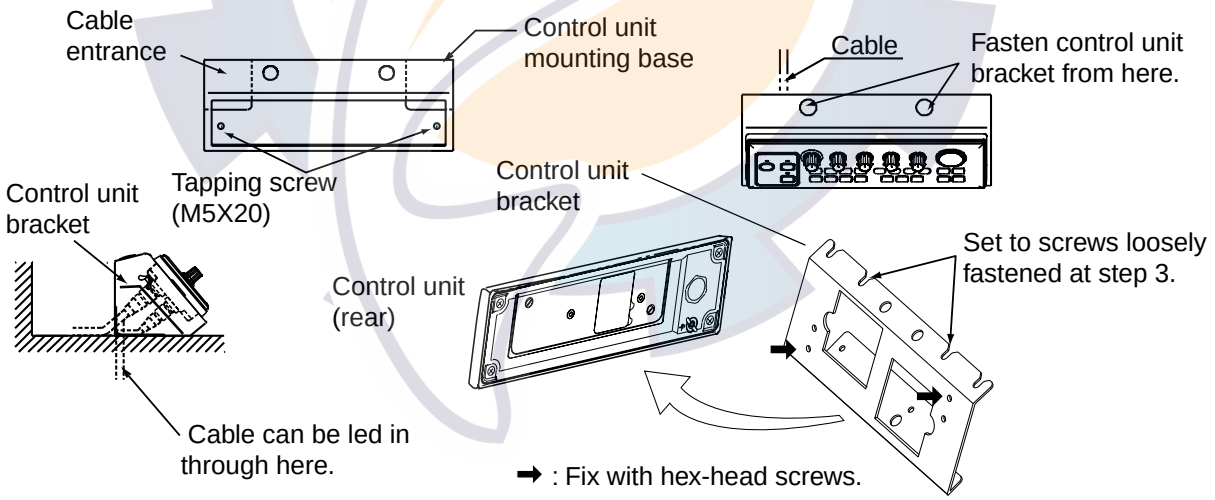

Figure 1-12 How to mount the control unit for blackbox type

4. Set the control unit to the control unit mounting base and fasten hex-head screws inserted at step 3.
5. Set cosmetic plugs (2 pcs.) to the holes at the top of the control unit mounting base.

1.2 Processor Unit

There are two types of Processor Units: CV-1203 (FCV-1200L) and CV-1203M (FCV-1203LM). With the EXIF Board Assy. (standard on FCV-1200LM, optional on FCV-1200L) external equipment such as an echosounder interface, switch box, etc. can be connected.

The unit can be mounted on the deck, a desktop or on a bulkhead. Select a mounting location considering the points below.

- Locate the unit out of direct sunlight.
- Select a location where temperature and humidity are moderate and stable.
- Consider the length of the cable connected between the processor unit and monitor and/or interface unit.
- Locate the unit where its cover can be easily removed and cabling easily accessed.
- For mounting on a bulkhead be sure the mounting location is strong enough to support the unit under the pitching and rolling normally encountered on the vessel.
- Leave sufficient space around the unit for maintenance and servicing. Recommended maintenance space appears in the outline drawing at the back of this manual.

Tabletop or deck mounting: Fasten with four tapping screws.
Bulkhead mounting: Screw in four tapping screws in mounting location, leaving 5 mm protruding. Set the processor unit to the screws and tighten screws.

1.3 Interface Unit

The Interface Unit IF-8000 is supplied with the blackbox-type system, and is optional with the standard type system. It can be mounted on the deck, a desktop or a bulkhead. Select a mounting location for it considering the following:

- Locate the unit away from areas subject to water splash.
- The length of the cable to processor unit is 10 max.
- Leave sufficient space around the unit for maintenance and servicing. Recommended maintenance space appears in the outline drawing at the back of this manual.
- For mounting on a bulkhead be sure the mounting location is strong enough to support the unit under the pitching and rolling normally encountered on the vessel.

Tabletop or deck mounting: Fasten with four tapping screws.
Bulkhead mounting: Screw in tapping screws for the upper fixing holes, leaving 5 mm protruding. Set the interface unit to the screws. Screw in screws for lower fixing holes and tighten. Finally, tighten screws in upper fixing holes.

1.4 Transducer

The performance of the video sounder depends upon the transducer position. A place least affected by air bubbles should be selected since turbulence blocks the sounding path. Further, select a place least influenced by engine noise. It is known that air bubbles are fewest at the place where the bow first falls and the next wave rises, at usual cruising speed. In small, slow-speed boats, the position between 1/3 and 1/2 of the ship's length from the bow is usually a good place.

Note: The face of the transducer must be facing the sea bottom in normal cruising trim of the boat.

1.5 Water Temperature Sensor (option)

Transom mount water temperature sensor T-02 MTB

- Fix the cable at a convenient location on the transom with the cable clamp.
- When the cable is led through the transom board, make a hole of approx. 17 mm in diameter to pass the connector. After passing the cable, seal the hole with a sealing compound.

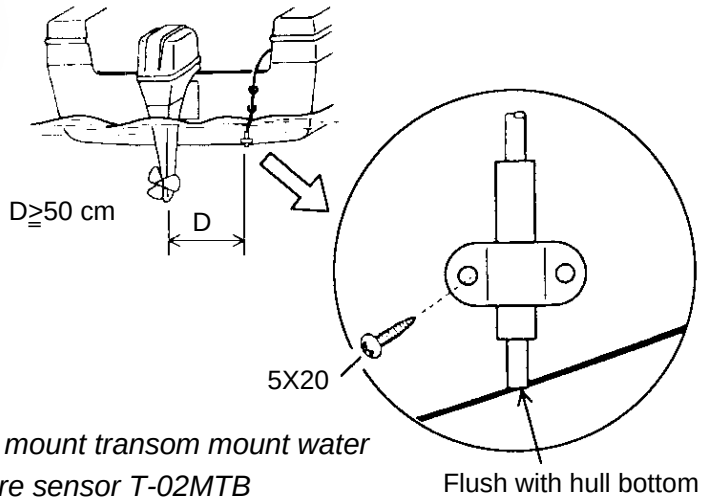

Figure 1-13 How to mount transom mount water temperature sensor T-02MTB

Thru-hull mount water temperature sensor T-02MSB, T-03MSB

Select a suitable mounting location considering the following points:

Select a mid-boat flat position. The sensor does not have to be installed perfectly perpendicular; however, the location should not be such that the transducer may be damaged when the boat is dry-docked.

Locate away from equipment which gives off heat.

Locate away from drain pipes.

Select a location where vibration is minimal.

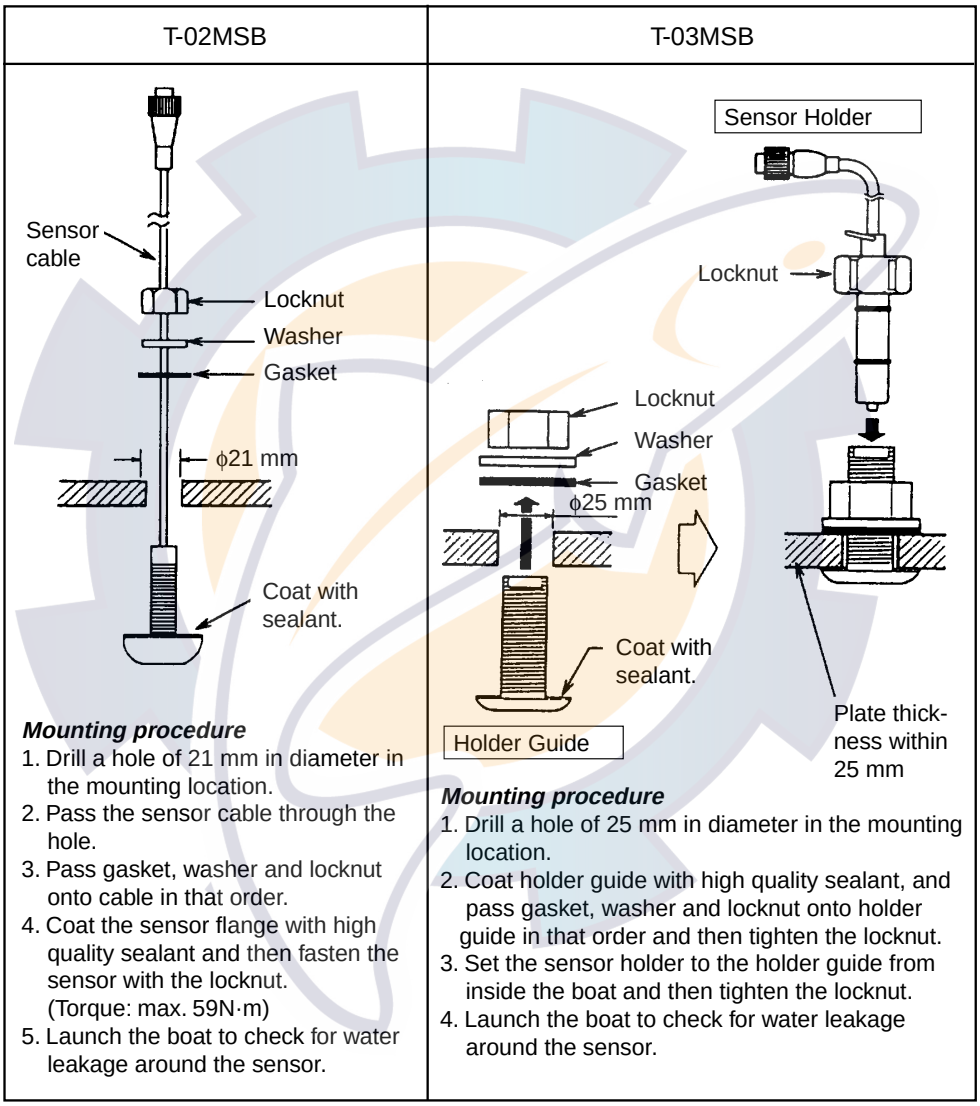

Figure 1-14 Assembling thru-hull water temperature sensor T-02MSB, T-03MSB

1.6 Booster Box (option)

The Booster Box enables connection of a 5 kW transducer (28F-38M, 50F-38). You can also connect a 10 kW transducer (28F-72, 50F-70), however the maximum output power will be 5 kW. For further details see its operator's manual.

2. WIRING

Refer to the interconnection diagram at the back of this manual for detailed information.

If the D-sub connector (used with monitor unit, processor unit, interface unit) is too large to pass through a hole, remove the connector cover. Cover wiring with vinyl tape and pass cable through hole. This will permit passing of the cable through a hole of 30 mm diameter.

Standard-type FCV-1200L

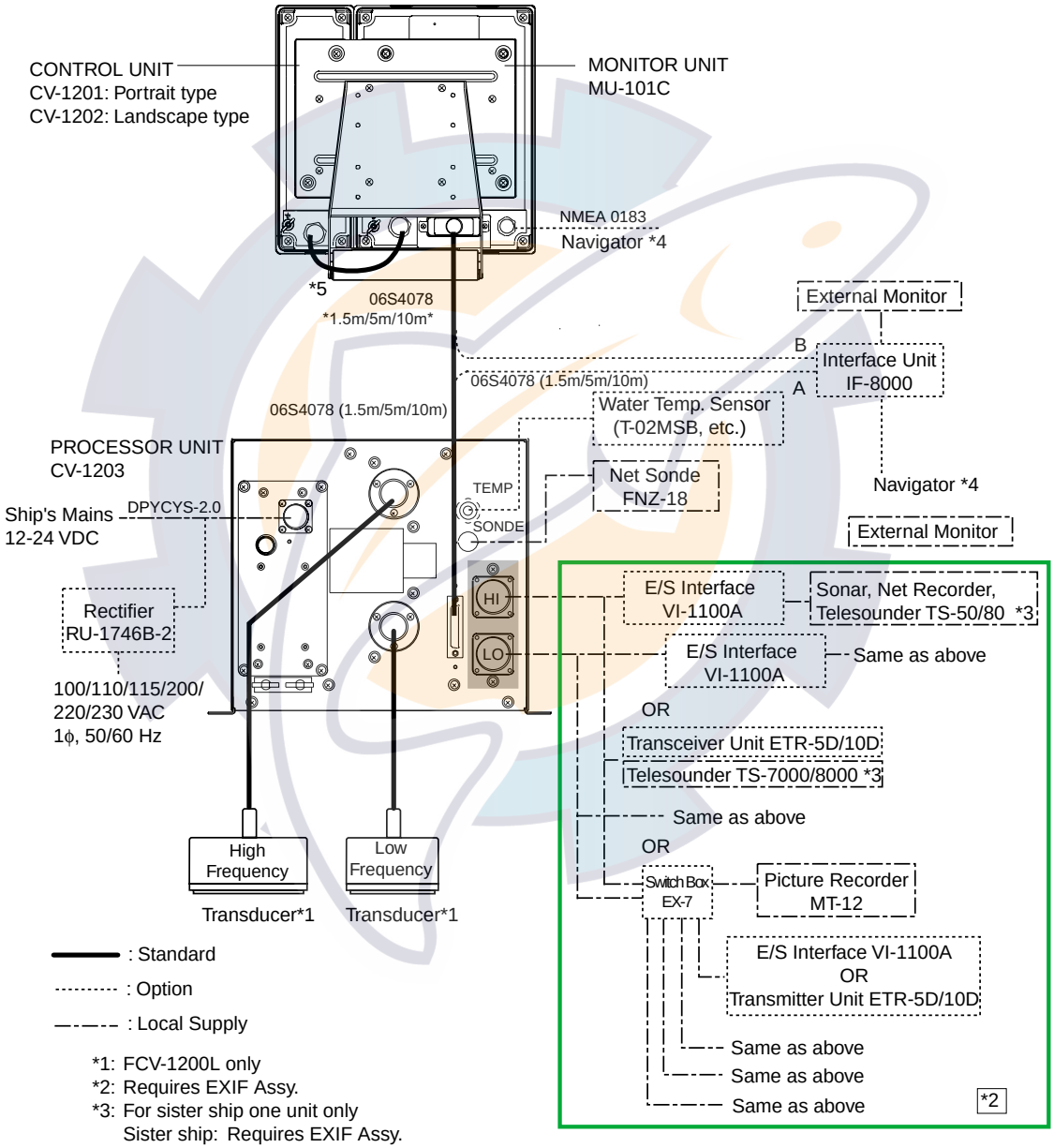

Figure 2-1 Wiring diagram for standard-type FCV-1200L

Blackbox-type FCV-1200L

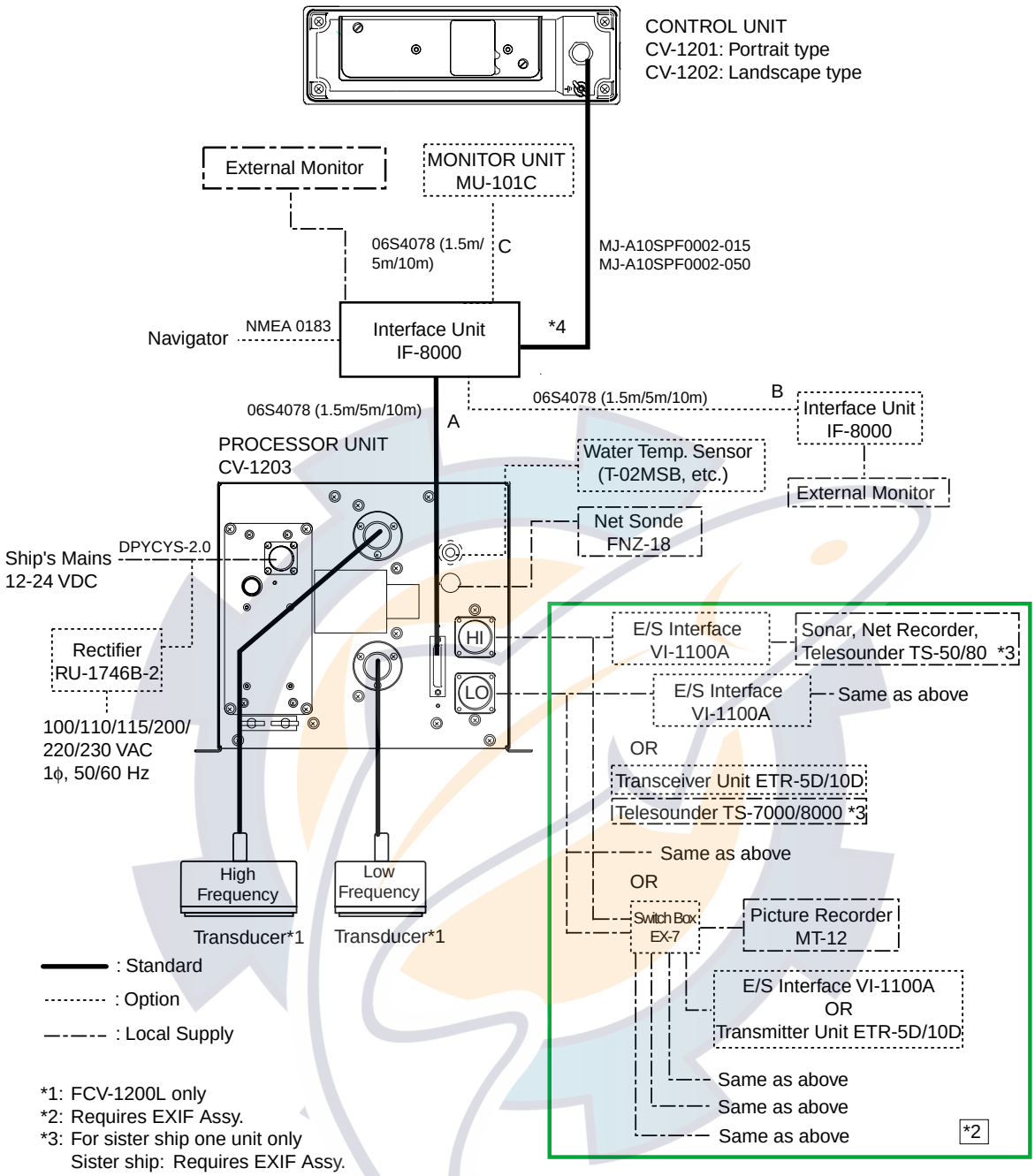

Figure 2-2 Wiring diagram for blackbox-type FCV-1200L

Standard-type FCV-1200LM

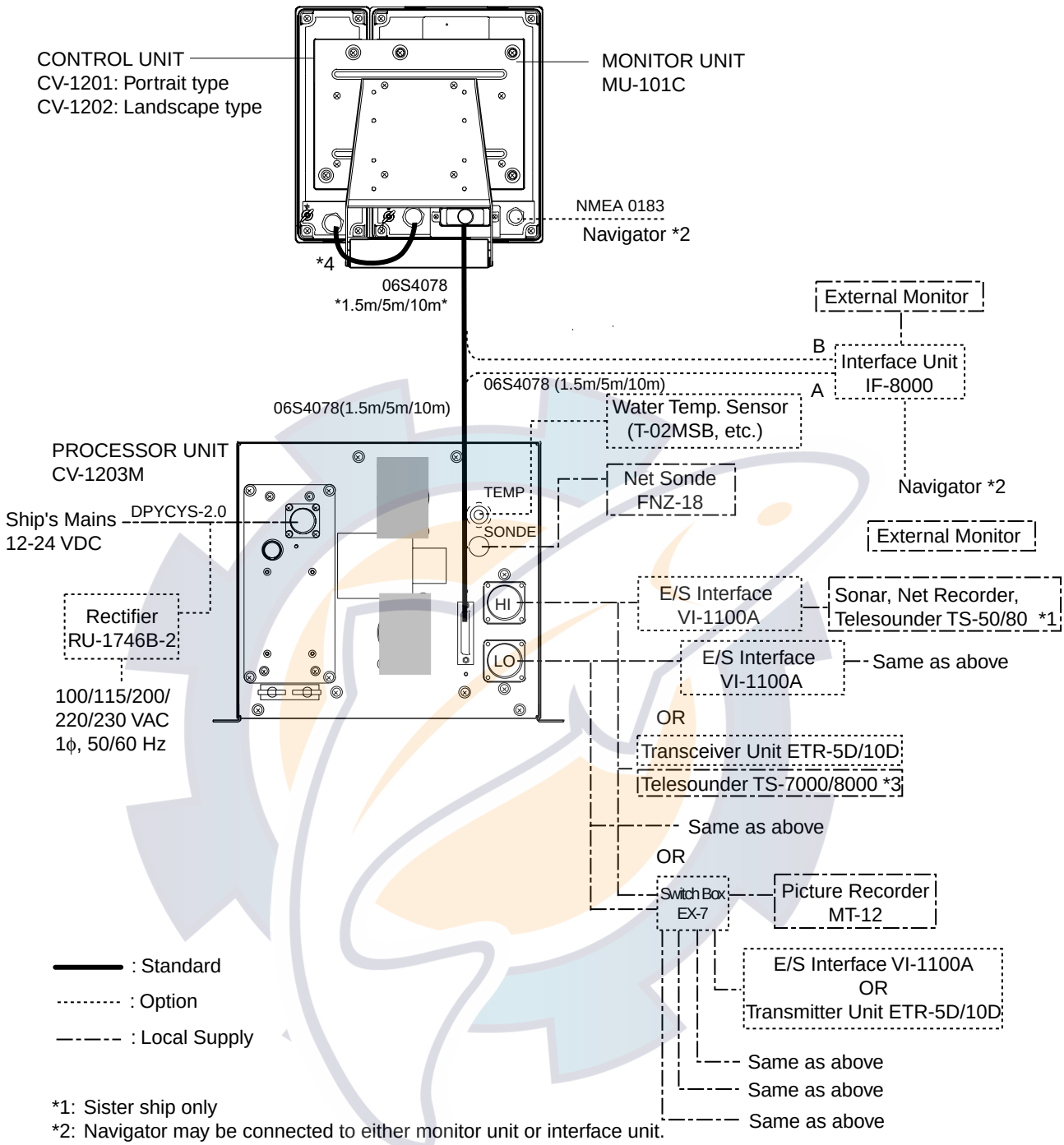

*1: Sister ship only
*2: Navigator may be connected to either monitor unit or interface unit.
*3: Cable between monitor unit and control unit
Unibody - MJ-A10SPF0002-0015
Separate - MJ-A10SPF0002-015, MJ-A10SPF0002-050
*4: A + B ≦ 15 m
A + C ≦ 15 m

Figure 2-3 Wiring diagram for standard-type FCV-1200LM

Blackbox-type FCV-1200LM

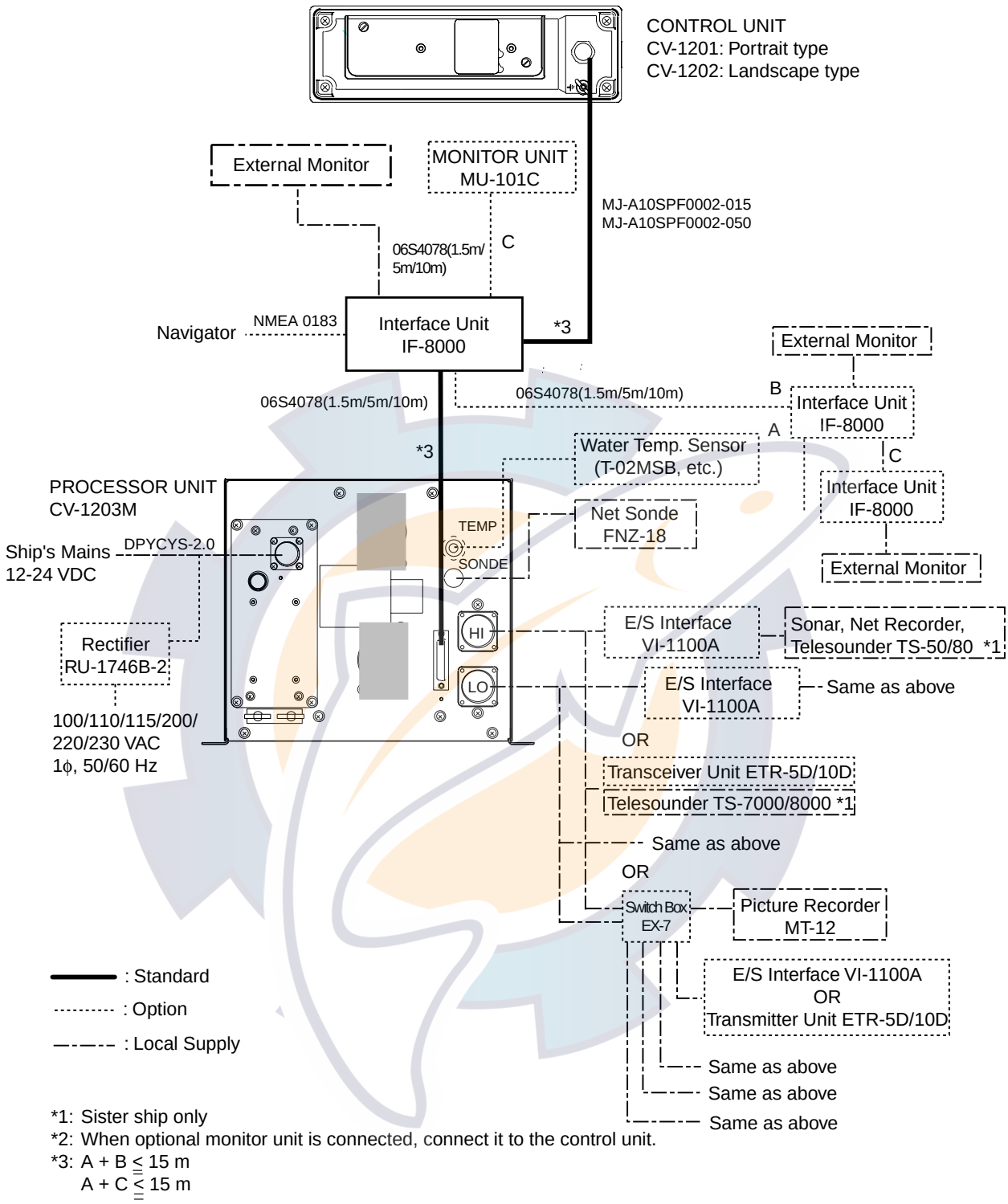

*1: Sister ship only
*2: When optional monitor unit is connected, connect it to the control unit.
*3: A + B ≦ 15 m
A + C ≦ 15 m

Figure 2-4 Wiring diagram for blackbox-type FCV-1200LM

2.1 Wiring Standard Equipment

Transducer (FCV-1200L only)

Separate the transducer cable well away from power cables to prevent interference. Connect the cable to the transducer connector at the rear of the processor unit. Fabricate the cable as below.

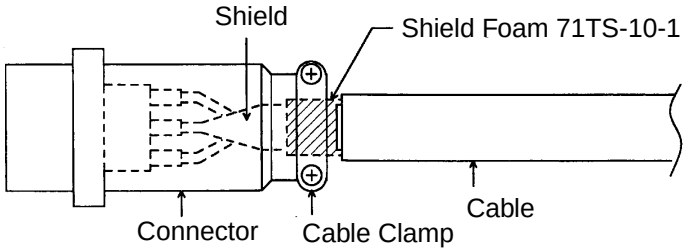

Figure 2-5 Fabrication of transducer cable

Note: For connection of dual-frequency transducer, use cable assy. NCS255AD-254P-L500 (option).

Echosounder interface (FCV-1200LM only)

The Echosounder Interface VI-1100A connects external equipment such as a color video sounder, Transceiver Unit (ETR-5D/ETR-10D), Switch Box EX-7, etc. Attach connector SRCN6A25-24P (supplied) to the signal cable assy. supplied with the Transceiver Unit.

Note 1: For the FCV-1200L, the EXIF board assy. (option) enables connection of external equipment. Connector SRCN6A25-24P is optionally available.

Note 2: Telesounder may be connected to EXT-H or EXT-L.

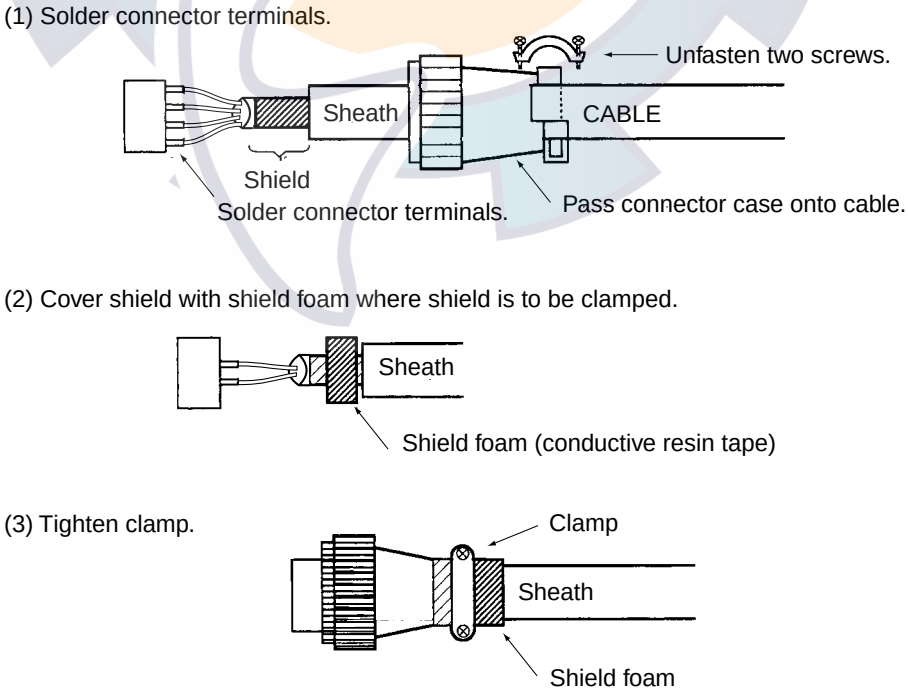

Figure 2-6 Fabrication of cable, connector for echosounder interface

Power cable

This video sounder is designed to be powered with 12-24 VDC power. To prevent power loss, use power cable DPYCYS-2.0 (or equivalent) or equivalent. The armor should lie within the connector case. Confirm polarity when connecting pins.

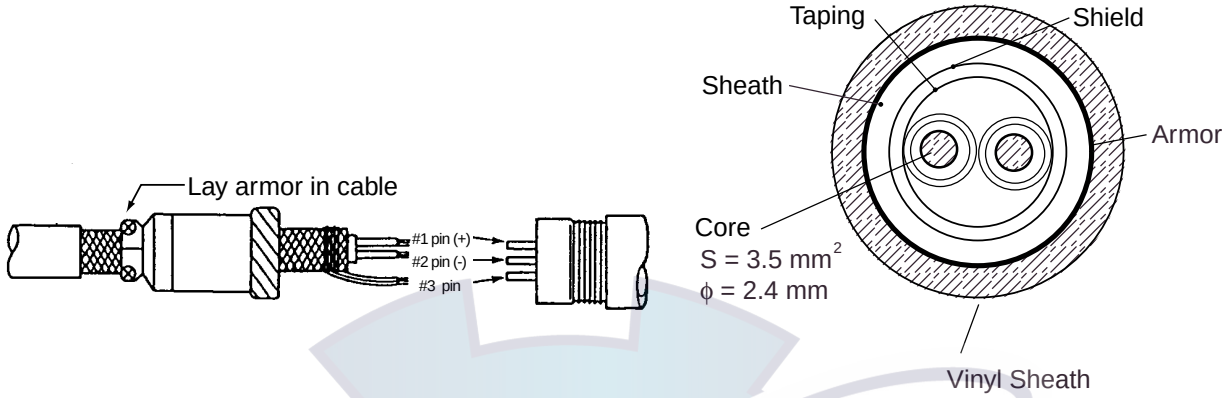

Figure 2-7 Fabrication of power cable

Ground

The processor unit, monitor unit and interface unit should be grounded to prevent mutual interference. Connect an earth plate or earth wire (interface unit) between unit and ship's superstructure to ground.

⚠ CAUTION

Ground the equipment to prevent electrical shock and mutual interference.

Interface unit IF-8000

The Interface Unit IF-8000 is supplied standard with the FCV-1200LM and is optionally available with the FCV-1200L.

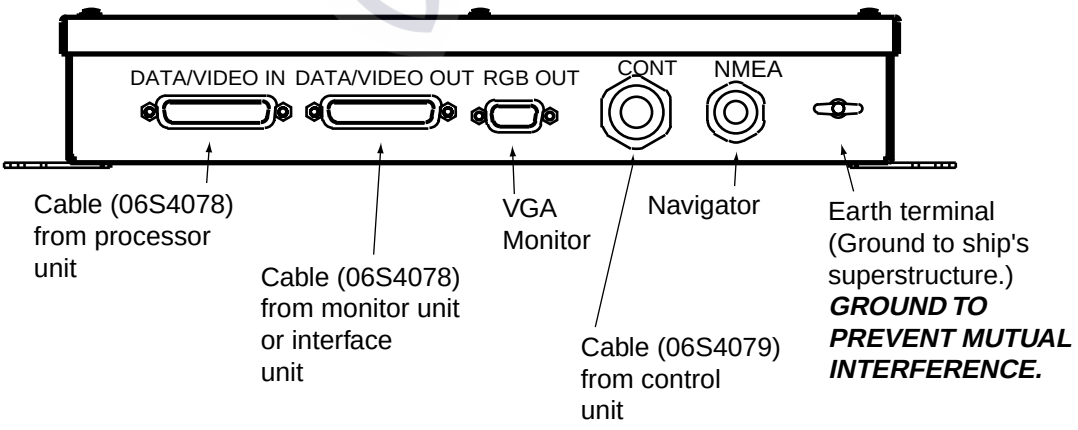

Figure 2-8 Interface unit, rear view

Use a monitor cable (max. length 15 m) to connect a commercial monitor. A D-sub 15P connector with three rows of pins is required for connection at the interface unit. The monitor must satisfy the following requirements:

VGA type
Analog RGB, 0.7Vpp, positive polarity
TTL level H, V, negative polarity

Note 1: Two interface units may be connected.

Note 2: When connecting the Monitor Unit MC-101C or an interface unit to the terminal DATA/VIDEO OUT its connector will touch the connector of DATA/VIDEO IN. To prevent this, cut and remove the rubber covers and fixing metals from the connectors as below to attach them to the interface unit.

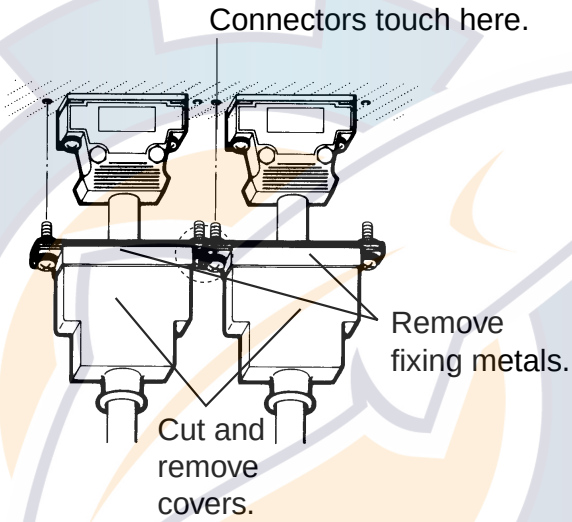

Figure 2-9 Remover fixing metals and covers from connectors of DATA/VIDEO IN and DATA/VIDEO OUT

Note 3: When connecting the interface unit to the Monitor Unit MU-101C or connecting two interface units in parallel, cable lengths should be as below. Further, two cables (type 06S4078) of 10 m in length cannot be used.

2.2 Wiring Optional Equipment

Navigator

Use cable type MJ-A6SPF0011/0012 (option) to connect the navigator to the NMEA connector on the standard LCD monitor unit or Interface Unit in case of blackbox system. For detailed information see the interconnection diagram at the back of this manual.

Water temperature sensor T-02MSB, T-02MTB, T-03MSB

Connect the water temperature sensor cable to the TEMP connector on the processor unit.

Net Sonde FNZ-18

Use connector type FM14-8P (option) and five-pair cable CO-SPEVV-SB-C 0.2X5P (or equivalent, local supply) to connect the Net Sonde to the SONDE connector on the processor unit. Attach the connector to the cable as below.

Analog sonde signal and sonde temperature may also be input. For details see the interconnection diagram at the back of this manual.

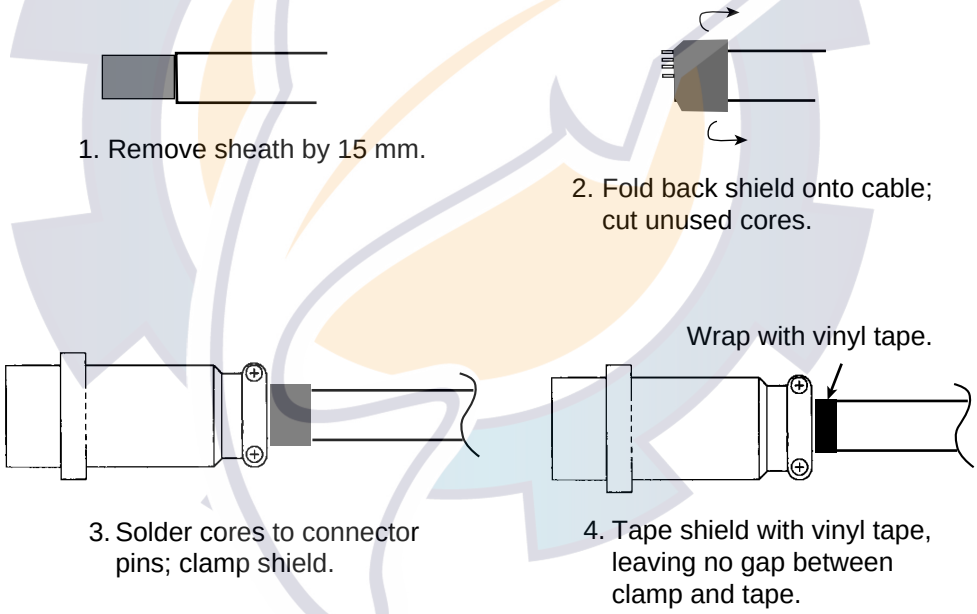

Figure 2-11 Fabrication of cable for net sonde

EXIF board assy.

The EXIF board assy. (type OP02-81, code no. 000-012-463), installed inside the processor unit CV-1203, is necessary when connecting a telesounder (on sister ship and master ship), transceiver or other video sounder to the FCV-1200L. Below are the contents of the EXIF board assy. kit. For connection cable use type S-02-6-10 (24P, 10 m, Code No. 002-962-030).

Name	Type	Code No.	Qty	Remarks
EXIF Assy.	OP02-81	001-413-440	1	
Pan Head Screw	M4X10	000-881-446	3	
SRCN Connector	SRCN6A25-24P	000-508-676	2	

1. Remove the cover of the processor unit by unfastening 13 screws (M4X8).

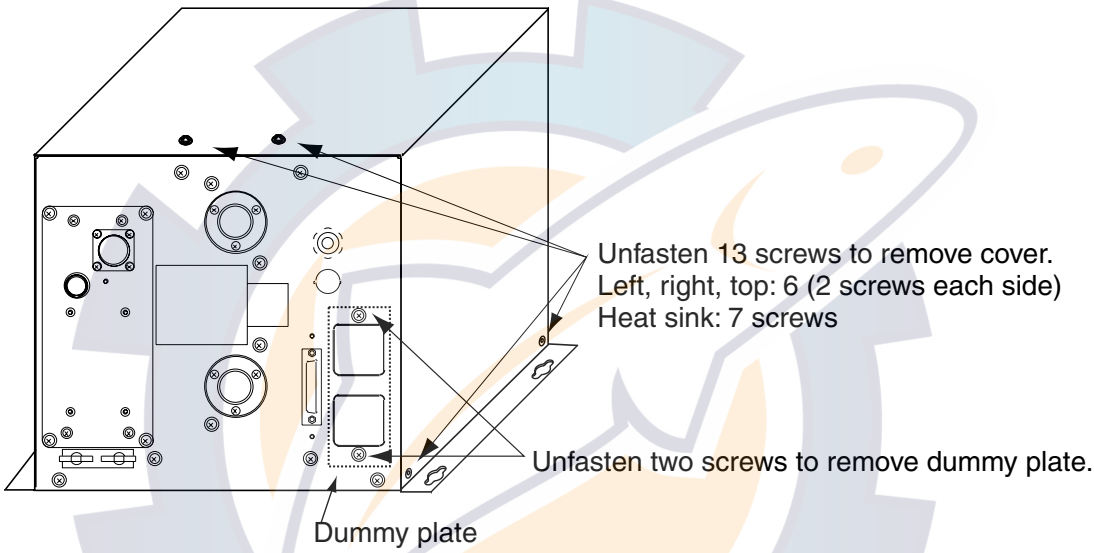

Figure 2-12 Processor unit CV-1203, rear view

2. Unfasten two screws to remove the dummy plate. (The screws and plate may be discarded.)
3. Unfasten screw marked with ▲ in the figure below. (The screw may be discarded.)
4. Fasten the EXIF board assy. to the chassis with three screws (M4X10, supplied).
5. Connect the EXIF Assy. between J1 on the pcb 02P6278 and J7 on the MAIN board.

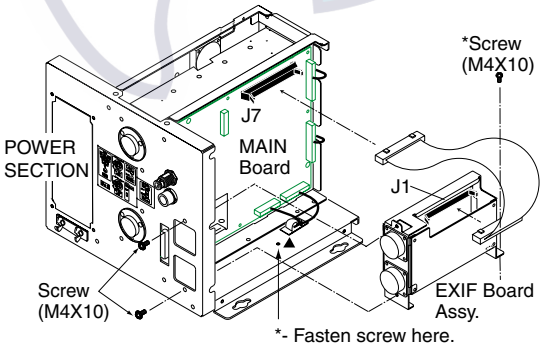

Figure 2-13 Processor unit CV-1203, left side view

6. Set the DIP switches on the circuit board 02P6279, referring to page 3-23.
7. Close the cover.

2.3 Input/Output Sentences

Input sentences

Sentence	Data	Remarks
GGA	Time, position	
GLC	GRI, TD (Loran C)	
GLL	Latitude and longitude	
GTD	TD (Loran C)	
MTW	Water temperature	
RMA	Latitude and longitude, TD (Loran C), ground speed and course	
RMB	Recommended minimum navigation information	
RMC	Latitude and longitude (GPS), ground speed and course	
VTG	Speed through the ground and course	

Output sentences

Sentence	Data	Remarks
DBS	Depth below sea surface	Ver. 1.5
DBT	Depth below transducer	Ver. 1.5
DPT	Depth below transducer	Ver. 2.0
MTW	Water temperature	Ver. 1.5. Ver. 2.0 with connection of water temperature sensor
TLL	Target position	Ver. 2.0
VRM	Water depth	Ver. 1.5. Ver. 2.0

CIF input signal

Signal	Data	Remarks
66	Current (tide) speed, current course	
D3	Sonde water temperature, depth	

3. INITIAL SETTINGS

This section provides the information necessary for initial setup of the equipment. First turn on the power and set display language. For the FCV-1200L, enter transducer used, by model number (FURUNO transducer only) or by specifications. For either model, execute other procedures as applicable.

3.1 Language Setting

1. Turn on the power. The following display appears.

   Note: The picture on your set may be turned 90°. Picture orientation may be corrected at section 3.2.

```
Please set language.
([▲/▼]: Select, [+]: Enter)

XXXXXXXX
XXXXXXXX   (For Japanese customers)

English
XXXXX   (Japanese)
```

Figure 3-1 Initial display screen

2. Press [▲] to select English, and then press the [+] key to set. The following display appears on the FCV-1200L only.

```
Carry out transducer setting.
Press any key to go to Transducer setting menu.
```

3. **FCV-1200L:** Change picture orientation (if necessary) and set transducer type. Then, go to applicable section(s).
   FCV-1200LM: Change picture orientation (if necessary) and turn off the power. Go to section 3.4 and follow the appropriate procedure according to equipment connected (transceiver unit, external video sounder, picture recorder, telesounder). Then, go to other applicable sections.

3.2 Display Type

If your picture is turned 90° do the following:

1. Press any key to show the installation main menu.

```
XDCR SETTING  INSTALLATION  DEMO

XDCR SELECT      : XDCR TYPE

[HIGH] FREQ      : --- kHz
 TRANSDUCER      : -----
PWR REDUCTION    : OFF
 OUTPUT POWER    : -- kW
 SUPPLY VOLT     : -- V

[LOW] FREQ       : --- kHz
 TRANSDUCER      : -----
PWR REDUCTION    : OFF
 OUTPUT POWER    : -- kW
 SUPPLY VOLT     : -- V

[-/+]: Change setting, Turn OFF to exit
```

Figure 3-2 Installation main menu

2. Press [+] to selection INSTALLATION.

```
XDCR SETTING  INSTALLATION  DEMO

MONITOR TYPE     : LANDSCAPE

SOUND SPEED      : 1500.0 m/s (1~2000)

[-/+]: Change setting, Turn OFF to exit
```

Figure 3-3 INSTALLATION menu

3. Press [▾] to select MONITOR TYPE, and then press [+] to open the dialog box.

PORTRAIT LANDSCAPE

4. Use [+] or [-] to select appropriate monitor type, and then press [+] to close the dialog box.
5. Turn off the power.

3.3 Transducer Data (FCV-1200L only)

This paragraph provides information necessary for entering transducer data. You enter transducer data by either transducer model number (for FURUNO transducer, page 3-4) or specification (page 3-5). The FCV-1200L is programmed for use with the following non-FURUNO transducers.

Maker	Frequency	Transducer Type	Remarks
Simrad	38kHz	38E-9-18S1(2kW)	
Airmar	38kHz	38E-M42(3kW)	
Honda	28kHz	28/55/100(3kW)	
	33kHz	36/65/110(3kW)	
	36kHz	32/40(3kW)	
	41kHz	40/75(3kW)	
	50kHz	50/200/400(2kW)	
		50/3K/3F(3kW)	
	55kHz	28/55/100(3kW)	
	60kHz	36/65/110(3kW)	
	67kHz	40/75(3kW)	
	100kHz	28/55/100(3kW)	
	118kHz	36/65/110(3kW)	
	200kHz	50/200/400(2kW)	
	400kHz	50/200/400(2kW)	
Suzuki	50kHz	TGM50/200	Same as FURUNO 50/200-1T(1kW)
	200kHz	TGM50/200	

⚠ CAUTION

Set the transducer model number properly.

Wrong transducer setting can damage the transducer and void the warranty.

⚠ CAUTION

Do not enter transducer data by specifications if model number of transducer used is programmed in the equipment.

Wrong transducer setting can damage the transducer and void the warranty.

Entering transducer data by transducer model number

Note 1: If you are continuing from paragraph 3.1 go to step 2.

Note 2: If you have already entered transducer settings and want to reconfirm them turn on the power while pressing any key.

1. Turn on the power.
2. Press any key to show the following menu.

```
XDCR SETTING  INSTALLATION  DEMO

XDCR SELECT      : XDCR TYPE

[HIGH] FREQ      : --- kHz
 TRANSDUCER      : -----
 TX POWER        : MAX
 OUTPUT POWER    : -- kW
 SUPPLY VOLT     : -- V

[LOW] FREQ       : --- kHz
 TRANSDUCER      : -----
 TX POWER        : MAX
 OUTPUT POWER    : -- kW
 SUPPLY VOLT     : -- V

[-/+]: Change setting, Turn OFF to exit
```

Figure 3-4 Installation main menu

3. Press [▼] to select [HIGH] FREQ or [LOW] FREQ (whichever is installed), and then press [+] to show the dialog box. (The appearance of the dialog box depends on the type of monitor unit used.) The scroll bar at the bottom of the dialog box shows cursor position in relation to the entire menu.

```
15 kHz  28 kHz  33 kHz  36 kHz  38 kHz  41 kHz  45 kHz  50 kHz
◀ ═══════════════════════════════════ ▶
```

Scroll bar

4. Press [+] or [-] to select transducer frequency, and then press [▲] or [▼] to close the dialog box.
5. Press [▼] to select TRANSDUCER, and then press [+] to open the dialog box. The dialog box below is for the 200 kHz transducer.

```
200B-5S (1kW)  50/200-1ST (1kW)  50/200-1T (1 kW)  200B-8/8B (2 kW)
◀ ═══════════════════════ ▶
```

6. Press [+] or [-] to select model number, and then press [▲] or [▼] to close the dialog box.
7. To operate the transducer in reduced power (for example, when vessel is in dry dock), press [▼] to select TX POWER, and then press [+] to open the dialog box.

MAX	1/2	1/4	1/8	1/16	MIN

8. Press [+] or [-] to select appropriate power, and then press [▲] or [▼] to close the dialog box. Normally set to MAX. MIN means transmission power less than 1W.
9. Follow steps 1-6 to enter model number of other transducer if installed.

   Note: For dual-frequency transducer, enter both high and low frequencies and set the same transducer model number for both high and low frequencies.

10. Confirm settings and turn off the power.

Note: If the system detects frequency mismatch the message “Frequency unmatch error! Press any key to go to Transducer setting menu.” appears at the next powering of the equipment. Press any key to go to the transducer setting menu and reenter transducer data.

Entering transducer data by transducer specifications

For new transducer or other make of transducer see FURUNO Information for further information.

Note 1: If you are continuing from paragraph 3.1 go to step 2.

Note 2: If you have already entered transducer settings and want to reconfirm them turn on the power while pressing any key.

1. Turn on the power.
2. Press any key.
3. Press [▼] to select XDCR SELECT, and then press [+] to show the dialog box below.

TYPE	MANUAL

4. Press [+] to select MANUAL, and then press [▲] or [▼] to close the dialog box. The display should now look something like the one below.

```
XDCR SETTING  INSTALLATION  DEMO

XDCR SELECT     :  MANUAL

[HIGH] FREQ     :  --- kHz
 SUPPLY VOLT    :  --- V
 TX POWER       :  MAX

[LOW] FREQ      :  --- kHz
 SUPPLY VOLT    :  --- V
 TX POWER       :  MAX

 INVERTER FREQ  :  STD (62/125/188 kHz)
NOTE: Don't select the item which is
within  +/- 3kHz of power supply freq.

Select how to set XDCR type.

[-/+]: Change setting, Turn OFF to exit
```

Figure 3-5 Menu for manual entry of transducer specifications

5. Do the following for both the high and low frequency transducers, or whichever transducer is installed.
   a) Press [▼] to select [HIGH] FREQ or [LOW] FREQ, and then press [+] to open the dialog box.

      --- kHz

   b) Press [+] or [-] to enter transducer frequency, and then press [▲] or [▼] to close the dialog box.
   c) Press [▼] to select SUPPLY VOLT, and then press [+] to open the dialog box.

      --- V

   d) Press [+] or [-] to enter transducer supply voltage, and then press [▲] or [▼] to close the dialog box.
   e) To operate the transducer in reduced power (for example, when vessel is in dry dock), press [▼] to select TX POWER, and then press [+] to open the dialog box.

      MAX 1/2 1/4 1/8 1/16 MIN

   f) Press [-] to select MAX and then press [▲] or [▼] to close the dialog box.
   g) If the transducer frequency and power frequency are the same, noise will be present in the picture. To prevent this, change the inverter (power) frequency. Press [▼] to select INVERTER FREQ, and then press [+] to open the dialog box.

      LO(59/118/177kHz) STD(62/125/188kHz) HI(66/132/198kHz)

6. Press [+] or [-] to select appropriate power frequency, and then press [▲] or [▼] to close the dialog box.
7. Confirm settings and turn off the power.

3.4 Adjustment for Transceiver Unit, Video Sounder, Telesounder, Picture Recorder

This section provides the settings necessary when connecting a Transceiver Unit (ETR-5D, ETR-10D, etc.), Color Video Sounder, Telesounder (TS-30/507000/8000) or the Picture Recorder MT-12.

Note 1: For the FCV-1200L, first install the EXIF board assy. See page 2-7.
Note 2: For the FCV-1200LM, only a master ship's telesounder can be connected. Further, the Picture Recorder MT-12 can only play back the echosounder signal; it cannot be used for recording.

Transceiver unit, video sounder

1. Turn on the power.
2. Turn the [FUNCTION] switch to the MENU position.
3. Press [▲] and [+] to select SYSTEM at the top of the screen.

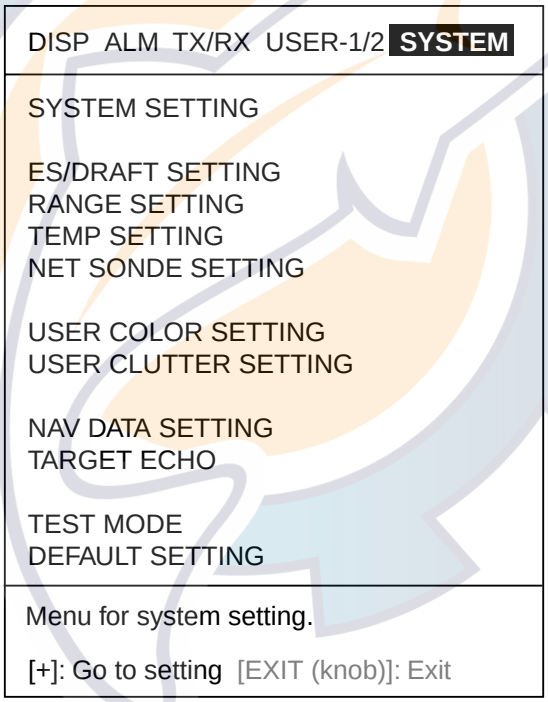

Figure 3-6 SYSTEM menu

4. Press [▼] to select E/S DRAFT SETTING, and then press [+] to open that menu.

```
DISP  ALM  TX/RX  USER-1/2 [SYSTEM]

[E/S DRAFT SETTING]

<High Frequency>
XDCR CONNECT  :  INTERNAL
TX POWER      :  MAX
DRAFT         :  +0.0 ft (-15~+90)
FREQ CHOICE   : **kHz
<Low Frequency>
XDCR CONNECT  :  INTERNAL
TX POWER      :  MAX
DRAFT         :  +0.0 ft (-15~+90)
FREQ CHOICE   : ***kHz
E/S SIG OUT   :  OFF
KP SETTING    :  INTERNAL

Select transducer connected.
[-/+]: Change set, [EXIT (knob)]: Exit
```

Figure 3-7 E/S DRAFT SETTING menu

5. Do the following for both the high and low frequencies, or whichever is installed.

   a) Select XDCR CONNECT, and then press [+] to open the dialog box.

```
INTERNAL  ETR TS/OTHER
```

   b) Select INTERNAL or ETR referring to the table below, and then press [▲] or [▼] to close the dialog box.

Equipment connected	E/S DRAFT SETTING menu item	
	XDCR CONNECT	E/S SIG OUT
Transceiver Unit	ETR	OFF
External Video Sounder	INTERNAL	LF, HF, LF/HF

   c) If the transceiver or external video sounder is to be used when vessel is in dry dock, select TX POWER and press [+] to open the dialog box.

```
MAX  1/2  1/4  1/8  1/16  MIN
```

   d) Press [+] to select appropriate power, and then press [▲] or [▼] to close the dialog box.

For transceiver unit

1. Do the following for both high and low frequencies, or whichever is installed.
   a) Use [▲] or [▼] to select DRAFT and press [+] to open the dialog box.

   +0.0

   b) Use [+] or [-] to enter ship's draft, and then press [▲] or [▼] to close the dialog box.
2. Press [▼] to select E/S SIG OUT, and then press [+] to open the dialog box.

   OFF LF HF LF/HF

3. Select OFF, and then press [▲] or [▼] to close the dialog box.
4. Turn the [FUNCTION] switch to the EXIT position to quit.

For external video sounder

1. Turn the [FUNCTION] switch to the EXIT position.
2. Do the following for both the high and low frequencies, or whichever is installed.
   a) Set the [MODE] switch in the LF, HF or DUAL (dual-frequency transducer only) position.
   b) Measure how many feet the transmission line is shifted, by using the VRM marker.
   c) If the transmission line is shifted go to step 3, and if it has not shifted, go to step 6.
3. Turn the [FUNCTION] switch to the MENU position.
4. Press [▲] and [+] to show the SYSTEM menu.
5. Do the following for both the high and low frequencies, or whichever is installed.
   a) Use [▲] or [▼] to select DRAFT, and then press [+] to open the dialog box.

   +0.0

   b) Use [+] or [-] to enter value measure at step 2, and then press [▲] or [▼] to close the dialog box.
6. Press [▼] to select E/S SIG OUT, and then press [+] to open the dialog box.

   OFF LF HF LF/HF

7. Select LF, HF or LF/HF as appropriate, and then press [▲] or [▼] to close the dialog box.
8. Press [▼] to select KP SETTING and [+] to open the dialog box.

   INTERNAL EXTERNAL

9. Press [+] to select EXTERNAL, and then press [▲] or [▼] to close the dialog box.
10. Turn the [FUNCTION] switch to the EXIT position to quit.

Telesounder

The FCV-1200LM can only be connected to a telesounder on board a master ship and the FCV-1200L to a telesounder on board a master ship or sister ship.

1. Turn on the power.
2. Turn the [FUNCTION] switch to the MENU position.
3. Press [▲] and [+] to select SYSTEM at the top of the screen.
4. Press [▼] to select E/S DRAFT SETTING, and then press [+] to open that menu.
5. Do the following for both the high and low frequencies, or whichever is installed.
   a) Select XDCR CONNECT, and then press [+] to open the dialog box.

   INTERNAL ETR TS/OTHER

   b) Select TS / OTHER or INTERNAL referring to the table below, and then press [▲] or [▼] to close the dialog box.

Equipment connected	E/S DRAFT SETTING menu item	
	XDCR CONNECT	E/S SIG OUT
Telesounder installed on sister ship	INTERNAL	LF/HF
Telesounder installed on master ship	TS / OTHER	OFF

6. Press [▼] to select E/S SIG OUT, and then press [+] to open the dialog box.

   OFF LF HF LF/HF

7. Select OFF, LF, HF, LF/HF referring to the table above.
8. Press [▲] or [▼] to close the dialog box.
9. Follow the procedure below to set up for telesounder installed on a master ship, or turn the [FUNCTION] switch to the EXIT position to quit.

Do the following for telesounder installed on master ship

1. Turn the [FUNCTION] switch to the EXIT position.
2. Do the following for both the high and low frequencies, or whichever is installed.
   a) Set the [MODE] switch in the LF, HF or DUAL (dual-frequency only) position.
   b) Measure how many feet the transmission line is shifted, by using the VRM marker.
   c) If the transmission line is shifted go to step 3, and if it has not shifted, go to step 6.
3. Turn the [FUNCTION] switch to the MENU position.
4. Press [▲] and [+] to show the SYSTEM menu.

5. Do the following for both the high and low frequencies, or whichever is installed.
   a) Use [▲] or [▼] to select DRAFT, and then press [+] to open the dialog box.

   +0.0

   b) Enter value measured at step 2 with [+] or [-], and then press [▲] or [▼] to close the dialog box.

Final adjustment (master ship and sister ship)

1. Observer the picture from the sister ship and master ship. The dynamic range of the signal received at the telesounder is about 6 dB less than that of the raw signal, so set the clutter control on the telesounder between 2 and 3. This should produce the same picture on both the master and sister ships.
2. Turn the [FUNCTION] switch to the EXIT position to quit.

Picture recorder

The FCV-1200L can only playback the echosounder signal; FCV-1200LM can record and play back the echosounder signal.

1. Turn on the power and turn the [FUNCTION] switch to the MENU position.
2. Press [▲] and [+] to select SYSTEM at the top of the screen.
3. Press [▼] to select E/S DRAFT SETTING, and then press [+] to open that menu.
4. Do the following for both the high and low frequencies, or whichever is installed.
   a) Select XDCR CONNECT, and then press [+] to open the dialog box.

   INTERNAL ETR TS/OTHER

   b) Select INTERNAL or TS / OTHER referring to the table below, and then press [▲] or [▼] to close the dialog box.

Equipment connected	E/S DRAFT SETTING menu item	
	XDCR CONNECT	E/S SIG OUT
Record	INTERNAL	LF + HF
Playback	TS / OTHER	OFF

5. Press [▼] to select E/S SIG OUT, and then press [+] to open the dialog box.

   OFF LF HF LF/HF

6. Select appropriate option referring to the table above, and then press [▲] or [▼] to close the dialog box.
7. Turn the [FUNCTION] switch to the EXIT position to quit.

3.5 Water Temperature Sensor Setting

If a water temperature sensor is connected set up as follows:

1. Turn on the power and turn the [FUNCTION] switch to the MENU position.
2. Press [▲] and [+] to select SYSTEM at the top of the screen.
3. Press [▼] to select TEMP SETTING, and then press [+] to open that menu.

```
DISP  ALM  TX/RX  USER-1/2 [SYSTEM]

[TEMP SETTING]

TEMP INPUT      : SENSOR
TEMP ADJUST     : +0.0˚F (-20~+20)

TEMP READOUT    : ON

TEMP GRAPH      : OFF
TEMP COLOR      : STD

Select temperature sensor.

[-/+]: Change set, [EXIT (knob)]: Exit
```

Figure 3-8 TEMP SETTING menu

4. The cursor is selecting TEMP INPUT; press [+] to open the dialog box.

```
SONDE  SENSOR  NMEA  CIF
```

5. Use [+] or [-] to select source of water temperature data, and then press [▲] or [▼] to close the dialog box.

   SONDE: FURUNO Net Sonde FNZ-18 inputs water temperature data.
   SENSOR: Water temperature sensor T-02MSB, T-02MTB or T-03MSB inputs water temperature data. This is the default setting.
   NMEA: Water temperature data input from navigation equipment.
   CIF: Water temperature data input from CIF of Net Sonde.

6. **For FURUNO make water temperature sensor or Net Sonde,** you may offset water temperature data to further refine its accuracy. This must be done with the boat in water.

   a) Press [▼] to select TEMP ADJUST, and then press [+] to open the dialog box.

```
+0
```

   b) Watch the water temperature readout on the monitor (if it is not displayed set TEMP READOUT to ON) and compare it with known value.

c) Use [+] or [-] to enter the difference found in b) above. For example, if the indication of the FCV-1200L is +5° higher than the actual value, enter –5 (degrees).

d) Press [▲] or [▼] to close the dialog box.

7. Press [▼] to select TEMP READOUT, and then press [+] to open the dialog box.

OFF **ON**

8. Use [-] or [+] to turn the water temperature indication OFF or ON (default setting) respectively, and then press [▲] or [▼] to close the dialog box.

9. Press [▼] to select TEMP GRAPH, and then press [+] to open the dialog box.

OFF NARROW STD EXPAND

10. Use [+] or [-] to select the temperature scale graduation interval, and then press [▲] or [▼] to close the dialog box.

OFF: No water temperature graph
NARROW: Graduation every 2°
STD: Graduation every 2.5° (default setting)
EXPAND: Graduation every 5.0°

11. Press [▼] to select TEMP COLOR and [+] to open the dialog box.

STD WHITE RED BLACK YELLOW

12. Use [+] or [-] to select the color of the water temperature graph for STD (blue in default setting but color depends on color setting), WHITE, RED, BLACK or YELLOW as appropriate, and then press [▲] or [▼] to close the dialog box.

13. Turn the [FUNCTION] switch to EXIT position to quit.

3.6 Net Sonde Setting

Follow the procedure below when a Net Sonde is connected to the video sounder.

1. Turn on the power and turn the [FUNCTION] switch to the MENU position.
2. Press [▲] and [+] to select SYSTEM at the top of the screen.
3. Press [▼] to select NET SONDE SETTING, and then press [+] to open that menu.

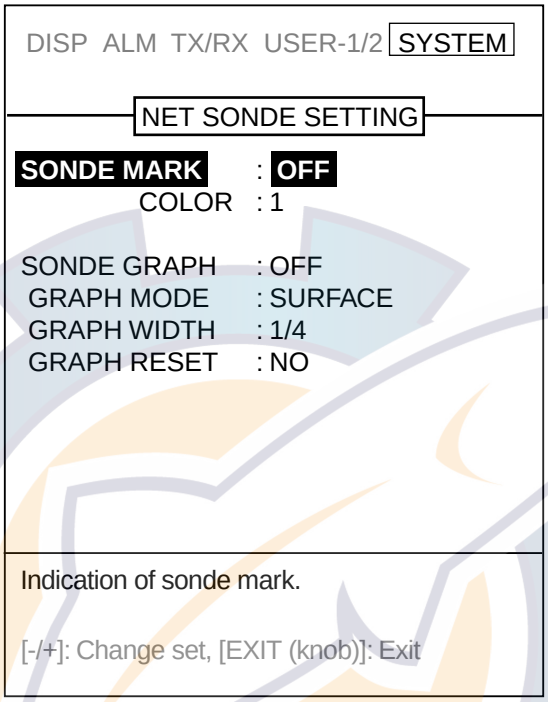

Figure 3-9 NET SONDE SETTING menu

4. The cursor is selecting SONDE MARK; press [+] to open the dialog box.

5. Use [+] or [-] to select where to display the sonde marker: OFF, no sonde marker displayed; LF, low frequency picture, HF, high frequency picture.
6. Press [▲] or [▼] to close the dialog box.
7. Press [▼] to select COLOR, and then press [+] to open the dialog box.

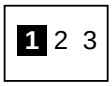

8. Use [+] or [-] to select echo level to display, and then press [▲] or [▼] to close the dialog box.
   1: Echo of color level 14 (Reddish-brown in standard color arrangement, default setting)
   2: Echo of color level 12 (Red in standard color arrangement)
   3: Echo of color level 10 (Orange in standard color arrangement)

9. Press [▼] to select SONDE GRAPH, and then press [+] to open the dialog box.

OFF ON

10. Use [-] or [+] to turn the graph display OFF (default setting) or ON as appropriate, and then press [▲] or [▼] to close the dialog box.
11. Press [▼] to select GRAPH MODE, and then press [+] to open the dialog box.

SURFACE BOTTOM

12. Use [-] or [+] to select what temperature to use for the graph, and then press the [▲] or [▼] to close the dialog box.

    SURFACE: First-written water temperature (surface condition, default setting)
    BOTTOM: Last-written water temperature (net sonde position)

13. Press [▼] to select GRAPH WIDTH, and then press [+] to open the dialog box.

1/4 1/2

14. Use [+] or [-] to set width of the sonde graph as desired, and then press [▲] or [▼] to close the dialog box.

    1/4: 1/4 of screen width (default setting)
    1/2: 1/2 of screen width

15. Turn the [FUNCTION] switch to EXIT position to quit.

3.7 Nav Data, Heading Sensor Setting

Select navigator and heading sensor used as below.

1. Turn on the power and turn the [FUNCTION] switch to the MENU position.
2. Press [▲] and [+] to select SYSTEM at the top of the screen.
3. Press [▼] to select NAV DATA SETTING, and then press [+] to open that menu. (If a heading sensor is connected but not a navigator, go to step 10.)

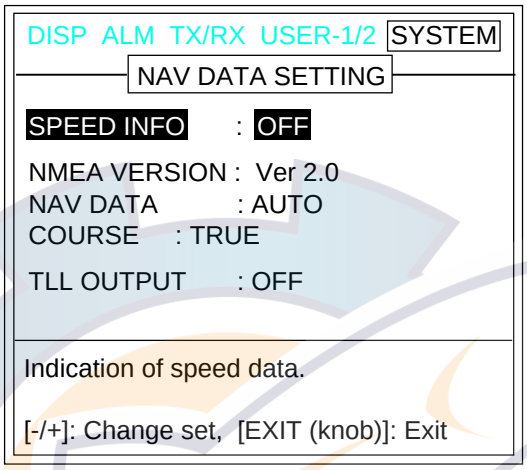

Figure 3-10 NAV DATA SETTING menu

4. The cursor is selecting SPEED INFO; press [+] to open the dialog box.

5. Use [-] or [+] to turn the speed indication OFF (default setting) or ON, and then press [▲] or [▼] to close the dialog box.
6. Press [▼] to select NMEA VERSION, and then press [+] to open the dialog box.

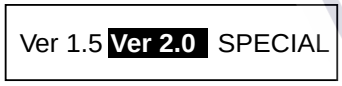

7. Use [+] or [-] to select NMEA version no. (default setting is Ver 2.0) of the navigator, and then press [▲] or [▼] to close the dialog box. If you are unsure of the version no., try both to see which one successfully receives position data. SPECIAL is for use with a navigator which has a baud rate of 600 bps.

8. Press [▼] to select NAV DATA, and then press [+] to open the dialog box.

LC	LA	DECCA	GPS	DR	**AUTO**

9. Use [-] or [+] to select type of navigator connected, and then press [▲] or [▼] to close the dialog box. AUTO (default setting) selects a navigator in the order of GPS, Loran C, Loran A, Decca, DR (Dead Reckoning).
10. Press [▼] to select COURSE, and then press [+] to open the dialog box.

TRUE	MAG

11. Use [-] or [+] to select TRUE or MAG (magnetic bearing) as appropriate, and then press [▲] or [▼] to close the dialog box. TRUE is the default setting. If no navigator is connected, turn the [FUNCTION] switch to other position to quit.
12. Press [▼] to select TLL (Target Latitude, Longitude) OUTPUT, and then press [+] to open the dialog box.

OFF	ON

13. TLL OUTPUT enables or disables output of position data from the video sounder to external equipment, at the moment the [MARKER TLL] key is pressed. Use [+] or [-] to select ON or OFF (default setting) as appropriate, and then press [▲] or [▼] to close the dialog box.
14. Turn the [FUNCTION] switch to EXIT position to quit.

3.8 Propagation Velocity

This section provides the information for adjustment of propagation velocity. Normally, no adjustment is necessary, however if the depth indication is wrong, lower or raise propagation velocity as appropriate.

1. Turn on the power while pressing any key to show the installation main menu.
2. Press [+] or [-] to select the INSTALLATION menu.

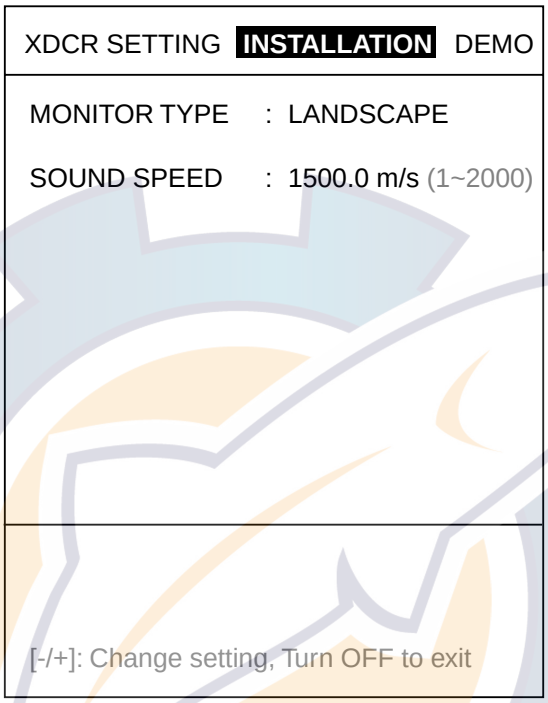

Figure 3-11 INSTALLATION menu

3. Press [▼] to select SOUND SPEED, and then press [+] to open the dialog box.

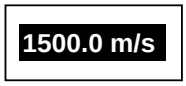

4. Use [+] or [-] to enter value, and then press [▲] or [▼] to close the dialog box. The default setting is 1500.0 (m/s) and the setting range is 1-2000 (m/s).
5. Turn off the power to quit.

3.9 Demonstration Mode

The demonstration mode provides a simulated video sounder picture. Connection of the transducer is not necessary. All controls are operational.

1. Turn on the power while pressing any key to display the installation main menu.
2. Press [+] to select DEMO.

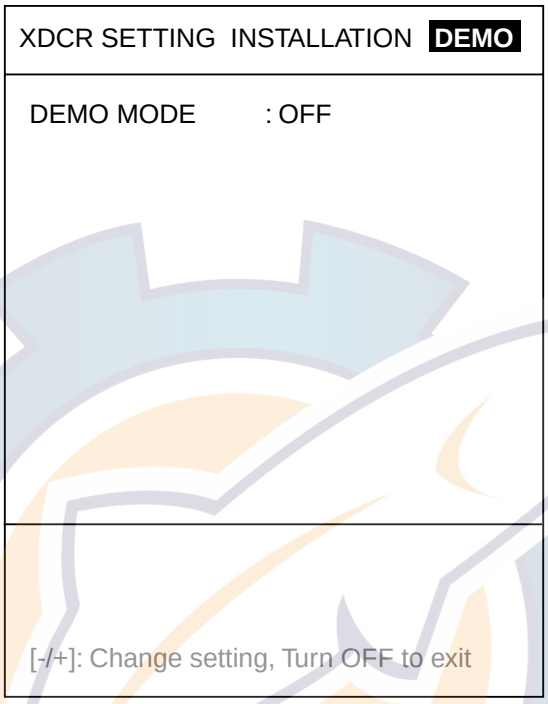

Figure 3-12 DEMO menu

3. Press [▼] to select DEMO MODE, and then press [+] to open the dialog box.

4. Use [+] or [-] to select ON or OFF (default setting) as appropriate, and then press [▲] or [▼] to close the dialog box.
5. Turn off the power.
6. Turn on the power. “<DEMO>” appears at the bottom of the screen when the demonstration mode is on.

3.10 Restoring Default Settings

The procedure below restores most default settings. The following settings are not affected: target setting, language, demo mode, monitor type (portrait, landscape), transducer settings, user color settings and user clutter settings.

1. Turn on the power and turn the [FUNCTION] switch to the MENU position.
2. Press [▲] and [+] to select SYSTEM at the top of the screen.
3. Press [▼] to select DEFAULT SETTING, and then press [+] to open that menu.

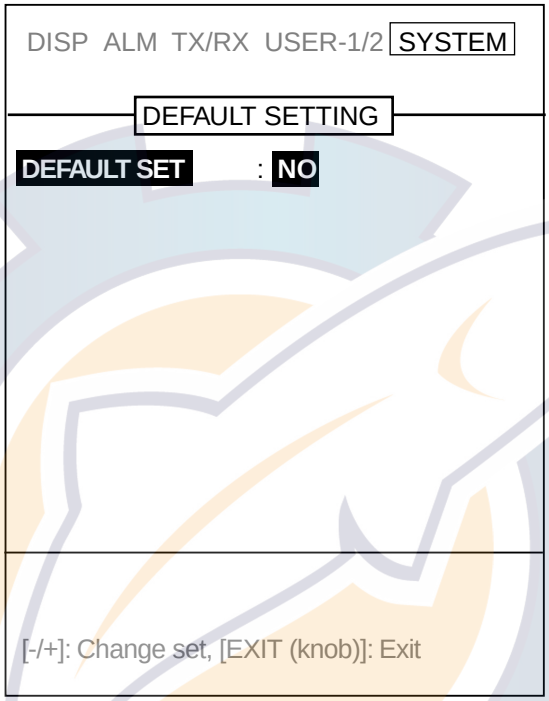

Figure 3-13 DEFAULT SETTING menu

4. Press [+] to open the dialog box.

   [-]: NO [+]: YES

5. Press [+] to restore default settings.
6. Three beeps sound and then normal operation is restored.

3.11 DIP Switch Setting

Interface unit IF-8000

When connecting the MU-101C (Display Unit) to the DATA/VIDEO OUT port (J2), turn off all segments of DIP Switch S1. If there is no equipment connected to the DATA/VIDEO OUT port, turn on all segments of DIP Switch S1 (default setting: all segments off). Turning on the segments of S1 connects all final stage resistors.

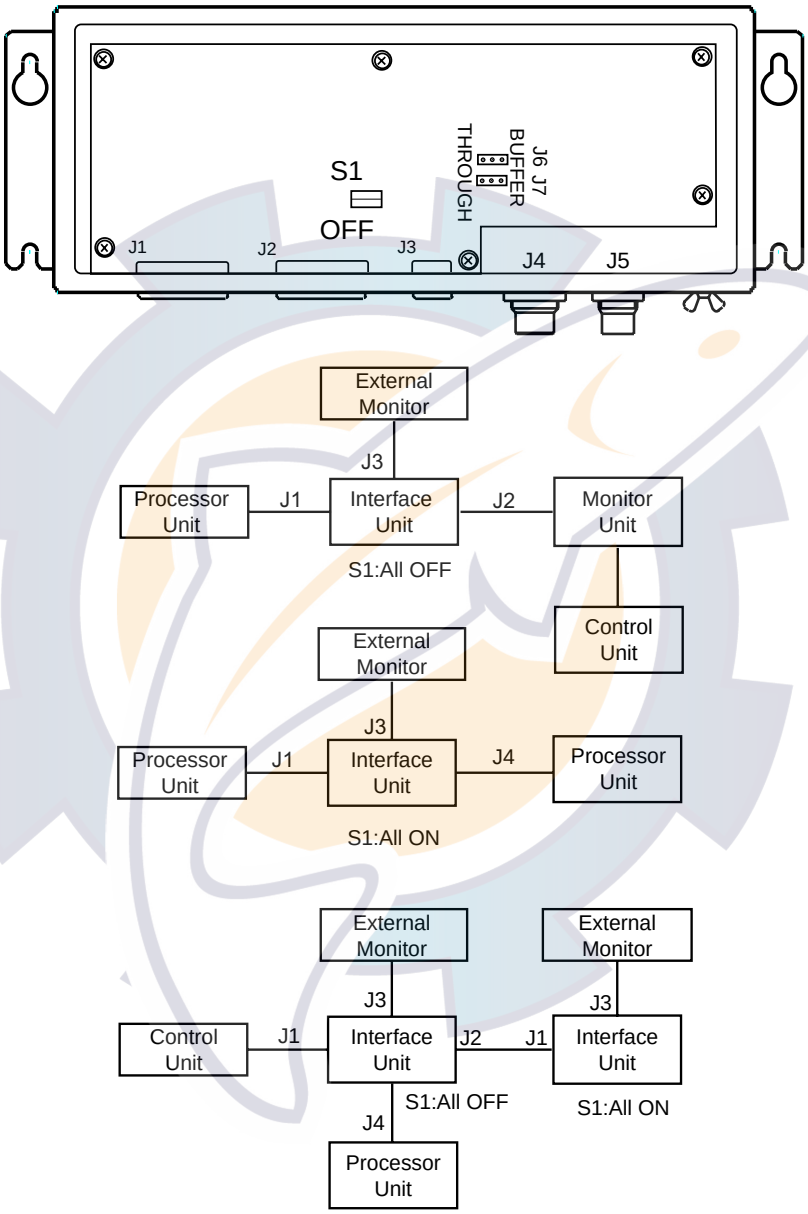

Figure 3-14 Interface unit, cover removed

EXIF board

Set the DIP switches on the EXIF Board 02P6279 (in the processor unit) according to equipment connected. No change is necessary when connecting a video sounder which uses a linear amplifier (FCV-271/382/782, etc.). For video sounder with log amplifier (FCV-1500, etc.) change the DIP switch settings as below. Early model FURUNO video sounders which have a log amplifier cannot be connected.

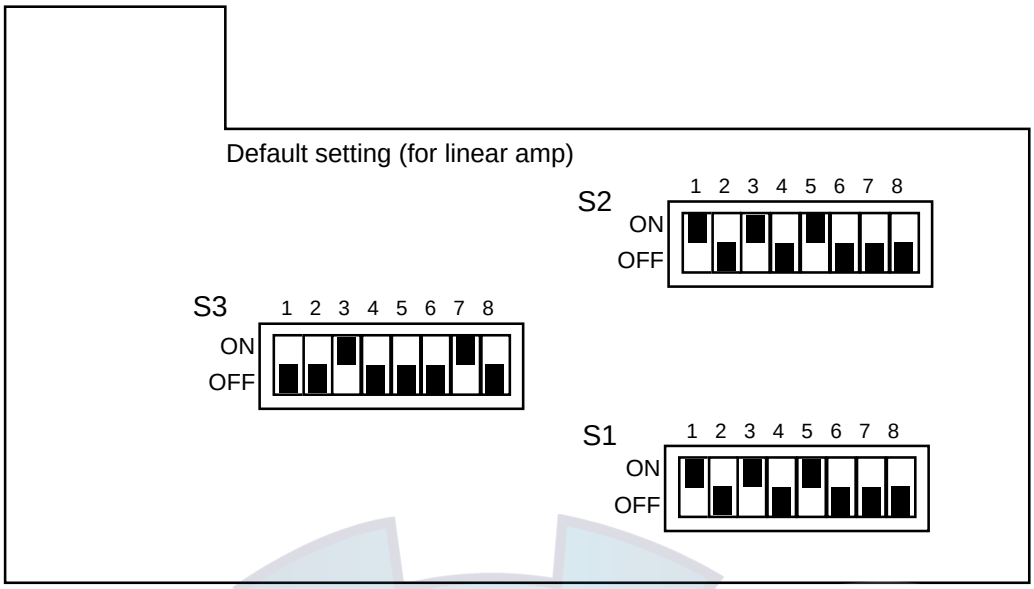

Setting for log amp

DIP SWITCH S1	DIP SWITCH S2	DIP SWITCH S3
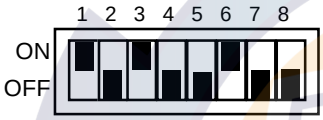	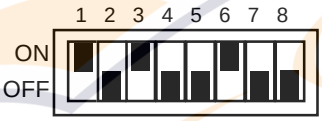	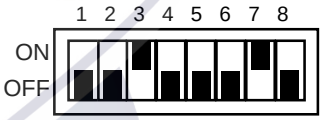
1: KP OUT L POS (Default: ON) 2: KP OUT L NEG (Default: OFF) 3: KP IN L POS (Default: ON) 4: KP IN L NEG (Default: OFF 5: LINER IN L (Default: ON) 6: LOG IN L (Default: OFF) 7: KP IN L 12V (OFF, Default) KP IN L 5 V (ON) 8: WL IN L 12V (OFF, Default) WL IN L 5 V (ON)	1: KP OUT H POS (Default: ON) 2: KP OUT H NEG (Default: OFF) 3: KP IN H POS (Default: ON) 4: KP IN H NEG (Default: OFF 5: LINER IN H (Default: ON) 6: LOG IN H (Default: OFF) 7: KP IN H 12V (OFF, Default) KP IN H 5 V (ON) 8: WL IN H 12V (OFF, Default) WL IN H 5 V (ON)	1: GND (Default: OFF) 2: KP OUT L (Default: OFF) 3: RECO H (Default: ON) 4: ETRREC H (Default: OFF) 5: GND (Default: OFF) 6: KP OUT H (Default: OFF) 7: RECO L (ON) 8: ETRREC L (Default: OFF)

LINEAR AMP (Default setting)
Low frequency
S1-5: ON, S1-6: OFF
High frequency
S2-5: ON, S2-6: OFF

LOG AMP
Low frequency
S1-5: OFF, S1-6: ON
High frequency
S2-5: OFF, S2-6: ON

ETR-2D, ETR-3D, ETR-5D/2, ETR-10D/2, EX-7
EXT-H (9 pin ... GND)
S3-1: ON, S3-2: OFF
EXT-L (9 pin ... GND)
S3-5: ON, S3:6, OFF

Note: Do not turn ON S3-1 and S3-2 or S3-5 and S3-6 at the same time. This will short a circuit board.

Figure 3-15 DIP switches on the EXIF board

APPENDIX 1
TRANSDUCER 50BL-12/50BL-24H

When using the transducer 50BL-12/50BL-24H, see this appendix.

Transducer, thru-hull pipe and tank list

Frequency (kHz)	Transducer	Hull Material	Tank (Code No.)	Fasten inside hull (Code No.)	Fasten outside hull (Code No.)
50/200	50BL-12/200B-8B	Steel	T-693 (000-015-044)	TWB-6000 (000-015-207)	TFB-7000 (000-015-209)
		FRP	T-693F (000-015-241)	TWB-1100 (000-015-218)	-
28/50	28F-24H/50BL-24H	Steel	T-696 (000-015-048)	TWB-6000 (000-015-207)	TFB-7000 (000-015-209)
		FRP	T-696F (000-015-244)	TRB-1100 (000-015-218)	-
50/88	50BL-24H/88F-126H	Steel	T-697 (000-015-239)	TWB-6000 (000-015-207)	TFB-7000 (000-015-209)
		FRP	T-697F (000-015-245)	TRB-1100 (000-015-218)	-
50/200	50BL-24H/200B-12H	Steel	T-695 (000-015-047)	TWB-6000 (000-015-207)	TFB-7000 (000-015-209)
		FRP	T-695F (000-015-243)	TRB-1100 (000-015-218)	-

Settings

Referring page 3-5, set XDCR SELECT to MANUAL.

Frequency	Output (kW)	Transducer	Supply voltage (V)
50	2	50BL-12	60
	3	50BL-24H	80

APPENDIX 2
NEW BLT TRANSDUCERS

A new type BLT transducer (Bolt-clamp Langevin Transducer) has been developed for this echo sounder. The BLT transducer has large bandwidth, good sound efficiency, compact structure and is reinforced for protection against slamming.

Transducer, thru-hull pipe and tank list

Frequency (kHz)	Transducer	Hull Material	Tank (Code No.)	Fasten inside hull (Code No.)	Fasten outside hull (Code No.)
28/200	28BL-6HR/200B-8B	Steel	T-693 (000-015-044)	TWB-6000 (2) (000-015-207)	TFB-7000 (2) (000-015-209)
		FRP	T-693F (000-015-241)	TRB-1100 (2) (000-015-219)	-
38/200	38BL-9HR/200B-8B	Steel	T-693 (000-015-044)	TWB-6000 (2) (000-015-207)	TFB-7000 (2) (000-015-209)
		FRP	T-693F (000-015-241)	TRB-1100 (2) (000-015-219)	-
50/200	50BL-12HR/200B-8B	Steel	T-693 (000-015-044)	TWB-6000 (2) (000-015-207)	TFB-7000 (2) (000-015-209)
		FRP	T-693F (000-015-241)	TRB-1100 (2) (000-015-219)	-
28/38	28BL-12HR/38BL-15HR	Steel	T-681 (000-015-849)	TWB-6000 (2) (000-015-207)	TFB-7000 (2) (000-015-209)
		FRP	T-681F (000-015-850)	TRB-1100 (2) (000-015-219)	-
28/50	28BL-12HR/50BL-24HR	Steel	T-681 (000-015-849)	TWB-6000 (2) (000-015-207)	TFB-7000 (2) (000-015-209)
		FRP	T-681F (000-015-850)	TRB-1100 (2) (000-015-219)	-
38/50	38BL-15HR/50BL-24HR	Steel	T-681 (000-015-849)	TWB-6000 (2) (000-015-207)	TFB-7000 (2) (000-015-209)
		FRP	T-681F (000-015-850)	TRB-1100 (2) (000-015-219)	-
28/88	28BL-12HR/88F-126H	Steel	T-682 (000-015-851)	TWB-6000 (2) (000-015-207)	TFB-7000 (2) (000-015-209)
		FRP	T-682F (000-015-852)	TRB-1100 (2) (000-015-219)	-
38/88	38BL-15HR/88F-126H	Steel	T-682 (000-015-851)	TWB-6000 (2) (000-015-207)	TFB-7000 (2) (000-015-209)
		FRP	T-682F (000-015-852)	TRB-1100 (2) (000-015-219)	-

50/88	50BL-24HR/88-126H	Steel	T-682 (000-015-851)	TWB-6000 (2) (000-015-207)	TFB-7000 (2) (000-015-209)
		FRP	T-682F (000-015-852)	TRB-1100 (2) (000-015-219)	-
28/200	28BL-12HR/200B-12H	Steel	T-683 (000-015-853)	TWB-6000 (2) (000-015-207)	TFB-7000 (2) (000-015-209)
		FRP	T-683F (000-015-854)	TRB-1100 (2) (000-015-219)	-
38/200	38BL-15HR/200B-12H	Steel	T-683 (000-015-853)	TWB-6000 (2) (000-015-207)	TFB-7000 (2) (000-015-209)
		FRP	T-683F (000-015-854)	TRB-1100 (2) (000-015-219)	-
50/200	50BL-24HR/200B-12H	Steel	T-683 (000-015-853)	TWB-6000 (2) (000-015-207)	TFB-7000 (2) (000-015-209)
		FRP	T-683F (000-015-854)	TRB-1100 (2) (000-015-219)	-
28/150	28BL-12HR/150B-12H	Steel	T-683 (000-015-853)	TWB-6000 (2) (000-015-207)	TFB-7000 (2) (000-015-209)
		FRP	T-683F (000-015-854)	TRB-1100 (2) (000-015-219)	-
38/150	38BL-15HR/150-12H	Steel	T-683 (000-015-853)	TWB-6000 (2) (000-015-207)	TFB-7000 (2) (000-015-209)
		FRP	T-683F (000-015-854)	TRB-1100 (2) (000-015-219)	-
38/150	50BL-24HR/156-12H	Steel	T-683 (000-015-853)	TWB-6000 (2) (000-015-207)	TFB-7000 (2) (000-015-209)
		FRP	T-683F (000-015-854)	TRB-1100 (2) (000-015-219)	-

Settings

- Referring page 3-5, set the menu as below.

  XDCR SELECT: MANUAL
  FREQ: 28/38/50 kHz
  SUPPLY VOLT 70/90 V

Transducer	Output	Supply voltage (V)
28BL-6HR	2	70
38BL-9HR		70
50BL-12HR		70
28BL-12HR	3	90
38BL-15HR		90
50BL-24HR		90

PACKING LIST FCV-1200L/LM (和／英一体型縦型)

NAME	OUTLINE	DESCRIPTION/CODE No.	Q'TY
ユニット UNIT			
操作／表示部 CONTROL/DISPLAY UNIT	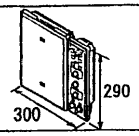	CV-1201/MU101C 000-012-487**	1
予備品 SPARE PARTS			SP06-01101
ﾋｭｰｽﾞ FUSE	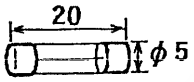	FGMB 3A 125V 000-104-909	3
付属品 ACCESSORIES			FP02-05022
ﾌｰﾄﾞ HOOD	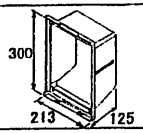	FP02-05022 001-412-230	1
付属品 ACCESSORIES			FP02-05101
ﾄﾘﾂｹﾀﾞｲ MOUNTING BASE	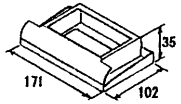	02-127-1301-0 100-285-140	1
ﾊﾝｶﾞｰ BRACKET	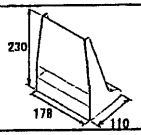	02-127-1302-0 100-285-150	1
+ｱﾌﾞｾｯﾄU1ｾﾑｽB +HEX.BOLT	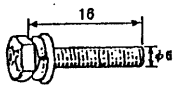	M6X16 SUS304 000-800-420	2

NAME	OUTLINE	DESCRIPTION/CODE No.	Q'TY
+ﾊﾞｲﾝﾄﾞｾﾑｽF WASHER BINDING HEAD SCREW	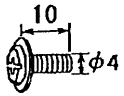	M4X10 C2700W 000-881-964	4
+ﾄﾗｽﾀｯﾋﾟﾝﾈｼﾞ +TAPPING SCREW	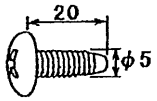	5X20 SUS304 1ｼｭ 000-802-081	4
工事材料 INSTALLATION MATERIALS			CP02-06600
ｹｰﾌﾞﾙ(ｸﾐﾋﾟﾝ) CABLE ASSY.	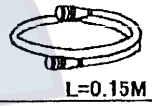	MJ-A10SPF0002-0015 (0.15M) 000-142-879	1

注記) ｺｰﾄﾞ末尾に[**]の付いたﾕﾆｯﾄは代表の型式/ｺｰﾄﾞを表示しています。
DOUBLE ASTERISK DENOTES COMMONLY USED EQUIPMENT.

DWG NO. C2365-Z01- A

(略図の寸法は、参考 です。 DIMENSIONS IN DRAWING FOR REFERENCE ONLY.)

PACKING LIST FCV-1200L/LM (和／英一体型横型)

NAME	OUTLINE	DESCRIPTION/CODE No.	Q'TY
ユニット UNIT			
操作／表示部 CONTROL/DISPLAY UNIT	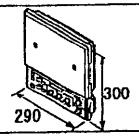	V-1202/MU101C 000-012-488**	1
予備品 SPARE PARTS			SP06-01101
ﾋｭｰｽﾞ FUSE	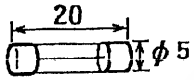	FGMB 3A 125V 000-104-909	3
付属品 ACCESSORIES			FP06-01102
ﾌｰﾄﾞｸﾐﾋﾝ HOOD ASSY.	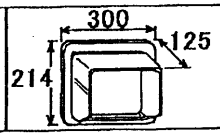	FP06-01102 006-556-240	1
付属品 ACCESSORIES			FP02-05101
ﾄﾘﾂｹﾀﾞｲ MOUNTING BASE	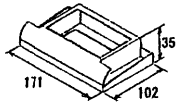	02-127-1301-0 100-285-140	1
ﾊﾝｶﾞｰ BRACKET	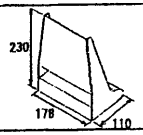	02-127-1302-0 100-285-150	1
+ｱﾌﾞｾｯﾄU1ｾﾑｽB +HEX.BOLT	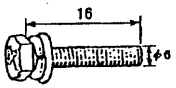	M6X16 SUS304 000-800-420	2

NAME	OUTLINE	DESCRIPTION/CODE No.	Q'TY
+ﾊﾞｲﾝﾄﾞｾﾑｽF WASHER BINDING HEAD SCREW	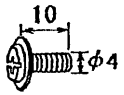	M4X10 C2700W 000-881-964	4
+ﾄﾗｽﾀｯﾋﾟﾝﾈｼﾞ +TAPPING SCREW	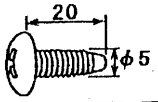	5X20 SUS304 1ｼｭ 000-802-081	4
工事材料 INSTALLATION MATERIALS			CP02-06600
ｹｰﾌﾞﾙ(ｸﾐﾋﾝ) CABLE ASSY.	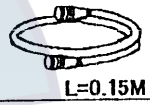	MJ-A10SPF0002-0015 (0.15M) 000-142-879	1

注記) ｺｰﾄﾞ末尾に[**]の付いたﾕﾆｯﾄは代表の型式/ｺｰﾄﾞを表示しています。
DOUBLE ASTERISK DENOTES COMMONLY USED EQUIPMENT.

DWG NO. C2365-Z02- A

(略図の寸法は、参考 です。 DIMENSIONS IN DRAWING FOR REFERENCE ONLY.)

PACKING LIST

02FJ-X-9853 -2 1/1

FCV-1200L/LM（和 ﾌﾞﾗｯｸﾎﾞｯｸｽ横型）

NAME	OUTLINE	DESCRIPTION/CODE №	Q'TY
ユニット UNIT			
操作部 CONTROL UNIT	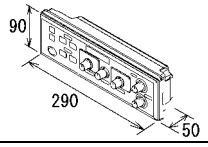	CV-1202 000-012-497 **	1
付属品 ACCESSORIES		**FP06-01120**	
操作取付台 CONTROL UNIT MOUNTING PLATE	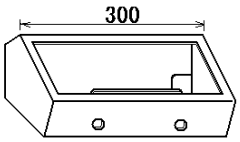	06-021-2111-0 100-279-740	1
ｿｳｻﾌﾞﾗｹｯﾄ BRACKET	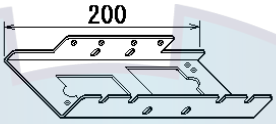	06-021-2112-0 100-281-880	1
+ﾄﾗｽﾀｯﾋﾟﾝﾈｼﾞ 1種 SELF-TAPPING SCREW	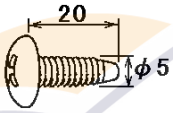	5X20 SUS304 000-802-081	2
ﾎｰﾙﾌﾟﾗｸﾞ HOLE PLUG		DP-687 ｸﾛ 000-808-417	2
六角ｾﾑｽB ｽﾘﾜﾘ HEX.BOLT (SLOTTED,WASHER HEAD)	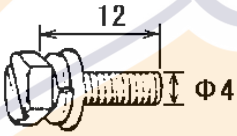	M4X12 SUS304 000-882-040	4
工事材料 INSTALLATION MATERIALS		**CP02-06610**	
ｹｰﾌﾞﾙ組品MJ CABLE ASSY.	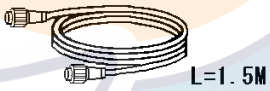	MJ-A10SPF0002-015 000-142-878	1 (*)
工事材料 INSTALLATION MATERIALS		**CP02-06620**	
ｹｰﾌﾞﾙ組品MJ CABLE ASSY.	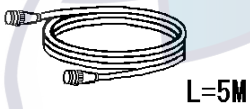	MJ-A10SPF0002-050 000-131-411	1 (*)

1.(*)印のｹｰﾌﾞﾙ組品は選択出来ます。
(*) MARKED CABLES ARE SELECTABLE.
2.ｺｰﾄﾞ末尾に[**]の付いたﾕﾆｯﾄは代表の型式/ｺｰﾄﾞを表示しています。
DOUBLE ASTERISK DENOTES COMMONLY USED EQUIPMENT.

（略図の寸法は、参考値です。 DIMENSIONS IN DRAWING FOR REFERENCE ONLY.）

PACKING LIST

FCV-1200L/LM（和 ﾌﾞﾗｯｸﾎﾞｯｸｽ縦型）

NAME	OUTLINE	DESCRIPTION/CODE №	Q'TY
ユニット UNIT			
操作部 CONTROL UNIT	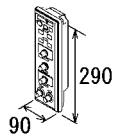	CV-1201 000-012-495 **	1
付属品 ACCESSORIES		**FP02-05111**	
操作取付金具 FLUSH MOUNTING PLATE FOR CONTROL UNIT	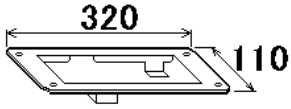	06-021-2101-1 100-279-731	1
+ﾄﾗｽﾀｯﾋﾟﾝﾈｼﾞ SELF-TAPPING SCREW	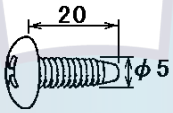	5X20 SUS304 1種 ｸﾛ 000-802-840	4
六角ｾﾑｽB ｽﾘﾜﾘ HEX.BOLT (SLOTTED,WASHER HEAD)	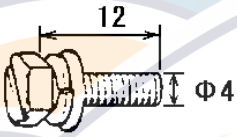	M4X12 SUS304 000-882-040	2
工事材料 INSTALLATION MATERIALS		**CP02-06610**	
ｹｰﾌﾞﾙ組品MJ CABLE ASSY.	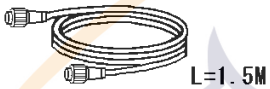	MJ-A10SPF0002-015 000-142-878	1 (*)
工事材料 INSTALLATION MATERIALS		**CP06-06620**	
ｹｰﾌﾞﾙ組品MJ CABLE ASSY.	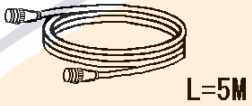	MJ-A10SPF0002-050 000-131-411	1 (*)

1.(*)印のｹｰﾌﾞﾙ組品は選択出来ます。
(*) MARKED CABLES ARE SELECTABLE.
2.ｺｰﾄﾞ末尾に[**]の付いたﾕﾆｯﾄは代表の型式/ｺｰﾄﾞを表示しています。
DOUBLE ASTERISK DENOTES COMMONLY USED EQUIPMENT.

（略図の寸法は、参考値です。 DIMENSIONS IN DRAWING FOR REFERENCE ONLY.）

FURUNO

CODE NO.	001-412-100	02FJ-X-9401 -1
TYPE	CP02-06501	1/1

工事材料表

INSTALLATION MATERIALS

FCV-1200L カラー魚群探知機

COLOR VIDEO SOUNDER

番号 NO.	名称 NAME	略図 OUTLINE	型名／規格 DESCRIPTIONS		数量 Q'TY	用途／備考 REMARKS
1	+トラスタッピンネジ +TAPPING SCREW	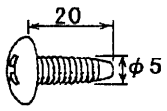	5X20 SUS304 1シュ		4	
			CODE NO.	000-802-081		
2	コネクタ CONNECTOR	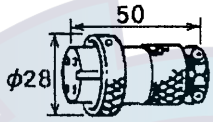	NCS-254-P		2	
			CODE NO.	000-506-505		
3	コネクタ CONNECTOR	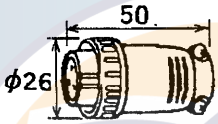	NJC-203-PF		1	
			CODE NO.	000-506-703		
4	アース板 COPPER STRAP	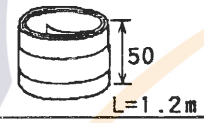	WEA-1004-0		1	
			CODE NO.	500-310-040		

DWG NO. C2365-M01- B

FURUNO ELECTRIC CO., LTD.

(略図の寸法は、参考値です。 DIMENSIONS IN DRAWING FOR REFERENCE ONLY.)

FURUNO

CODE NO.	001-412-110	02FJ-X-9402 -2
TYPE	CP02-06511	1/1

工事材料表

INSTALLATION MATERIALS

FCV-1200L/LM カラー魚群探知機

COLOR VIDEO SOUNDER

番号 NO.	名称 NAME	略図 OUTLINE	型名／規格 DESCRIPTIONS		数量 Q'TY	用途／備考 REMARKS
1	+トラスタッピンネジ +TAPPING SCREW	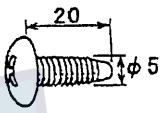	5X20 SUS304 1シュ		4	
			CODE NO.	000-802-081		
2	コネクタ CONNECTOR	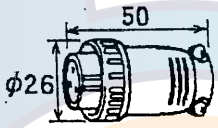	NJC-203-PF		1	
			CODE NO.	000-506-703		
3	コネクタ CONECTOR	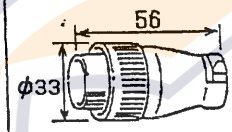	SRCNGA25-24P		2	
			CODE NO.	000-508-676		
4	アース板 COPPER STRAP	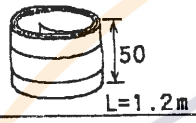	WEA-1004-0		1	
			CODE NO.	500-310-040		

DWG NO. C2365-M02- C

FURUNO ELECTRIC CO., LTD.

(略図の寸法は、参考値です。 DIMENSIONS IN DRAWING FOR REFERENCE ONLY.)

FURUNO

CODE NO.		02FJ-X-9404-0
TYPE		1/1

工事材料表

INSTALLATION MATERIALS

FCV-1200L/LM カラー魚群探知機

COLOR VIDEO SOUNDER

番号 NO.	名称 NAME	略図 OUTLINE	型名／規格 DESCRIPTIONS		数量 Q'TY	用途／備考 REMARKS
1	ケーブル(クミヒン) CABLE ASSY.	 L=1.5M	06S4078 *1.5M*		1	選択 TO BE SELECTED
			CODE NO.	000-142-901		
2	ケーブル(クミヒン) CABLE ASSY.	 L=10M	06S4078 *10M*		1	選択 TO BE SELECTED
			CODE NO.	000-142-900		
3	ケーブル(クミヒン) CABLE ASSY.	 L=5M	06S4078 *5M*		1	選択 TO BE SELECTED
			CODE NO.	000-142-902		

DWG NO.
C2365-M04- A

FURUNO ELECTRIC CO., LTD.

(略図の寸法は、参考値です。 DIMENSIONS IN DRAWING FOR REFERENCE ONLY.)

FURUNO

CODE NO.	006-556-240	06AS-X-9503 -3
TYPE	FP06-01102	1/1

付属品表

ACCESSORIES

番号 NO.	名称 NAME	略図 OUTLINE	型名／規格 DESCRIPTIONS		数量 Q'TY	用途／備考 REMARKS
1	ﾌｰﾄﾞｸﾐﾋﾝ HOOD ASSY.	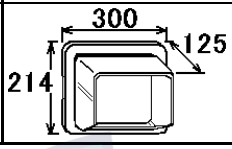	FP06-01102		1	
			CODE NO.	006-556-240		

06AS-X-9503

FURUNO ELECTRIC CO.,LTD.

（略図の寸法は、参考値です。 DIMENSIONS IN DRAWING FOR REFERENCE ONLY.）

FURUNO

CODE NO.	001-412-230	02FJ-X-9504 -1
TYPE	FP02-05022	1/1

付属品表

ACCESSORIES

FCV-1200L/LM　カラー魚群探知機

COLOR VIDEO SOUNDER

番号 NO.	名称 NAME	略図 OUTLINE	型名／規格 DESCRIPTIONS		数量 Q'TY	用途／備考 REMARKS
1	フード HOOD	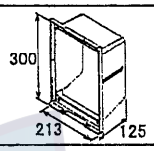	FP02-05022		1	
			CODE NO.	001-412-230		

DWG NO.
C2365-F04- B

FURUNO ELECTRIC CO., LTD.

(略図の寸法は、参考値です。 DIMENSIONS IN DRAWING FOR REFERENCE ONLY.)

FURUNO

CODE NO.	006-556-260	06AS-X-9501 -3
TYPE	FP06-01120	1/1

付属品表

ACCESSORIES

番号 NO.	名称 NAME	略図 OUTLINE	型名／規格 DESCRIPTIONS		数量 Q'TY	用途／備考 REMARKS
1	操作取付台 CONTROL UNIT MOUNTING PLATE	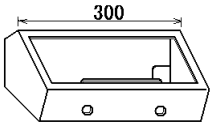	06-021-2111-0	CODE NO. 100-279-740	1	
2	ｿｳｻﾌﾞﾗｹｯﾄ BRACKET	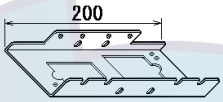	06-021-2112-0	CODE NO. 100-281-880	1	
3	+ﾄﾗｽﾀｯﾋﾟﾝﾈｼﾞ +TAPPING SCREW	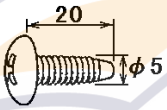	5X20 SUS304 1ｼｭ	CODE NO. 000-802-081	2	
4	ﾎｰﾙﾌﾟﾗｸﾞ HOLE PLUG	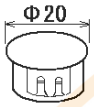	DP-687 ｸﾛ	CODE NO. 000-808-417	2	
5	六角ｾﾑｽB ｽﾘﾜﾘ HEX.BOLT (SLOTTED,WASHER HEAD)	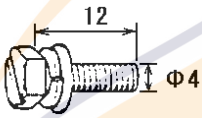	M4X12 SUS304	CODE NO. 000-882-040	4	

06AS-X-9501

FURUNO ELECTRIC CO.,LTD.

（略図の寸法は、参考値です。 DIMENSIONS IN DRAWING FOR REFERENCE ONLY.）

FURUNO

CODE NO.	006-556-220	06AS-X-9303 -3 1/1
TYPE	SP06-01111	BOX NO. P

SHIP NO.	SPARE PARTS LIST FOR	U S E	SETS PER VESSEL

ITEM NO.	NAME OF PART	OUTLINE	DWG. NO. OR TYPE NO.	QUANTITY WORKING PER SET	QUANTITY WORKING PER VES	QUANTITY SPARE	REMARKS/CODE NO.
1	ﾋｭｰｽﾞ FUSE	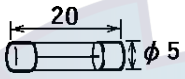	FGMB 0.2A 125V			3	000-121-723

MFR'S NAME	FURUNO ELECTRIC CO.,LTD.	DWG NO.	C1316-P03-C	1/1

(略図の寸法は、参考値です。 DIMENSIONS IN DRAWING FOR REFERENCE ONLY.)

FURUNO

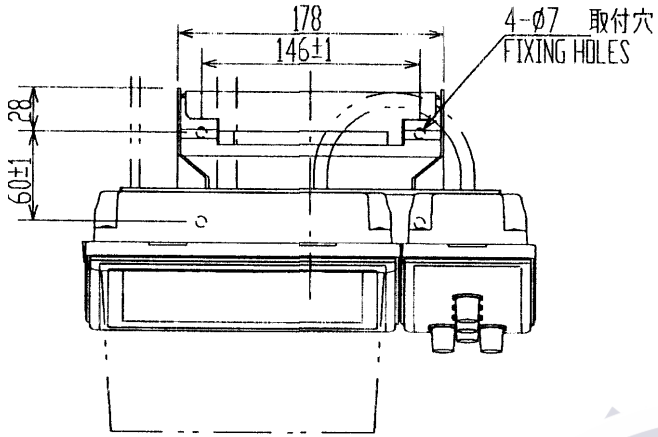

寸法区分（mm） DIMENSION	公差（mm） TOLERANCE
0 < L ≦ 50	±1.5
50 < L ≦ 100	±2.5
100 < L ≦ 500	±3

表 1
TABLE 1

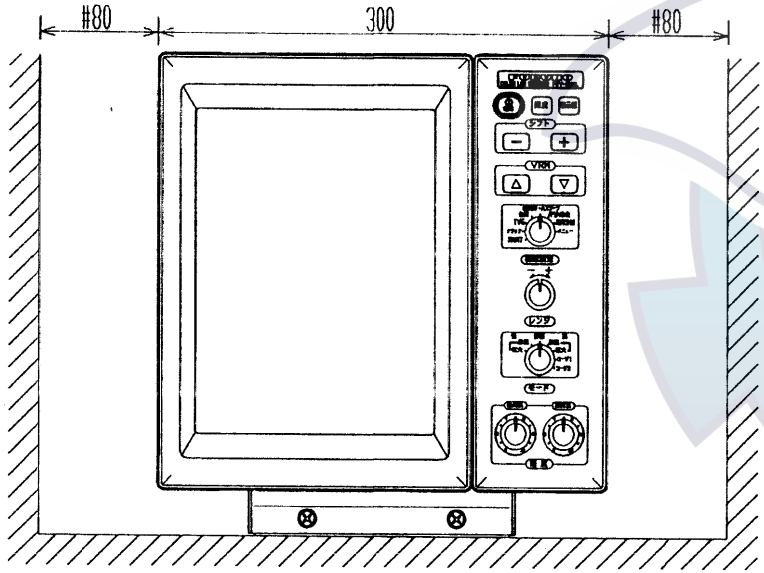

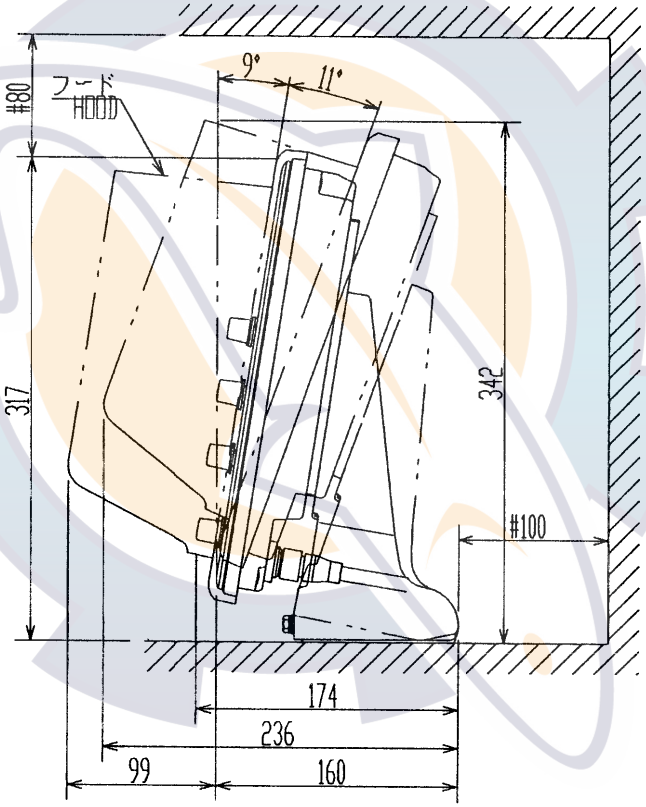

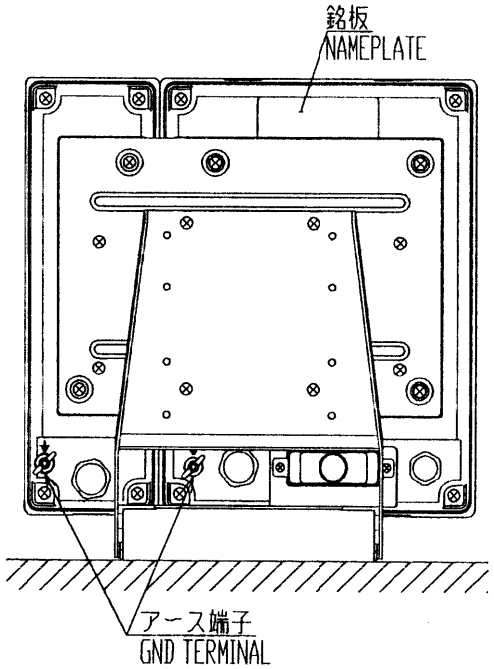

注 記
1）#印寸法は最小サービス空間寸法とする。
2）指定外の寸法公差は表1による。
3）取付用ネジは＋トラスタッピンネジ呼び径5x20を使用のこと。
4）装備ケーブルはサービス時、本体を前方に十分引出せるよう余裕を持たせること。

NOTE
1. #: RECOMMENDED SERVICE CLEARANCE.
2. TABLE 1 INDICATES TOLERANCE OF DIMENSIONS.
3. USE TAPPING SCREWS 5x20 FOR FIXING UNIT.
4. KEEP ENOUGH CABLE LENGTH BEHIND UNIT.

DRAWN Sep.17.'01 T.YAMASAKI		TITLE	MU-101C + CV-1201
CHECKED Sep18'01 Y.Kim		名称	表示部＋操作部
APPROVED Sep18'01 Y.Kim	FCV-1200L/LM		外寸図
SCALE 1/5 MASS 5.7 ±10% kg		NAME	MONITOR UNIT AND CONTROL UNIT
DWG.No. C2365-G01-D	02-127-180G-2		OUTLINE DRAWING

FURUNO ELECTRIC CO., LTD.

D-1

FURUNO

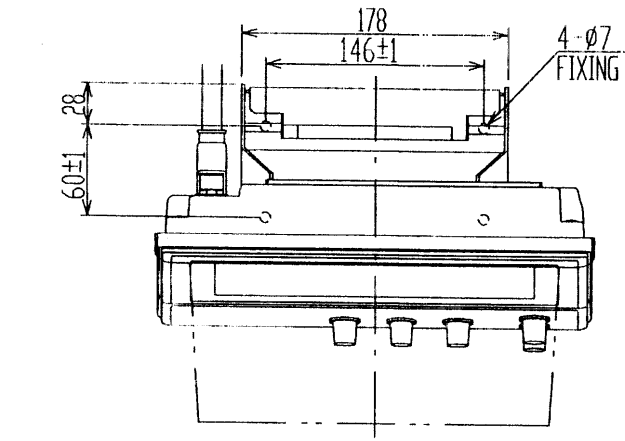

寸法区分（mm）DIMENSION	公差（mm）TOLERANCE
0 < L ≦ 50	±1.5
50 < L ≦ 100	±2.5
100 < L ≦ 500	±3

表 1
TABLE 1

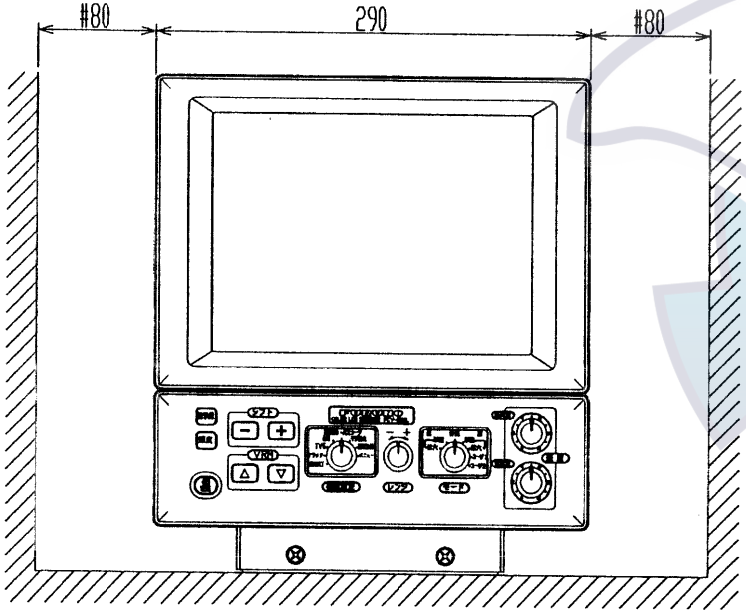

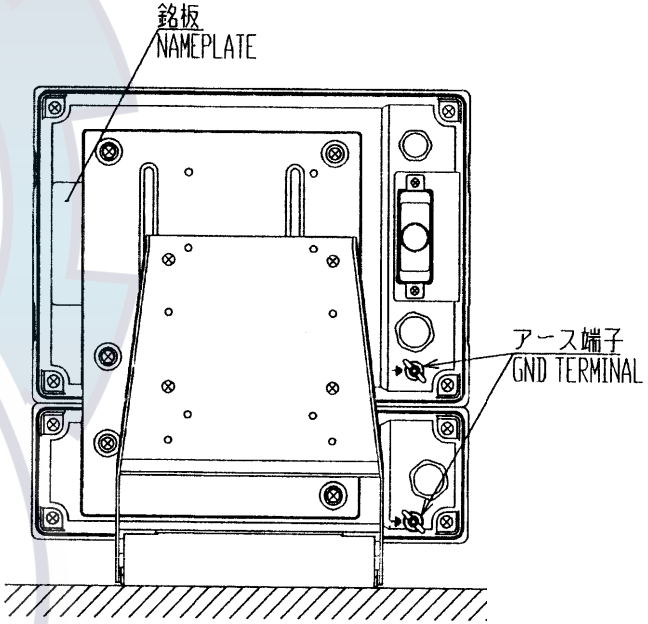

注 記
1）#印寸法は最小サービス空間寸法とする。
2）指定外の寸法公差は表1による。
3）取付用ネジは＋トラスタッピンネジ呼び径5x20を使用のこと。
4）装備ケーブルはサービス時、本体を前方に十分引出せるよう余裕を持たせること。

NOTE
1. #: RECOMMENDED SERVICE CLEARANCE.
2. TABLE 1 INDICATES TOLERANCE OF DIMENSIONS.
3. USE TAPPING SCREWS 5x20 FOR FIXING UNIT.
4. KEEP ENOUGH CABLE LENGTH BEHIND UNIT.

DRAWN Sep. 17 '01 T.YAMASAKI		TITLE	MU-101C + CV-1202
CHECKED Sep.18 '01 Y.K.		名称	表示部＋操作部
APPROVED Sep.18 '01 Y.K.	FCV-1200L/LM		外寸図
SCALE 1/5 MASS 5.7 ±10% kg		NAME	MONITOR UNIT AND CONTROL UNIT
DWG.No. C2365-G02-C	02-127-190G-2		OUTLINE DRAWING

FURUNO ELECTRIC CO., LTD.

FURUNO

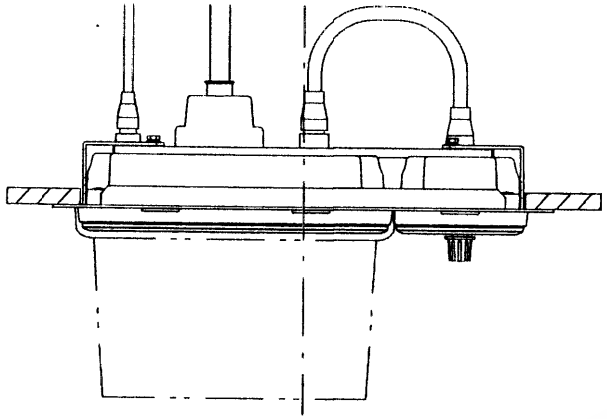

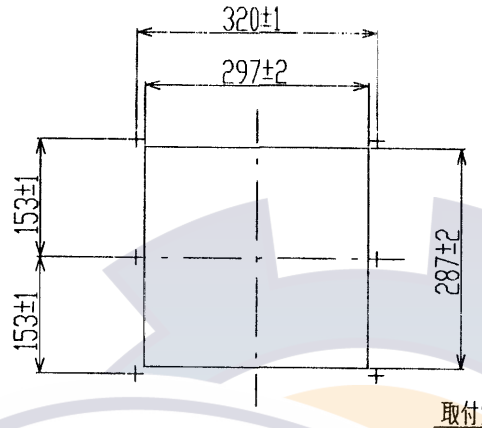

取付穴寸法図　尺度1/10
CUTOUT DIMENSIONS (SCALE 1/10)

寸法区分（mm）DIMENSION	公差（mm）TOLERANCE
0 < L ≦ 50	±1.5
50 < L ≦ 100	±2.5
100 < L ≦ 500	±3

表 1
TABLE 1

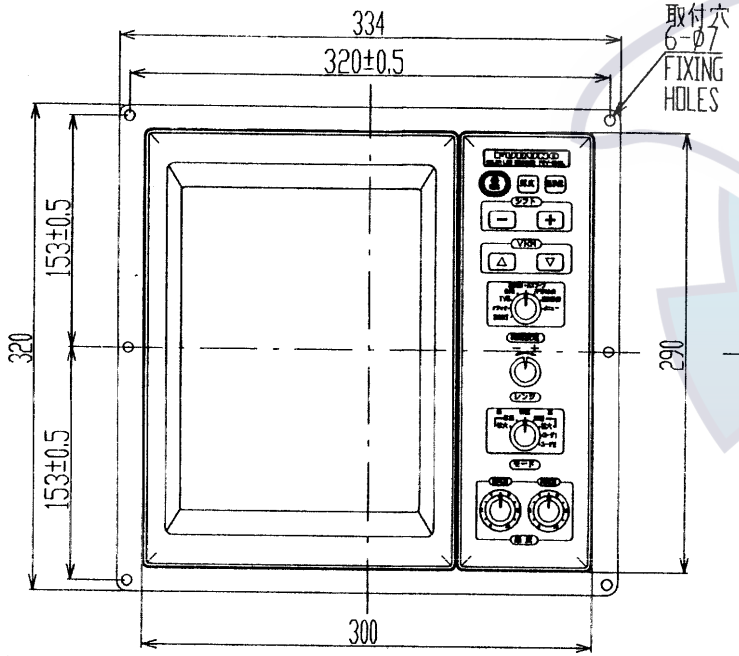

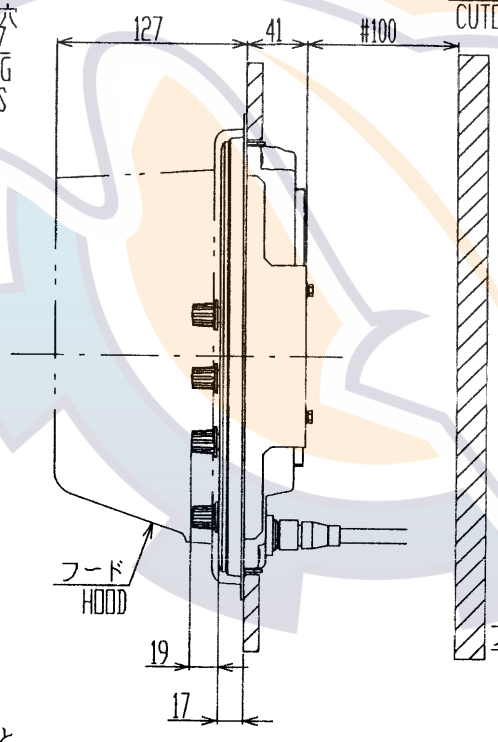

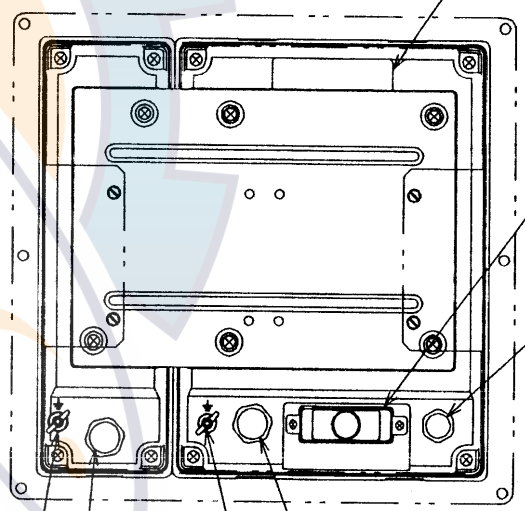

注 記
1）#印寸法は最小サービス空間寸法とする。
2）指定外の寸法公差は表1による。
3）取付用ネジは＋トラスタッピンネジ呼び径5x20を使用のこと。
4）装備ケーブルはサービス時、本体を前方に十分引出せるよう余裕を持たせること。

NOTE
1. # RECOMMENDED SERVICE CLEARANCE.
2. TABLE 1 INDICATES TOLERANCE OF DIMENSIONS.
3. USE TAPPING SCREWS 5x20 FOR FIXING UNIT.
4. KEEP ENOUGH CABLE LENGTH BEHIND UNIT.

DRAWN Sep.17 '01 I.YAMASAKI			TITLE MU-101C + CV-1201
CHECKED Sep.18 '01 Y.Kiui			名称 表示部＋操作部（埋込装備）
APPROVED Sep.18 '01 Y.Ki		FCV-1200L/1M	外寸図
SCALE 1/5	MASS 4.2 ±10% kg		NAME MONITOR UNIT AND CONTROL UNIT(FLASH MOUNT)
DWG.No. C2365-G08-B		02-127-1820-G0	OUTLINE DRAWING

FURUNO ELECTRIC CO., LTD.

D-2A

FURUNO

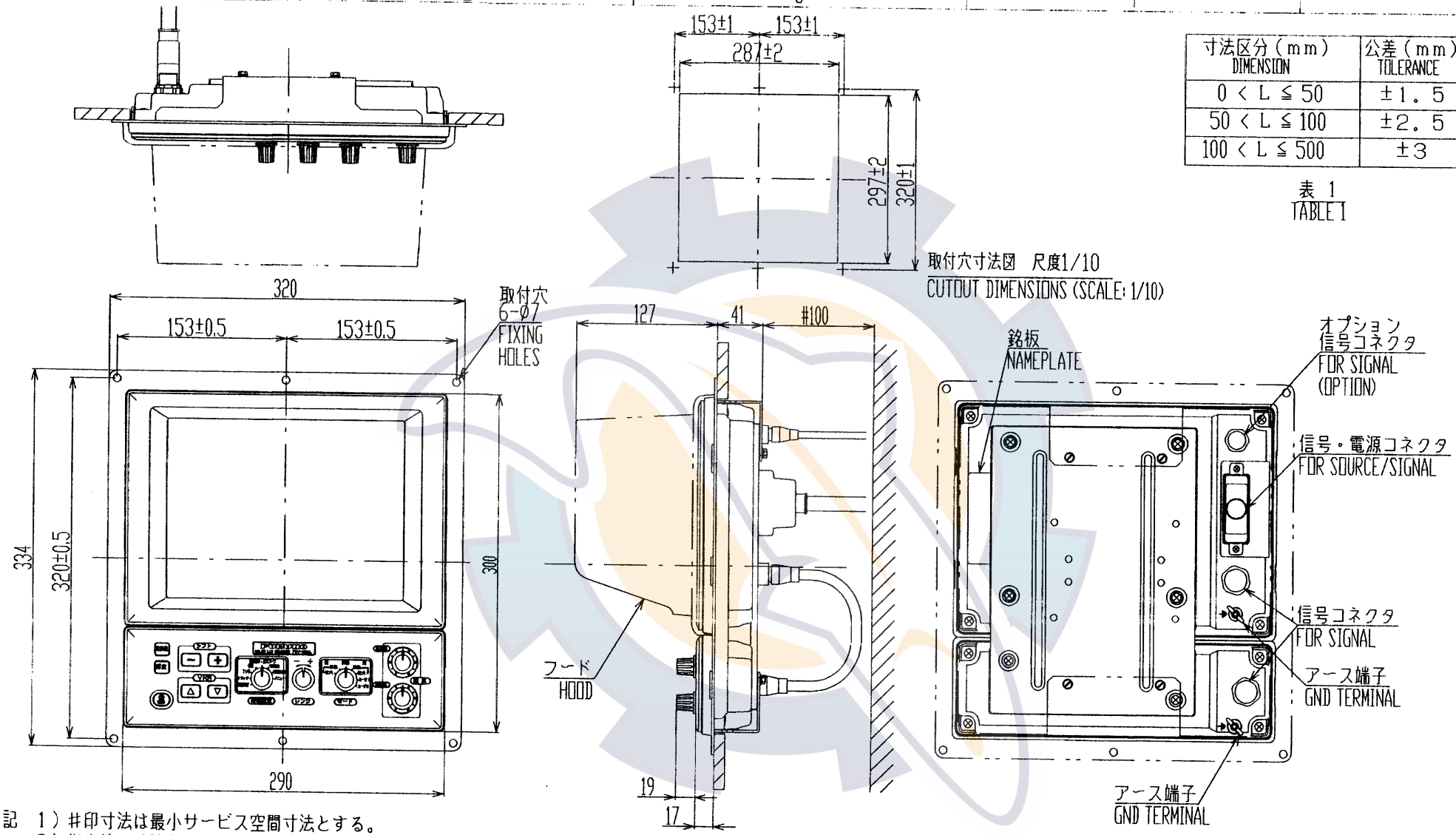

寸法区分（mm） DIMENSION	公差（mm） TOLERANCE
0 < L ≦ 50	±1.5
50 < L ≦ 100	±2.5
100 < L ≦ 500	±3

表 1
TABLE 1

注 記
1）#印寸法は最小サービス空間寸法とする。
2）指定外の寸法公差は表1による。
3）取付用ネジは＋トラスタッピンネジ呼び径5x20を使用のこと。
4）装備ケーブルはサービス時、本体を前方に十分引出せるよう余裕を持たせること。

NOTE
1. #: RECOMMENDED SERVICE CLEARANCE.
2. TABLE 1 INDICATES TOLERANCE OF DIMENSIONS.
3. USE TAPPING SCREWS 5x20 FOR FIXING UNIT.
4. KEEP ENOUGH CABLE LENGTH BEHIND UNIT.

DRAWN Sep.17 '01 I.YAMASAKI		TITLE	MU-101C + CV-1202
CHECKED		名称	表示部＋操作部
APPROVED			外寸図
SCALE 1/5 MASS 4.2 ±10% kg	FCV-1200L/LM	NAME	MONITOR UNIT AND CONTROL UNIT
DWG.No. C2365-G09-B	02-127-1920-G0		OUTLINE DRAWING

FURUNO ELECTRIC CO., LTD.

D-2B

FURUNO

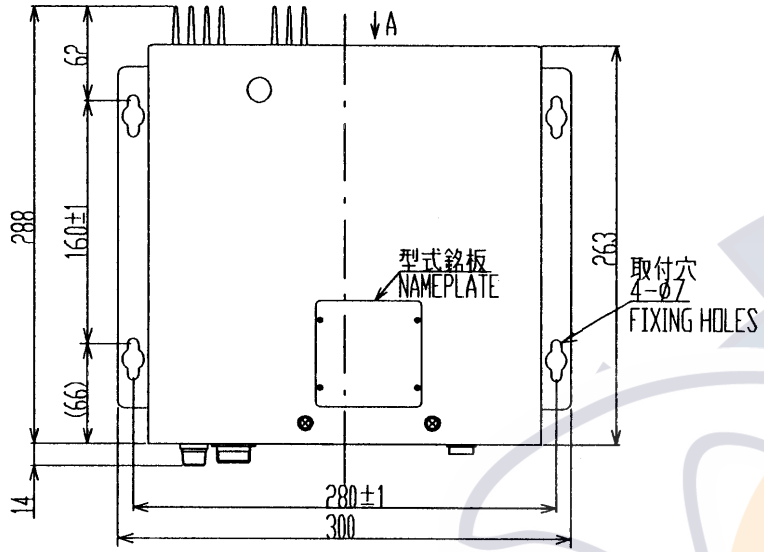

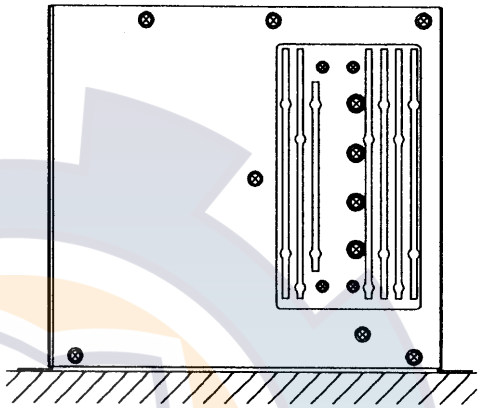

矢視A
VIEW A

寸法区分(mm) DIMENSION	公差(mm) TOLERANCE
0 < L ≦ 50	±1.5
50 < L ≦ 100	±2.5
100 < L ≦ 500	±3

表 1
TABLE 1

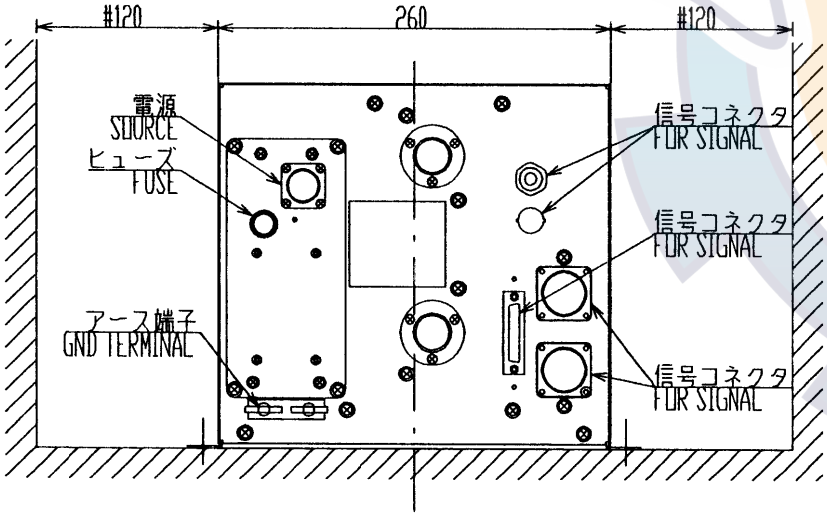

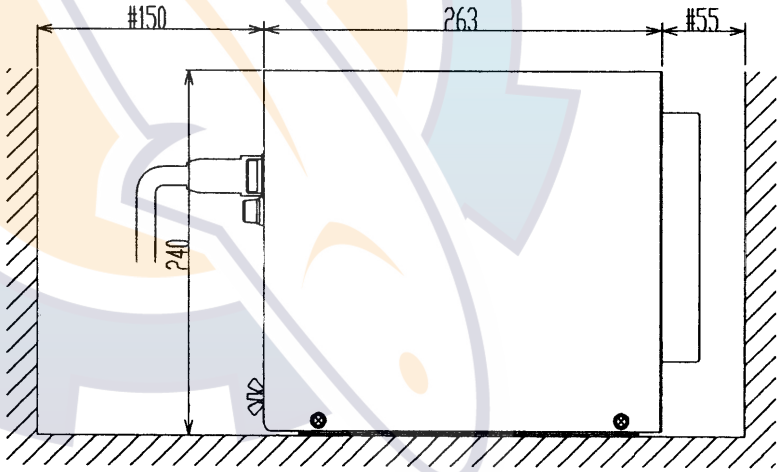

注 記
1) #印寸法は最小サービス空間寸法とする。
2) 指定外の寸法公差は表1による。
3) 取付用ネジは+トラスタッピンネジ呼び径5x20を使用のこと。

NOTE
1. #: RECOMMENDED SERVICE CLEARANCE.
2. TABLE 1 INDICATES TOLERANCE OF DIMENSIONS.
3. USE TAPPING SCREWS 5x20 FOR FIXING UNIT.

DRAWN Jul. 10 '01 T.YAMASAKI		TITLE	CV-1203/1503
CHECKED July 13 '01 T. K		名称	制御部
APPROVED July 13 '01 T. K	FCV-1500L FCV-1200L		外寸図
SCALE 1/5	MASS 7.9 ±10% kg	NAME	PROCESSOR UNIT
DWG.No. C2365-G03-B	02-127-2000-G2		OUTLINE DRAWING

FURUNO ELECTRIC CO., LTD.

FURUNO

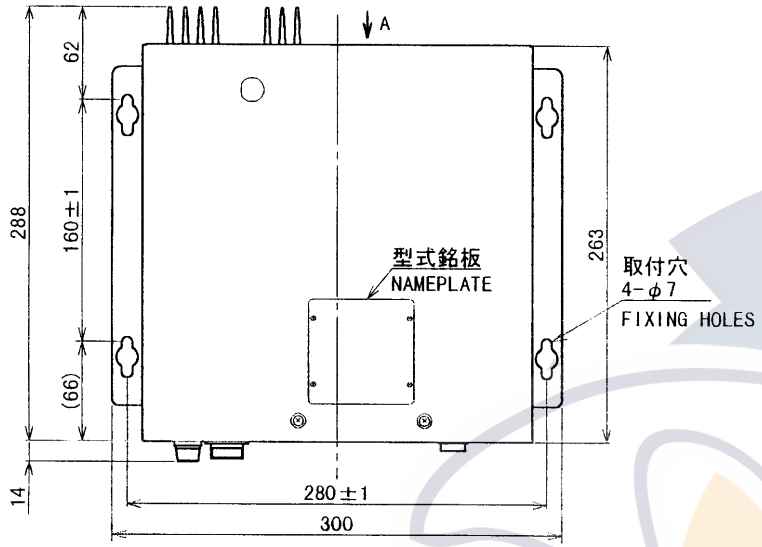

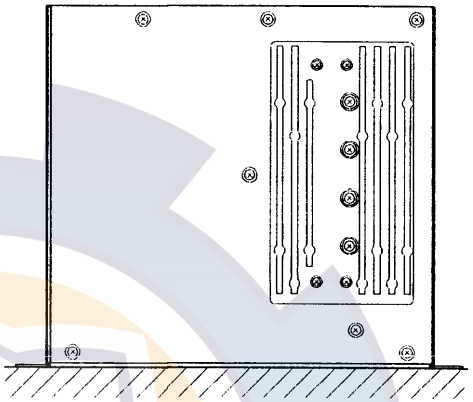

矢視A
VIEW A

寸法区分 (mm) DIMENSION	公差 (mm) TOLERANCE
0 < L ≦ 50	±1.5
50 < L ≦ 100	±2.5
100 < L ≦ 500	±3

表 1
TABLE 1

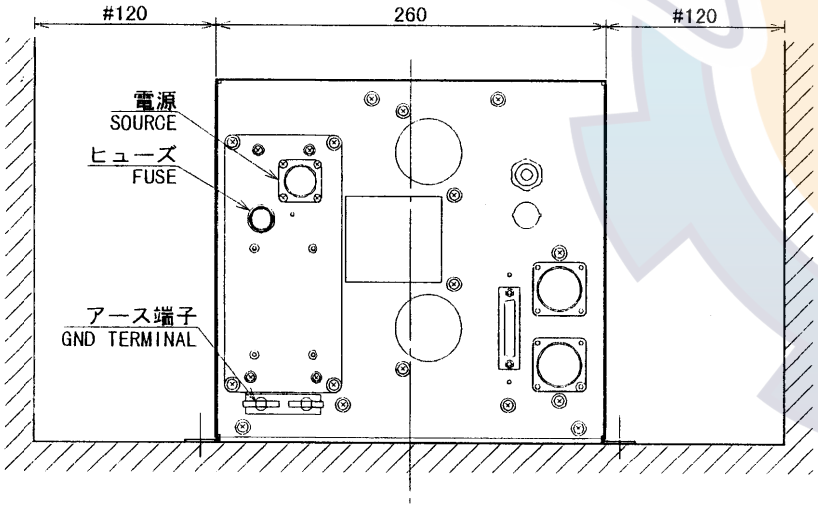

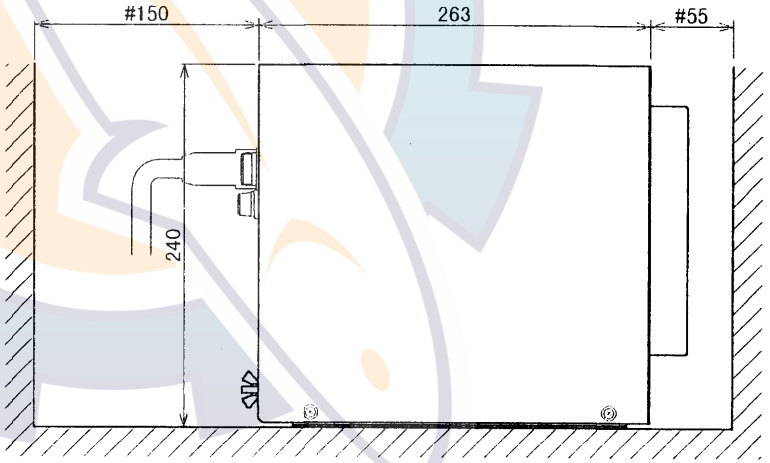

注 記 1）#印寸法は最小サービス空間寸法とする。
2）指定外の寸法公差は表1による。
3）取付用ネジは＋トラスタッピンネジ呼び径5x20を使用のこと。

NOTE 1. #: RECOMMENDED SERVICE CLEARANCE.
2. TABLE 1 INDICATES TOLERANCE OF DIMENSIONS.
3. USE TAPPING SCREWS 5x20 FOR FIXING UNIT.

DRAWN Mar 28 '00 T.YAMASAKI			TITLE CV-1203M
CHECKED Mar 28 '00 Y. Kuno			名称 制御部
APPROVED Mar 29 '00 S. Yoshiura	FCV-1200LM		外寸図
SCALE 1/5	MASS ±10% 6.0 kg		NAME PROCESSOR UNIT
DWG. No. C2365-G04- A		02-127-2100-G0	OUTLINE DRAWING

FURUNO ELECTRIC CO., LTD.

FURUNO

寸法区分（mm） DIMENSION	公差（mm） TOLERANCE
0 < L ≦ 50	±1.5
50 < L ≦ 100	±2.5
100 < L ≦ 500	±3

表 1
TABLE 1

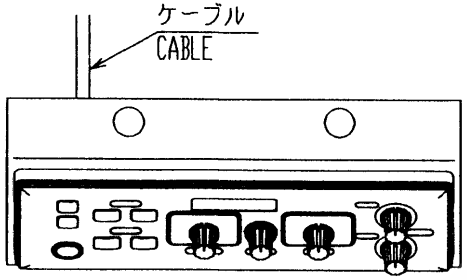

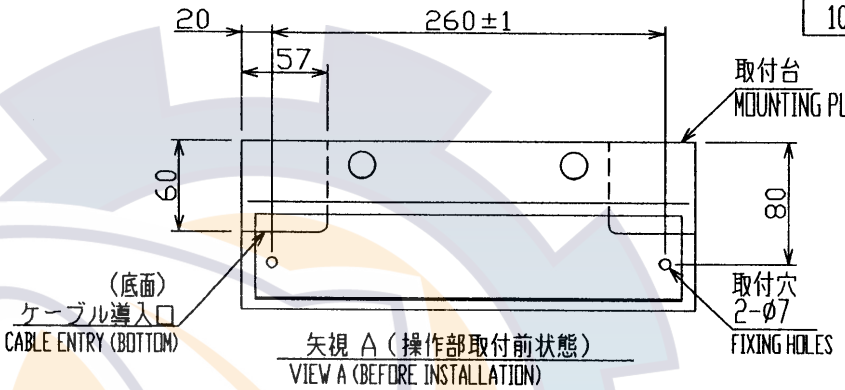

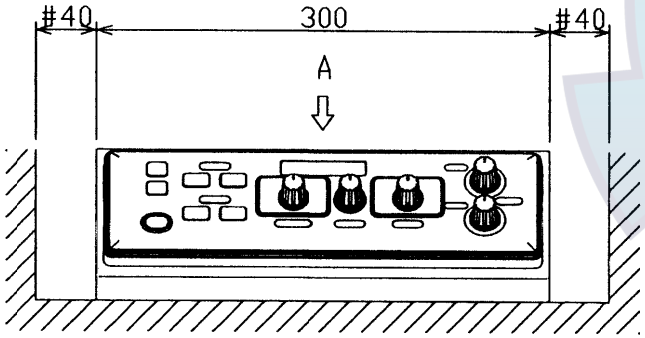

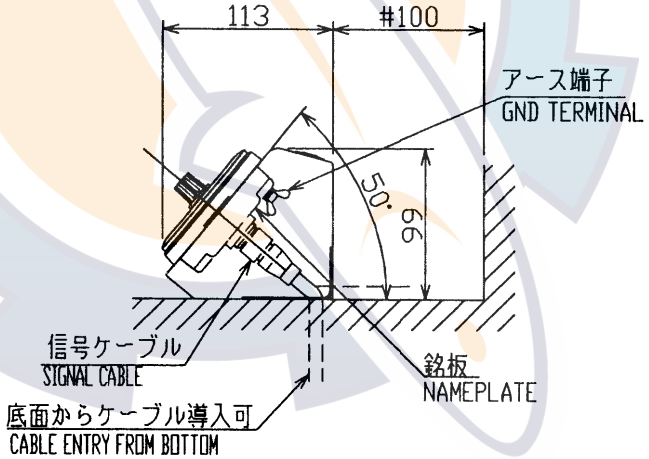

注 記
1）#印寸法は最小サービス空間寸法とする。
2）指定外の寸法公差は表1による。
3）取付用ネジは＋トラスタッピンネジ呼び径5x20を使用のこと。
4）装備ケーブルはサービス時、本体を前方に十分引出せるよう余裕を持たせること。

NOTE
1. # RECOMMENDED SERVICE CLEARANCE.
2. TABLE 1 INDICATES TOLERANCE OF DIMENSIONS.
3. USE TAPPING SCREWS 5x20 FOR FIXING UNIT.
4. KEEP ENOUGH CABLE LENGTH BEHIND UNIT.

DRAWN Dec. 26. '01 I.YAMASAKI		TITLE	CV-1202/1501
CHECKED Dec 26 '01 Y.Kim		名称	操作部（卓上装備）
APPROVED Dec 26 '01 Y.Kim			外寸図
SCALE 1/5 MASS 1.6 ±10% kg	FCV-1500L FCV-1200L/LM	NAME	CONTROL UNIT (TABLETOP MOUNT)
DWG.No. C2365-G05-C	02-127-1940-G1		OUTLINE DRAWING

FURUNO ELECTRIC CO., LTD.

FURUNO

寸法区分 (mm) DIMENSION	公差 (mm) TOLERANCE
0 ＜ L ≦ 50	±1．5
50 ＜ L ≦ 100	±2．5
100 ＜ L ≦ 500	±3

表 1
TABLE 1

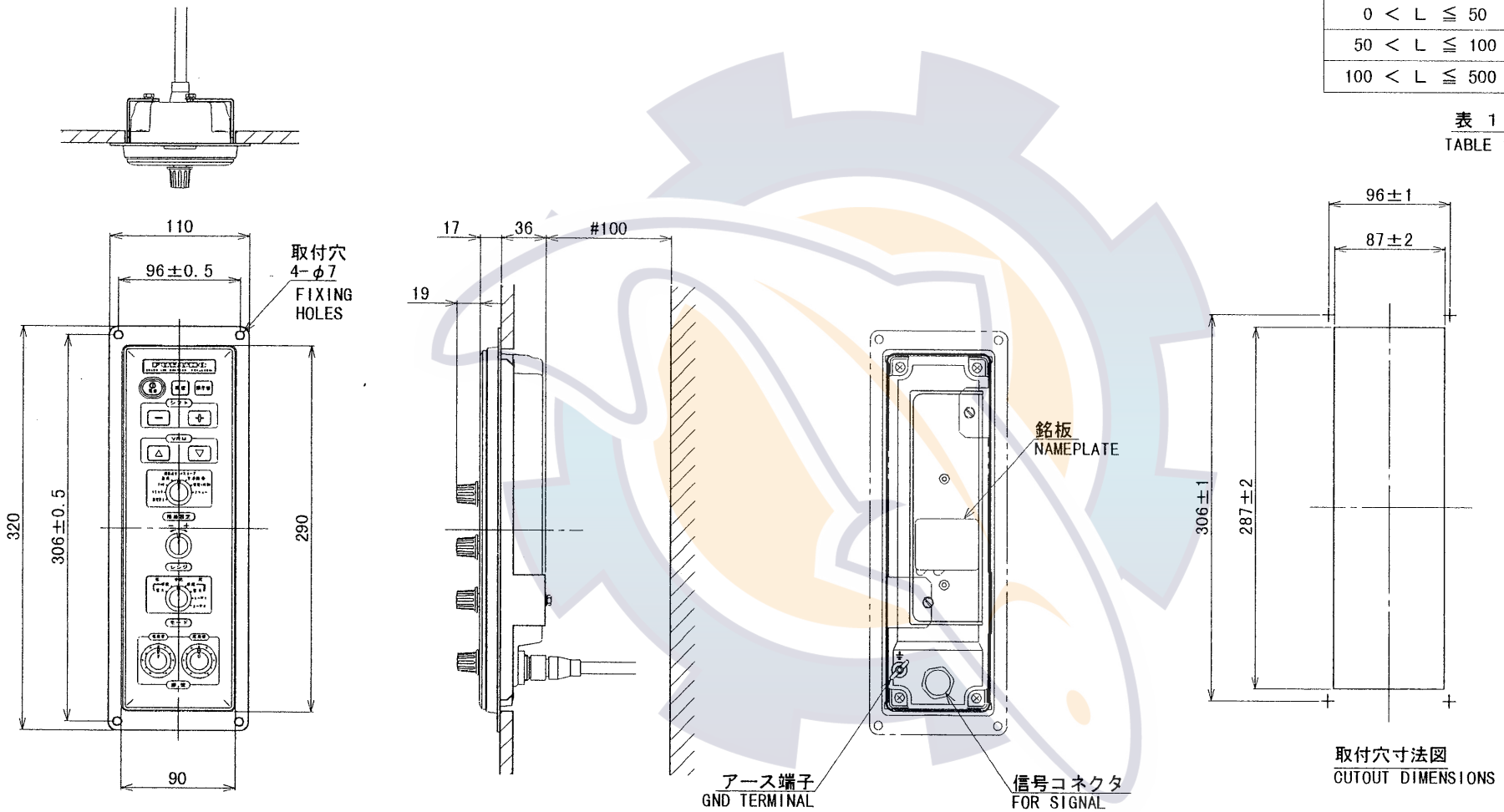

注 記　1）#印寸法は最小サービス空間寸法とする。
　　2）指定外の寸法公差は表１による。
　　3）取付用ネジは＋トラスタッピンネジ呼び径5x20を使用のこと。
　　4）装備ケーブルはサービス時、本体を前方に十分引出せるよう余裕を持たせること。

NOTE　1. #: RECOMMENDED SERVICE CLEARANCE.
　　2. TABLE 1 INDICATES TOLERANCE OF DIMENSIONS.
　　3. USE TAPPING SCREWS 5x20 FOR FIXING UNIT.
　　4. KEEP ENOUGH CABLE LENGTH BEHIND UNIT.

DRAWN July 5 '00 T. YAMASAKI			TITLE CV-1201
CHECKED July 5 '00 Y. Kuno			名称 操作部（埋込装備）
APPROVED July 5 '00 T. Kuno		FCV-1200L/LM	外寸図
SCALE 1/5	MASS ±10% 1.1 kg		NAME CONTROL UNIT (FLASH MOUNT)
DWG. No. C2365-G10- A		02-127-1840-G0	OUTLINE DRAWING

FURUNO ELECTRIC CO., LTD.

D - 5A

FURUNO

寸法区分（mm） DIMENSION	公差（mm） TOLERANCE
0 < L ≦ 50	±1.5
50 < L ≦ 100	±2.5
100 < L ≦ 500	±3

表 1 TABLE 1

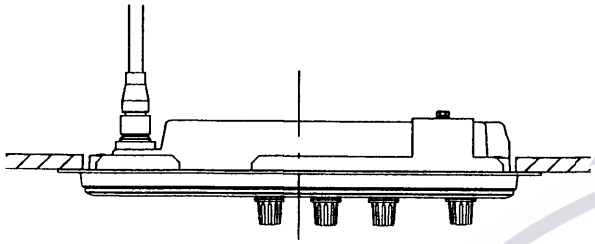

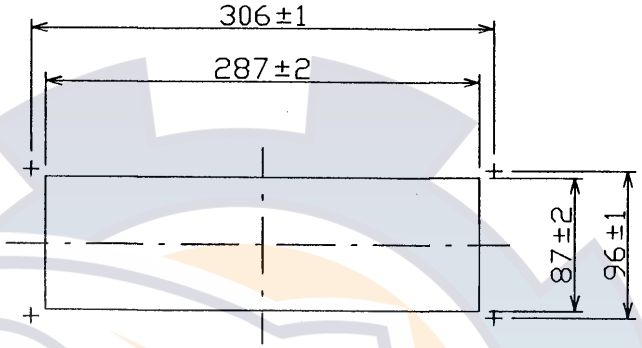

取付穴寸法図
CUTOUT DIMENSIONS

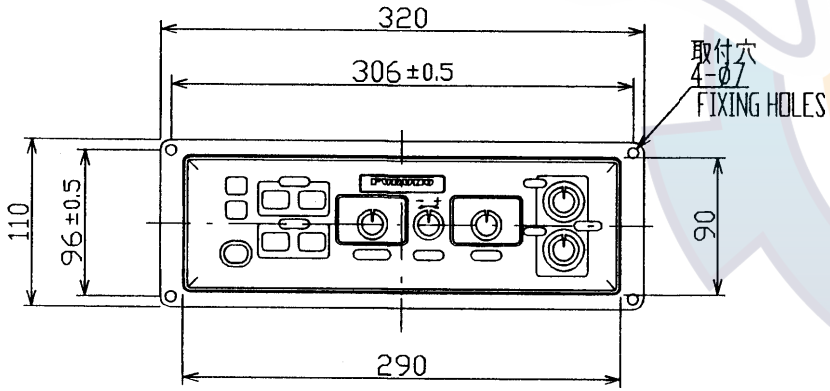

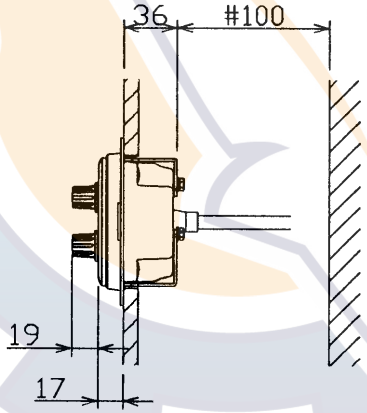

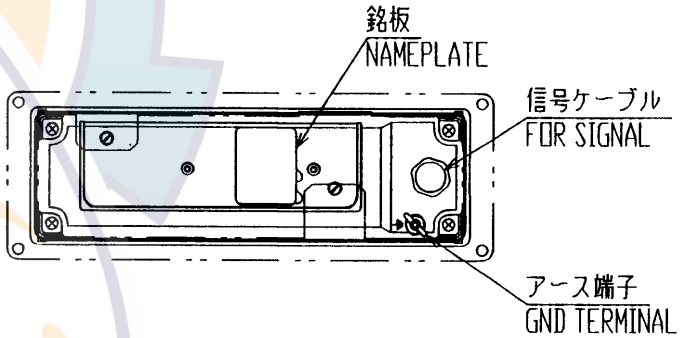

注 記
1）#印寸法は最小サービス空間寸法とする。
2）指定外の寸法公差は表1による。
3）取付用ネジは+トラスタッピンネジ呼び径5x20を使用のこと。
4）装備ケーブルはサービス時、本体を前方に十分引出せるよう余裕を持たせること。

NOTE
1. #: RECOMMENDED SERVICE CLEARANCE.
2. TABLE 1 INDICATES TOLERANCE OF DIMENSIONS.
3. USE TAPPING SCREWS 5x20 FOR FIXING THE UNIT.
4. KEEP ENOUGH CABLE LENGTH BEHIND UNIT.

DRAWN Jan.19 '01 T.YAMASAKI		TITLE	CV-1202/1501
CHECKED Jan 19 '01 Y.Kim		名称	操作部（埋込装備）
APPROVED Jan 19 '01 Y.Kim	FCV-1500L FCV-1200L/LM		外寸図
SCALE 1/5 MASS 1.1 ±10% kg		NAME	CONTROL UNIT (FLASH MOUNT)
DWG.No. C2365-G11- B	02-127-1950-G0		OUTLINE DRAWING

FURUNO ELECTRIC CO., LTD.

D - 5B

FURUNO

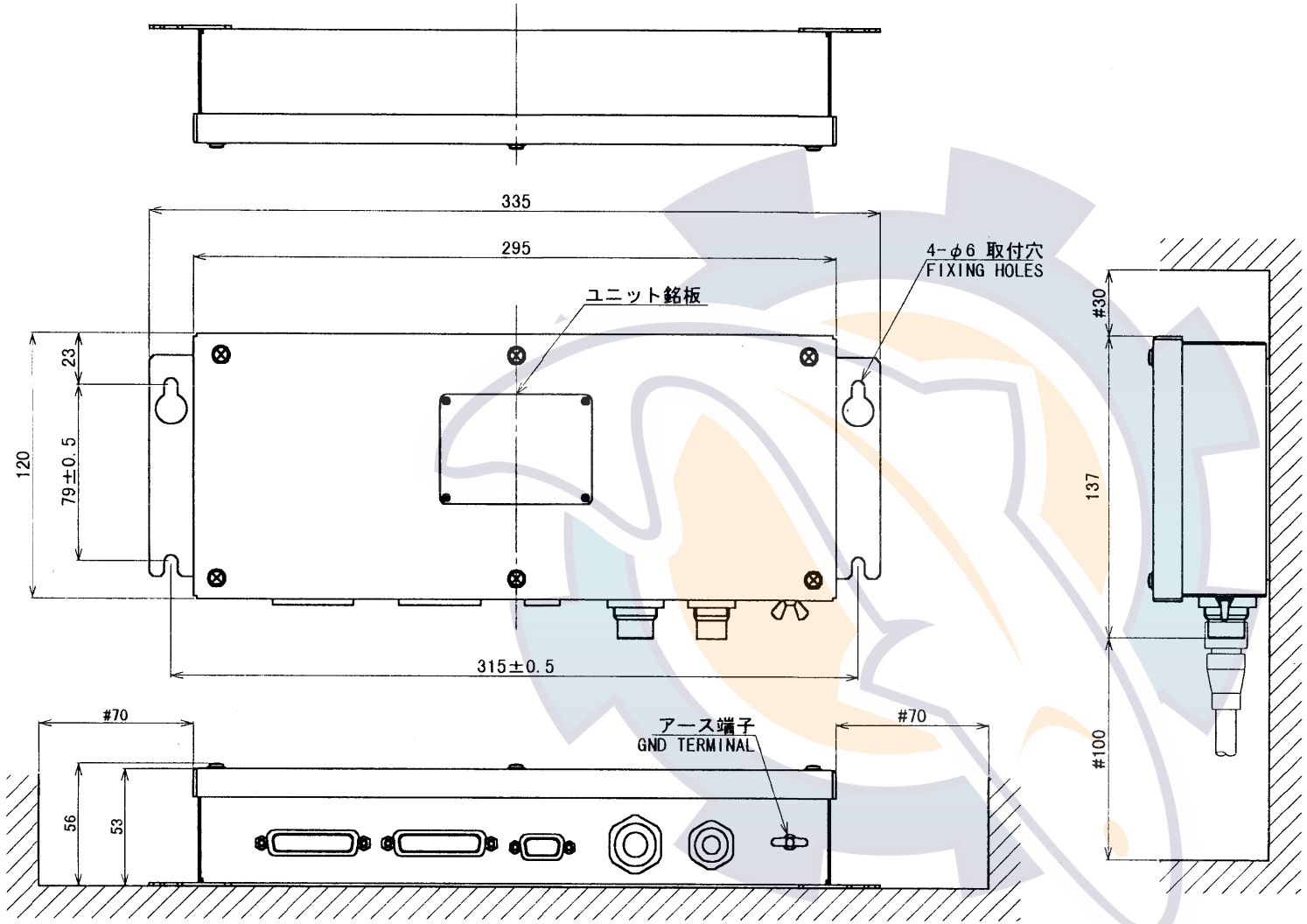

寸法区分 (mm) DIMENSION	公差 (mm) TOLERANCE
0 < L ≦ 50	±1.5
50 < L ≦ 100	±2.5
100 < L ≦ 500	±3

表 1
TABLE 1

注 記 1) #印寸法は最小サービス空間寸法とする。
2) 指定外の寸法公差は表1による。

NOTE 1. #: RECOMMENDED SERVICE CLEARANCE.
2. TABLE 1 INDICATES TOLERANCE OF DIMENSIONS.

DRAWN Mar 29 '00 T.YAMASAKI		TITLE	IF-8000
CHECKED Mar 30 '00 Y.Kuri		名称	インターフェイスユニット
APPROVED Mar 30 '00 Y.Kuri	FCV-1200L/1200LM CH-250/250S		外寸図
SCALE 1/3	MASS ±10% 1.1 kg	NAME	INTERFACE UNIT
DWG. No. C1316-G07- B	06-021-5000-G1		OUTLINE DRAWING

FURUNO ELECTRIC CO., LTD.

FURUNO

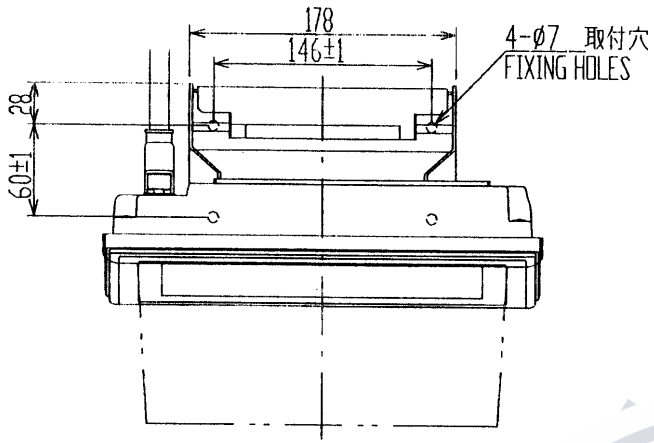

寸法区分（mm） DIMENSION	公差（mm） TOLERANCE
0 < L ≦ 50	±1.5
50 < L ≦ 100	±2.5
100 < L ≦ 500	±3

表 1
TABLE 1

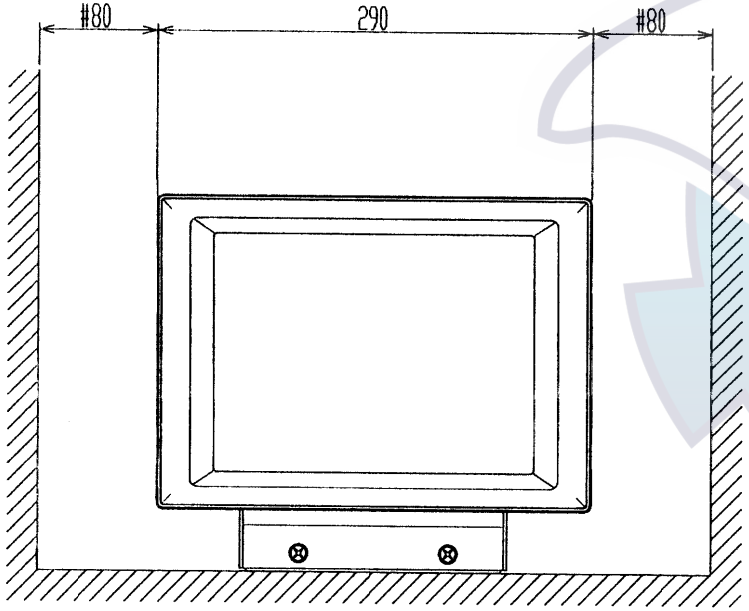

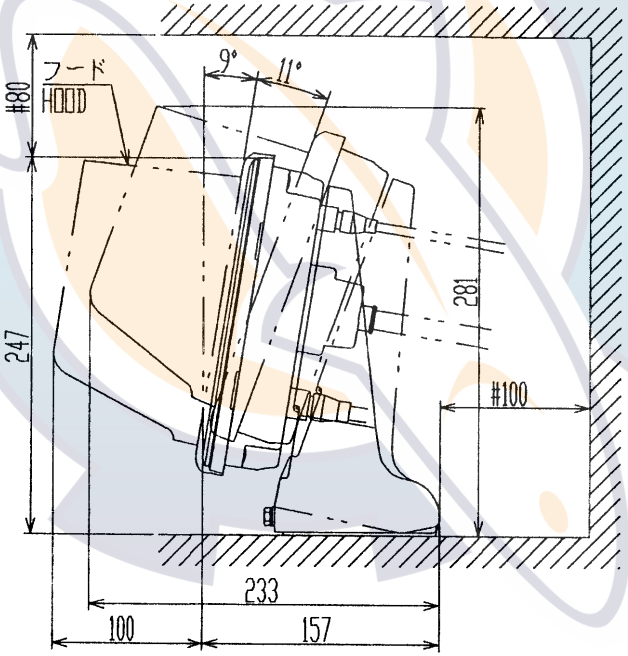

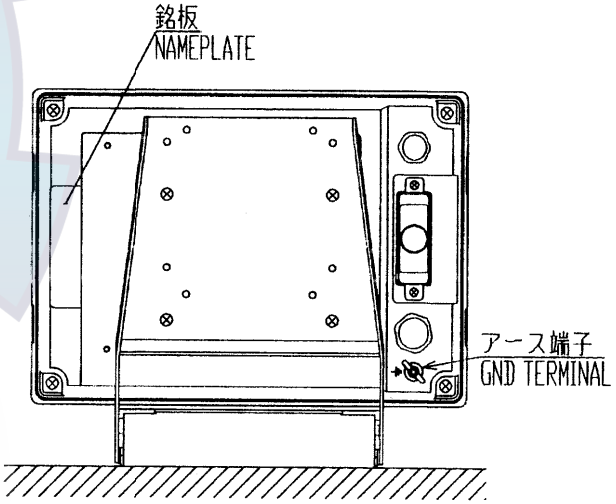

注 記
1）#印寸法は最小サービス空間寸法とする。
2）指定外の寸法公差は表1による。
3）取付用ネジは＋トラスタッピンネジ呼び径5x20を使用のこと。
4）装備ケーブルはサービス時、本体を前方に十分引出せるよう余裕を持たせること。

NOTE
1. #: RECOMMENDED SERVICE CLEARANCE.
2. TABLE 1 INDICATES TOLERANCE OF DIMENSIONS.
3. USE TAPPING SCREWS 5x20 FOR FIXING UNIT.
4. KEEP ENOUGH CABLE LENGTH BEHIND UNIT.

DRAWN Sep.17'01 J.YAMASAKI		TITLE	MU-101C
CHECKED Sep18'01		名称	表示部
APPROVED Sep18'01	FCV-1200L/LM		外寸図
SCALE 1/5 MASS 4.2 ±10% kg		NAME	MONITOR UNIT
DWG.No. C2365-G06-B	02-127-191G-2		OUTLINE DRAWING

FURUNO ELECTRIC CO., LTD.

FURUNO

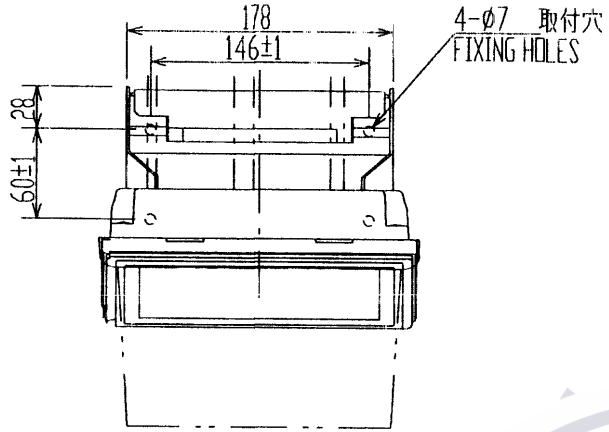

寸法区分（mm）DIMENSION	公差（mm）TOLERANCE
0 < L ≦ 50	±1.5
50 < L ≦ 100	±2.5
100 < L ≦ 500	±3

表 1
TABLE 1

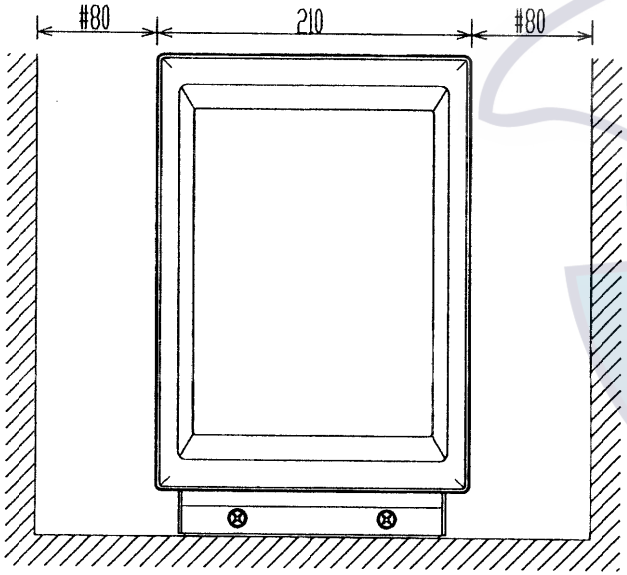

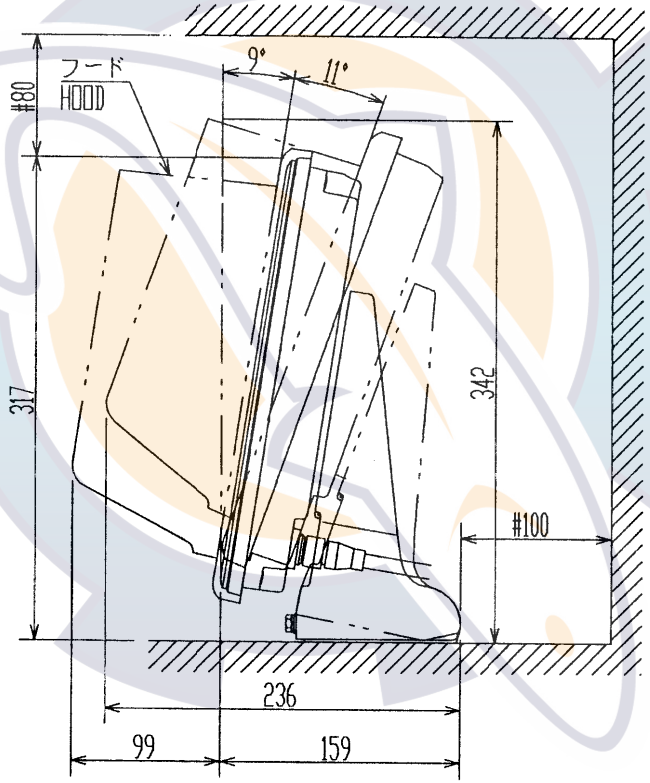

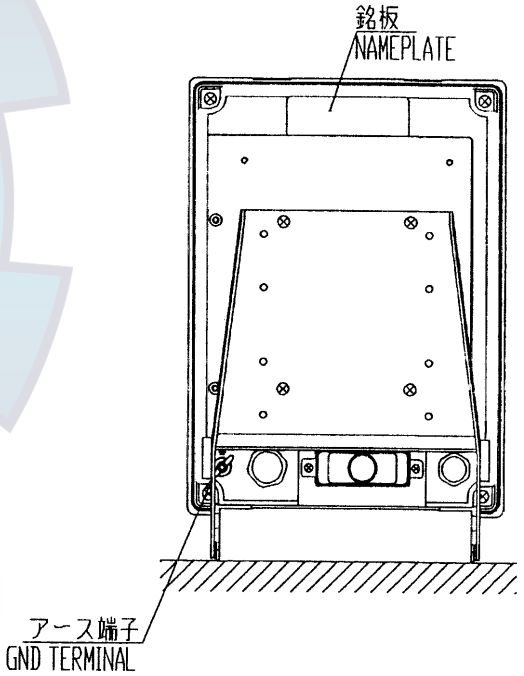

注 記
1）#印寸法は最小サービス空間寸法とする。
2）指定外の寸法公差は表1による。
3）取付用ネジは＋トラスタッピンネジ呼び径5x20を使用のこと。
4）装備ケーブルはサービス時、本体を前方に十分引出せるよう余裕を持たせること。

NOTE
1. #: RECOMMENDED SERVICE CLEARANCE.
2. TABLE 1 INDICATES TOLERANCE OF DIMENSIONS.
3. USE TAPPING SCREWS 5x20 FOR FIXING UNIT.
4. KEEP ENOUGH CABLE LENGTH BEHIND UNIT.

DRAWN Sep.17 '01 I.YAMASAKI		TITLE	MU-101C
CHECKED		名称	表示部
APPROVED	FCV-1200L/LM		外寸図
SCALE 1/5 MASS 4.2 ±10% kg		NAME	MONITOR UNIT
DWG.No. C2365-G07-B	02-127-181G-1		OUTLINE DRAWING

FURUNO ELECTRIC CO., LTD.

FURUNO

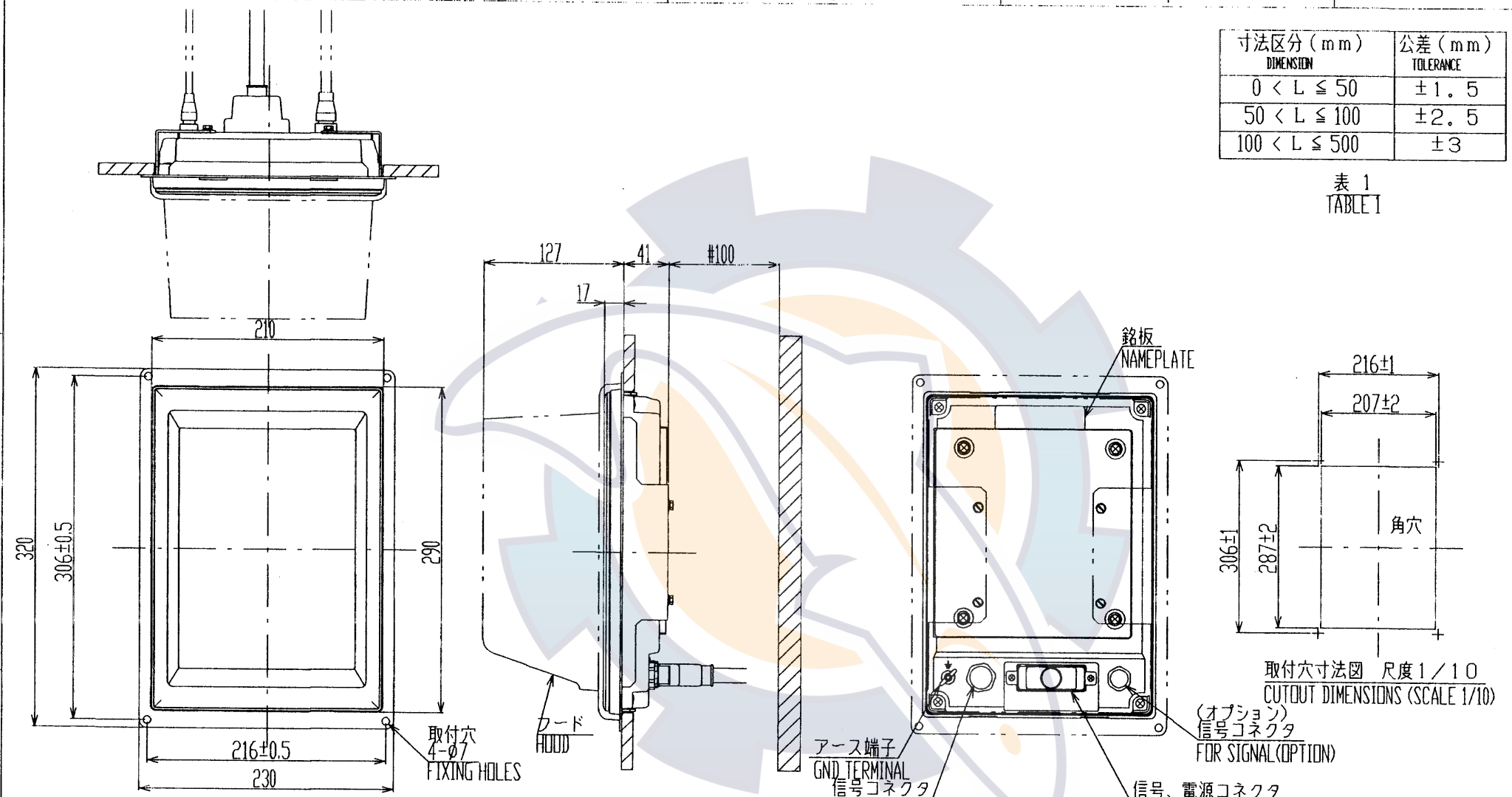

寸法区分（mm） DIMENSION	公差（mm） TOLERANCE
0 < L ≦ 50	±1.5
50 < L ≦ 100	±2.5
100 < L ≦ 500	±3

表 1
TABLE 1

取付穴寸法図　尺度1／10
CUTOUT DIMENSIONS (SCALE 1/10)

注 記
1）#印寸法は最小サービス空間寸法とする。
2）指定外の寸法公差は表1による。
3）取付用ネジは＋トラスタッピンネジ呼び径5x20を使用のこと。
4）装備ケーブルはサービス時、本体を前方に十分引出せるよう余裕を持たせること。

NOTE
1. #: RECOMMENDED SERVICE CLEARANCE.
2. TABLE 1 INDICATES TOLERANCE OF DIMENSIONS.
3. USE TAPPING SCREWS 5x20 FOR FIXING UNIT.
4. KEEP ENOUGH CABLE LENGTH BEHIND UNIT.

DRAWN Sep.17 '01 T.YAMASAKI		TITLE	MU-101C
CHECKED Sep18'01		名称	表示部（埋込装備）
APPROVED Sep18'01	FCV-1200L/LM		外寸図
SCALE 1/5 MASS 3.0 ±10% kg		NAME	MONITOR UNIT (FLASH MOUNT)
DWG.No. C2365-G12-B	02-127-1830-G0		OUTLINE DRAWING

FURUNO ELECTRIC CO., LTD.

D - 8A

FURUNO

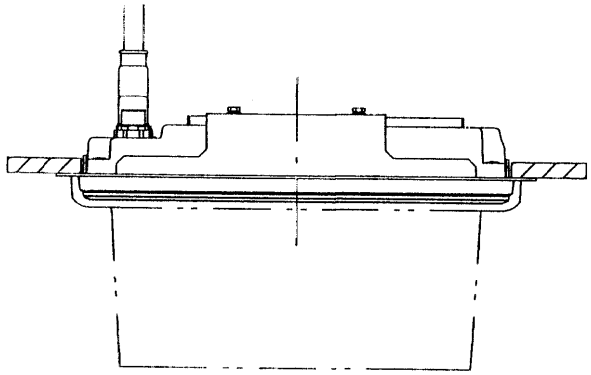

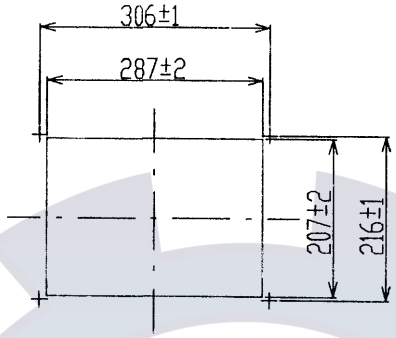

取付穴寸法図　尺度1／10

CUTOUT DIMENSIONS (SCALE: 1/10)

寸法区分（mm） DIMENSION	公差（mm） TOLERANCE
0 < L ≦ 50	±1.5
50 < L ≦ 100	±2.5
100 < L ≦ 500	±3

表 1
TABLE 1

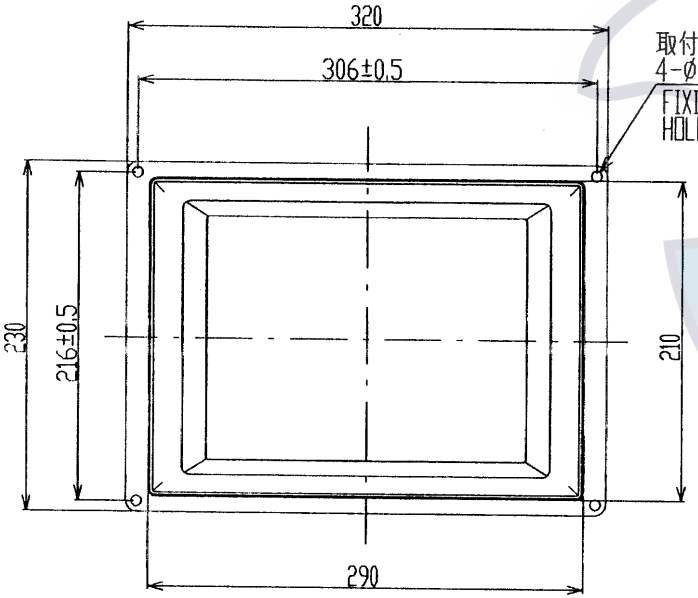

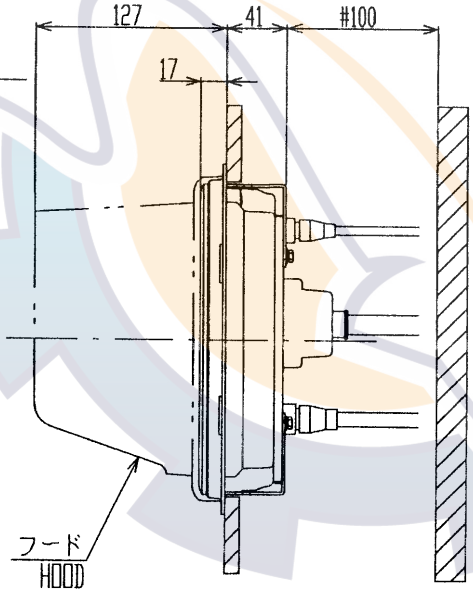

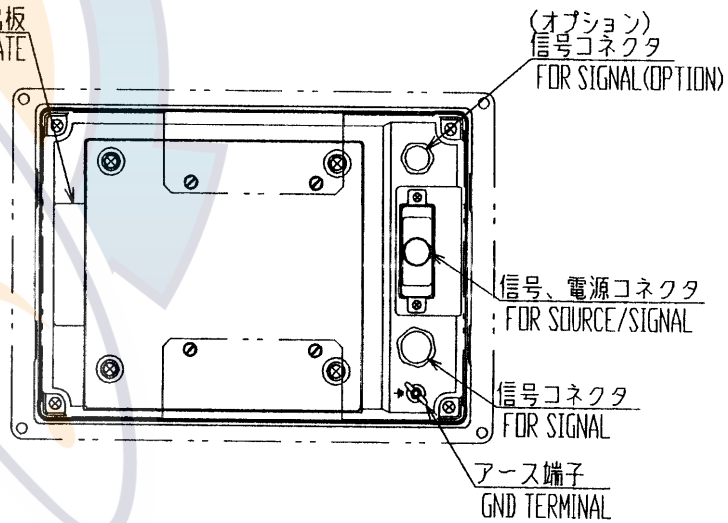

注 記　1）#印寸法は最小サービス空間寸法とする。
2）指定外の寸法公差は表1による。
3）取付用ネジは＋トラスタッピンネジ呼び径5x20を使用のこと。
4）装備ケーブルはサービス時、本体を前方に十分引出せるよう余裕を持たせること。

NOTE
1. # RECOMMENDED SERVICE CLEARANCE.
2. TABLE 1 INDICATES TOLERANCE OF DIMENSIONS.
3. USE TAPPING SCREWS 5x20 FOR FIXING UNIT.
4. KEEP ENOUGH CABLE LENGTH BEHIND UNIT.

DRAWN Sep 17 '01 I.YAMASAKI		TITLE	MU-101C
CHECKED Sep 18 '01 Y.K		名称	表示部（埋込装備）
APPROVED Sep 18 '01 Y.K	FCV-1280L/LM		外寸図
SCALE 1/5 MASS 3.0 ±10% kg		NAME	MONITOR UNIT (FLASH MOUNT)
DWG.No. C2365-G13-B	02-127-1930-G0		OUTLINE DRAWING

FURUNO ELECTRIC CO., LTD.

D-8R

表1 TABLE 1

寸法区分(mm) DIMENSION	公差(mm) TOLERANCE
0 < L ≦ 50	±1.5
50 < L ≦ 100	±2.5

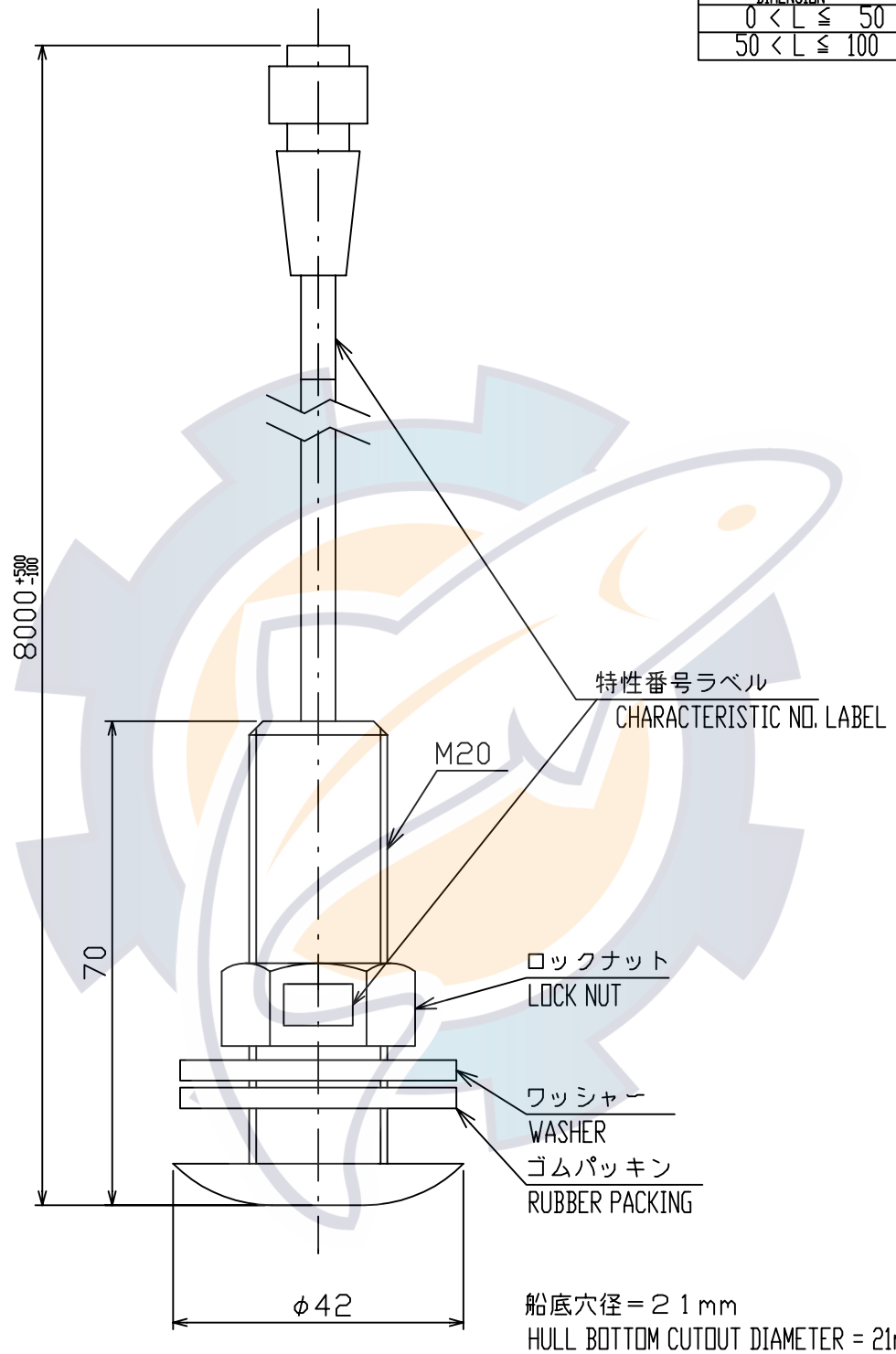

船底穴径＝２１mm
HULL BOTTOM CUTOUT DIAMETER = 21mm (0.8")

注記
１）指定なき寸法公差は表１による。

NOTE
1. TABLE 1 INDICATES TOLERANCE OF DIMENSIONS.

DRAWN Nov. 14 '02 T.YAMASAKI		TITLE	T-02MSB
CHECKED Nov. 14 '02 Y.KIMURA		名称	水温センサー
APPROVED Nov. 14, '02 Y. Kimura	T-2000		外寸図
SCALE 1/1	MASS 0.5 ±10% kg	NAME	THERMO SENSOR
DWG.No. C4322-007- C			OUTLINE DRAWING

FURUNO ELECTRIC CO., LTD.

FURUNO

D - 10

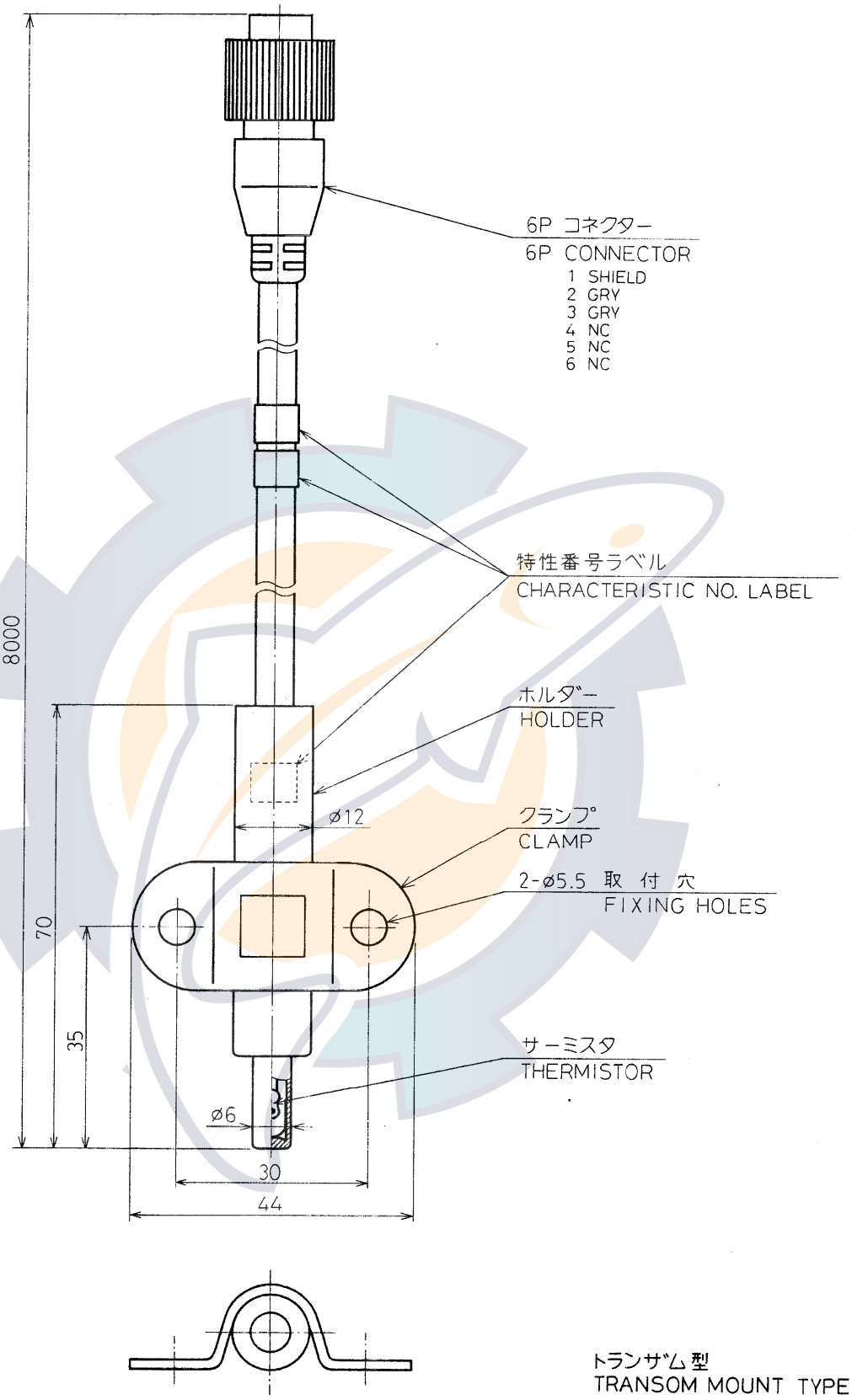

トランザム型
TRANSOM MOUNT TYPE

品番 ITEM	品名 NAME	材質 MATERIAL	数量 Q'TY	図番 DWG.NO.	摘要 REMARKS

承認 APPROVED	FEB・28・'89 T.NAKANO	三角法 THIRD ANGLE PROJECTION		名称 TITLE	T-02MTB 水温センサー TEMPERATURE SENSOR
検図 CHECKED	Feb・28・'89 T.KODA	尺度 SCALE	1/1		
製図 DRAWN	Feb・28・'89 T.MIYOSHI	質量 MASS	kg	図番 DWG.NO.	C2317—G01— B

FURUNO ELECTRIC CO., LTD.

FURUNO

D－11

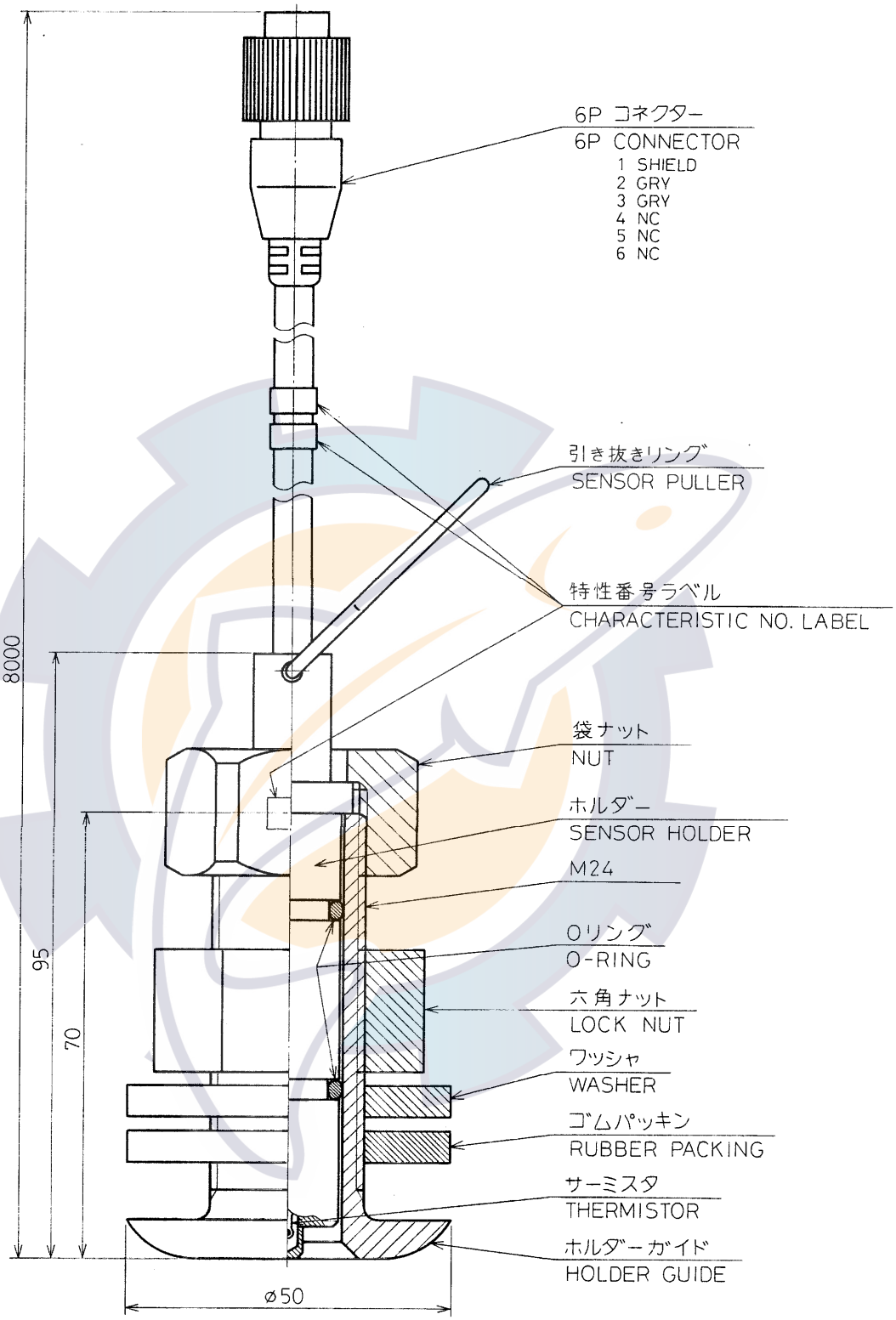

船底貫通型（取り外し可能）
THRU HULL MOUNT

品番 ITEM	品名 NAME	材質 MATERIAL	数量 Q'TY	図番 DWG.NO.	摘要 REMARKS

承認 APPROVED	FEB.28.'89 T.NAKAUO	三角法 THIRD ANGLE PROJECTION		名称 TITLE	T-03MSB 水温センサー TEMPERATURE SENSOR
検図 CHECKED	Feb.28.'89 T.KODA	尺度 SCALE	1/1		
製図 DRAWN	Feb.28.'89 T.MIYOSHI	質量 MASS	kg	図番 DWG.NO.	C2317－G02－ B

FURUNO ELECTRIC CO., LTD.

FURUNO

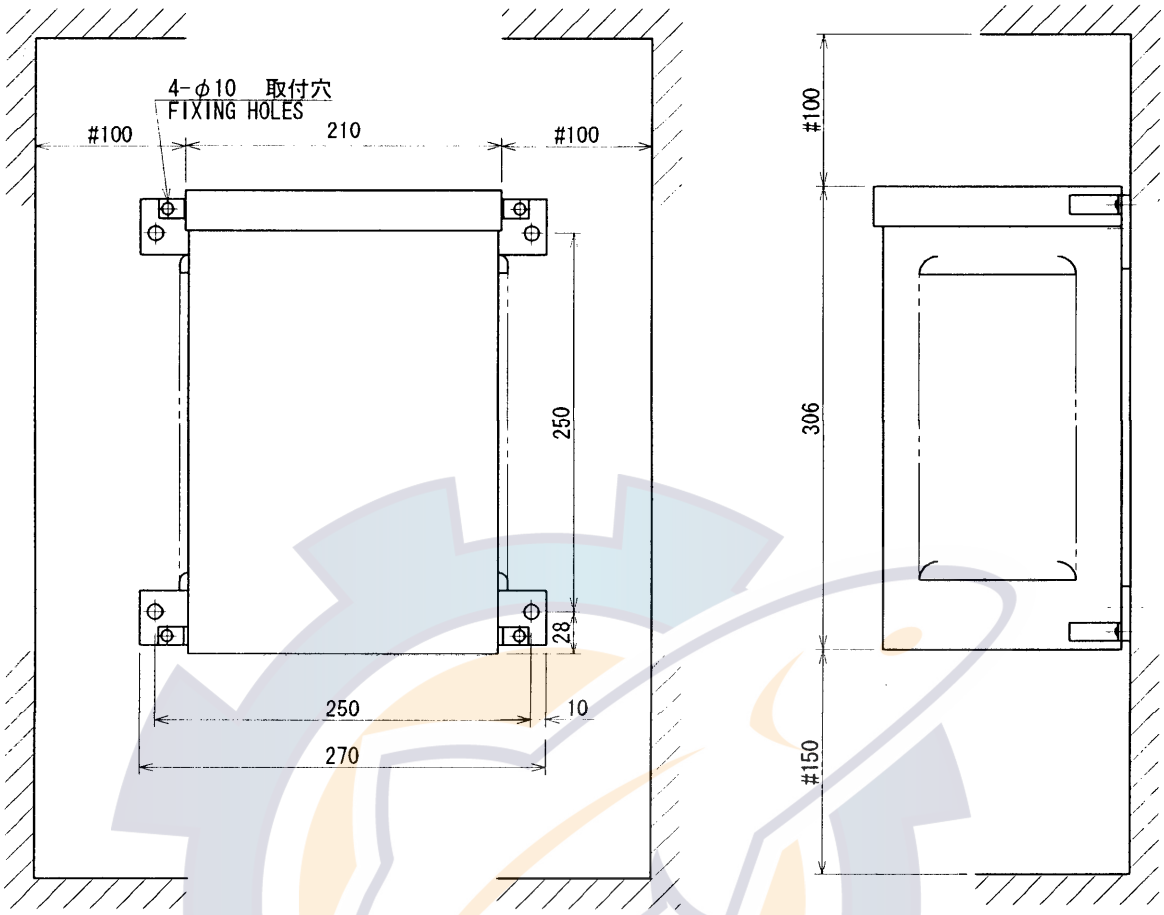

NOTE 1. #：推奨サービス空間
RECOMMENDED SERVICE CLEARANCE.

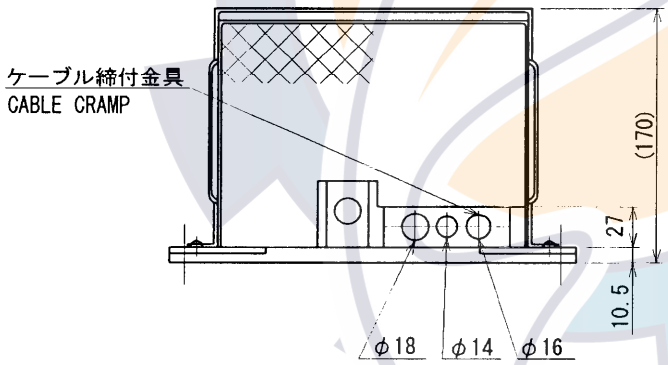

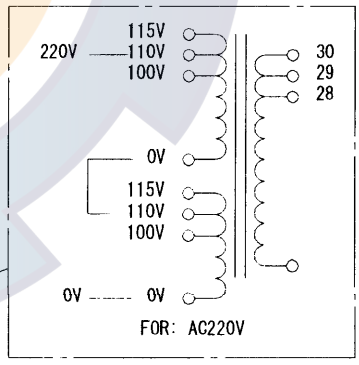

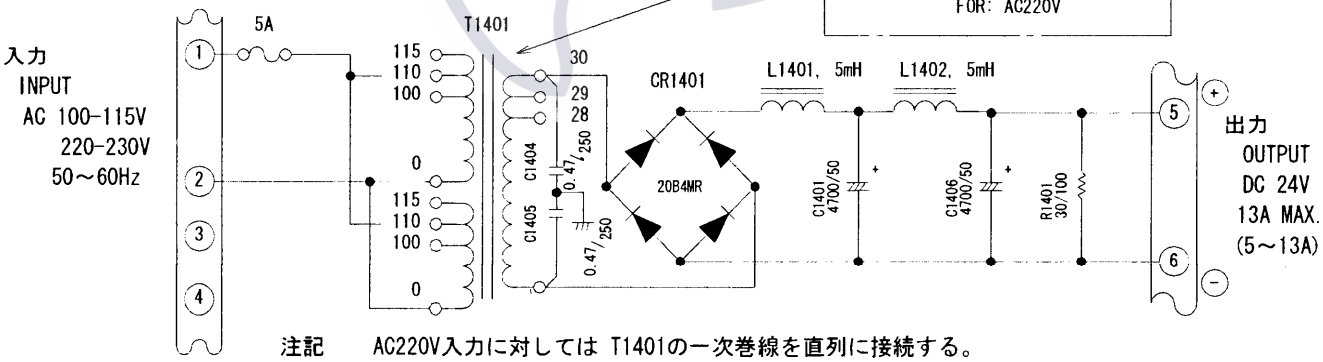

注記 AC220V入力に対しては T1401の一次巻線を直列に接続する。
NOTE FOR 220V AC INPUT, CONNECT T1401 PRIMARY WINDINGS IN SERIES.

DRAWN Aug16'00 T.YAMASAKI		TITLE	RU-1746B-2
CHECKED Aug17'00 Y.Kim		名称	整流器
APPROVED Aug17'00 Y.Kim			外寸図
SCALE 1/5	MASS 17 kg ±10%	NAME	RECTIFIER UNIT
DWG. No. C3002-002- N			OUTLINE DRAWING

FURUNO ELECTRIC CO., LTD.

FURUNO

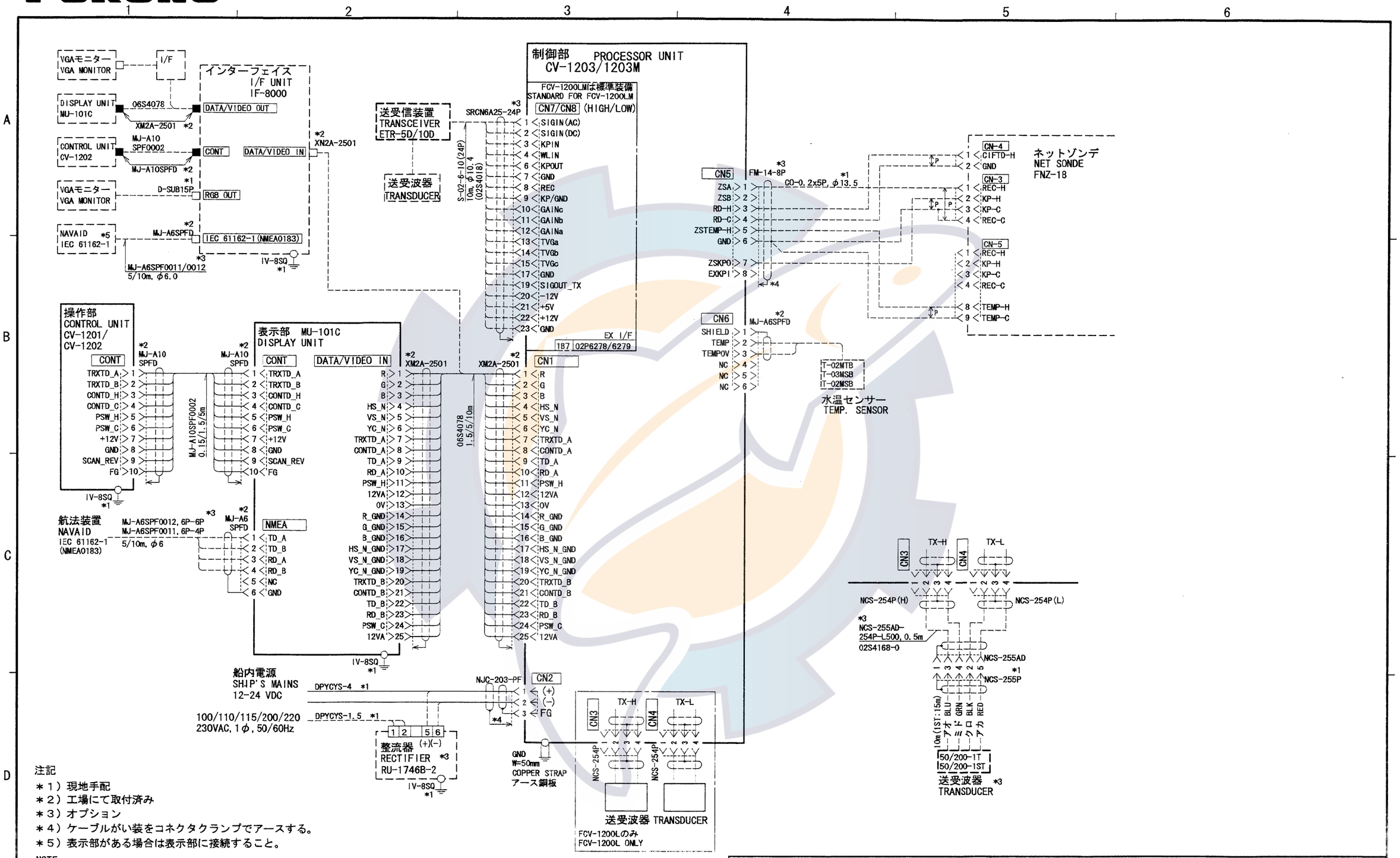

注記

＊１）現地手配
＊２）工場にて取付済み
＊３）オプション
＊４）ケーブルがい装をコネクタクランプでアースする。
＊５）表示部がある場合は表示部に接続すること。

NOTE

*1. LOCAL SUPPLY.
*2. FITTED AT FACTORY.
*3. OPTION
*4. GROUNDING THRU CONNECTOR CLAMP W/ ARMOR SHEATH.
*4. CONNECT DISPLAY UNIT IF PROVIDED.

操作部
CONTROL UNIT
CV-1201: 縦型
PORTRAIT TYPE
CV-1202: 横型
LANDSCAPE TYPE

DRAWN Dec. 20 '01 T. YAMASAKI		TITLE	FCV-1200L/1200LM
CHECKED Dec 27 '01 Y. Kim		名称	カラー魚群探知機
APPROVED Dec 27 '01 Y. Kim			相互結線図
SCALE / MASS kg		NAME	COLOR VIDEO SOUNDER
DWG. No. C2365-C01- G			INTERCONNECTION DIAGRAM

FURUNO ELECTRIC CO., LTD.

FURUNO

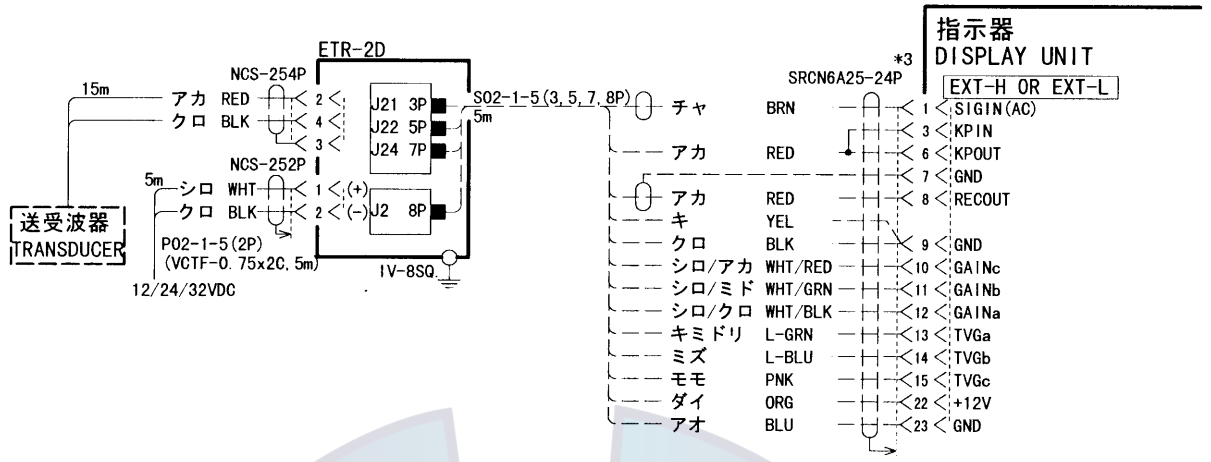

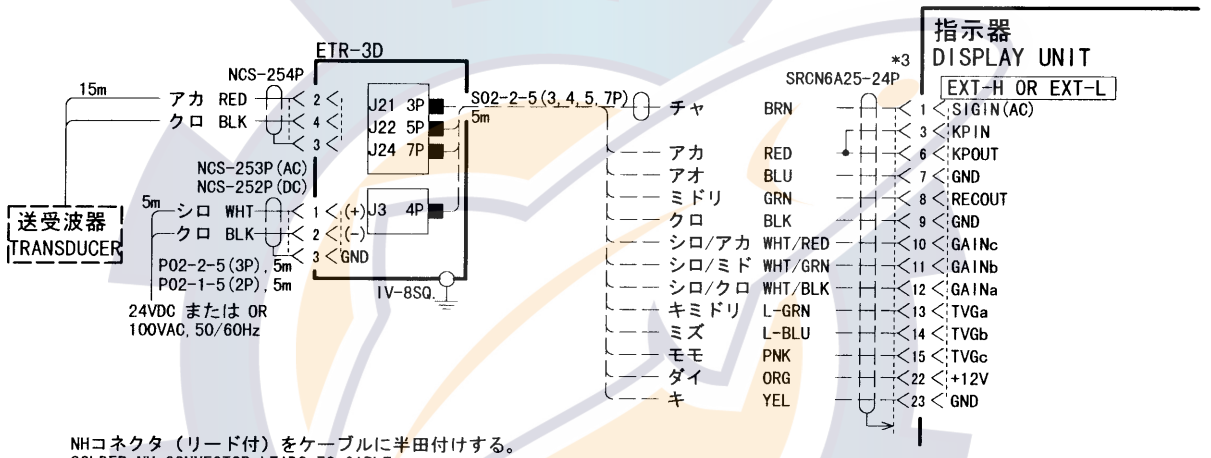

NHコネクタ（リード付）をケーブルに半田付けする。
SOLDER NH-CONNECTOR LEADS TO CABLE.

NH	ETR-2D		ETR-3D	
1	チャ	BRN	チャ	BRN
2				
3	シロ	WHT	シロ	WHT
4				
5				
6	アカ	RED		
7	シールド	SHIELD	キ＋アオ	YEL+BLU
8	アカ	RED	ミドリ	GRN
9	キ＋アオ	YEL+BLU	クロ	BLK
10	シロ/アカ	WHT/RED	シロ/アカ	WHT/RED
11	シロ/ミド	WHT/GRN	シロ/ミド	WHT/GRN
12	シロ/クロ	WHT/BLK	シロ/クロ	WHT/BLK
13	キミドリ	L-GRN	キミドリ	L-GRN
14	ミズ	L-BLU	ミズ	L-BLU
15	モモ	PNK	モモ	PNK
18	ダイ	ORG	ダイ	ORG

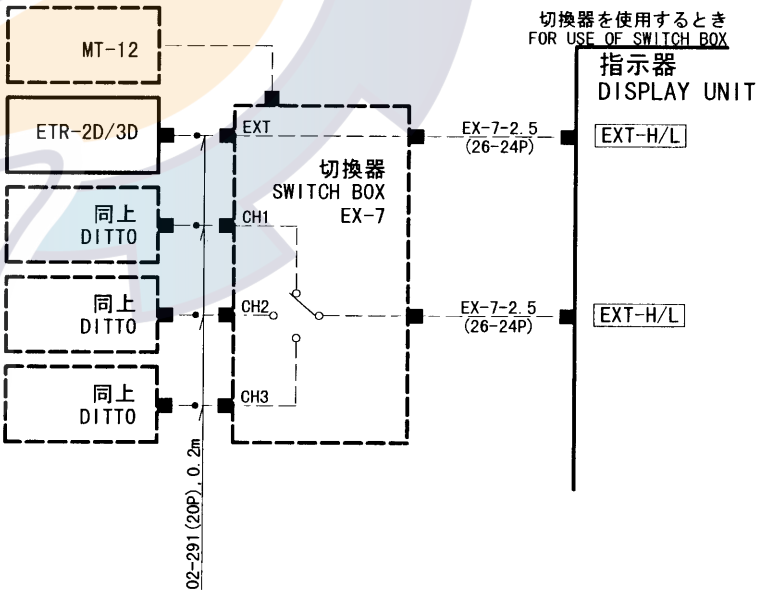

注記
1）＊：造船所支給
2）ケーブルクランプでアースに落とす。
3）オプション。

NOTE
1. *: SHIPYARD SUPPLY.
2. GROUND THRU CONNECTOR CLAMP.
3. OPTON.

DRAWN Oct 4'99 T.YAMASAKI		TITLE ETR-2D/3D
CHECKED Oct 4'99 K.Kusunoki		名称 送受信装置
APPROVED Oct 4'99 K.Kusunoki		相互結線図
SCALE / MASS kg		NAME TRANSCEIVER UNIT
DWG. No. C2019-C01- B		INTERCONNECTION DIAGRAM

FURUNO ELECTRIC CO., LTD.

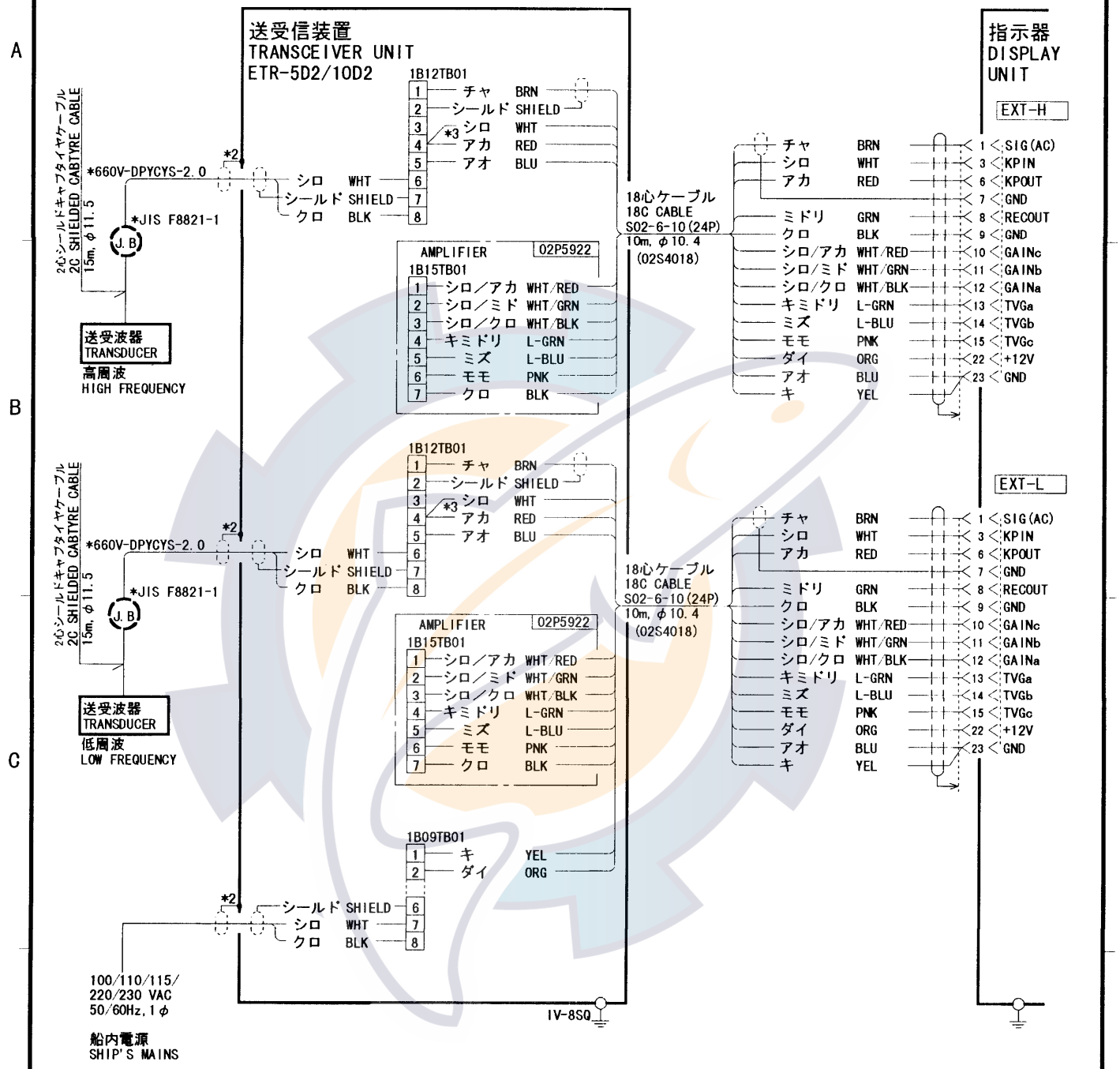

注記

1）＊：造船所支給

2）ケーブルクランプでアースに落とす。

3）赤と白の芯線は短絡する。

NOTE

1. *: SHIPYARD SUPPLY.
2. GROUND THRU CONNECTOR CLAMP.
3. CONNECT RED AND WHITE LINE EACH OTHER.

DRAWN May 18'00 T.YAMASAKI		TITLE ETR-5D2/10D2
CHECKED May 18'00 T.Kim		名称 送受信装置
APPROVED May 18'00 T.Kim		相互結線図
SCALE / MASS kg		NAME TRANSCEIVER UNIT
DWG. No. C2020-C01- C		INTERCONNECTION DIAGRAM

FURUNO ELECTRIC CO., LTD.

FURUNO

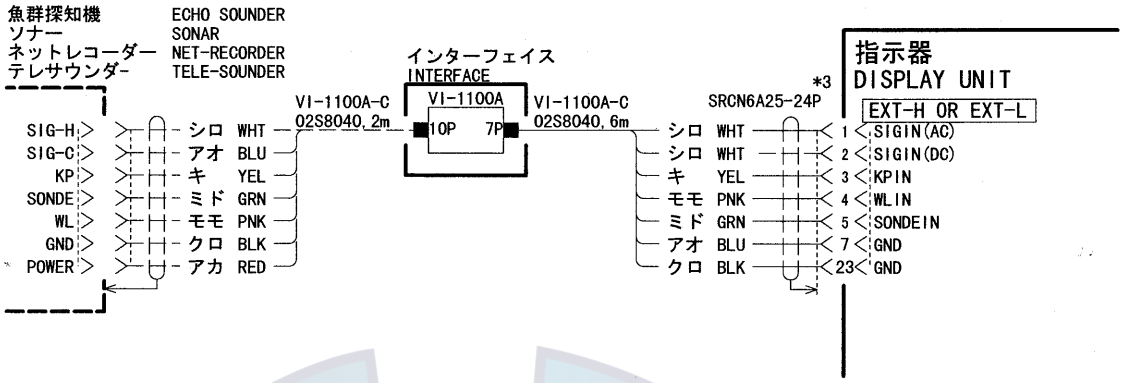

NHコネクタ（リード付）をケーブルに半田付けする。
SOLDER NH-CONNECTOR LEADS TO CABLE.

NH	VI-1100A	
1	シロ(AC)	WHT(AC)
2	シロ(DC)	WHT(DC)
3	キ	YEL
4	モモ	PNK
5	ミドリ	GRN
6		
7	アオ	BLU
8		
9	クロ	BLK

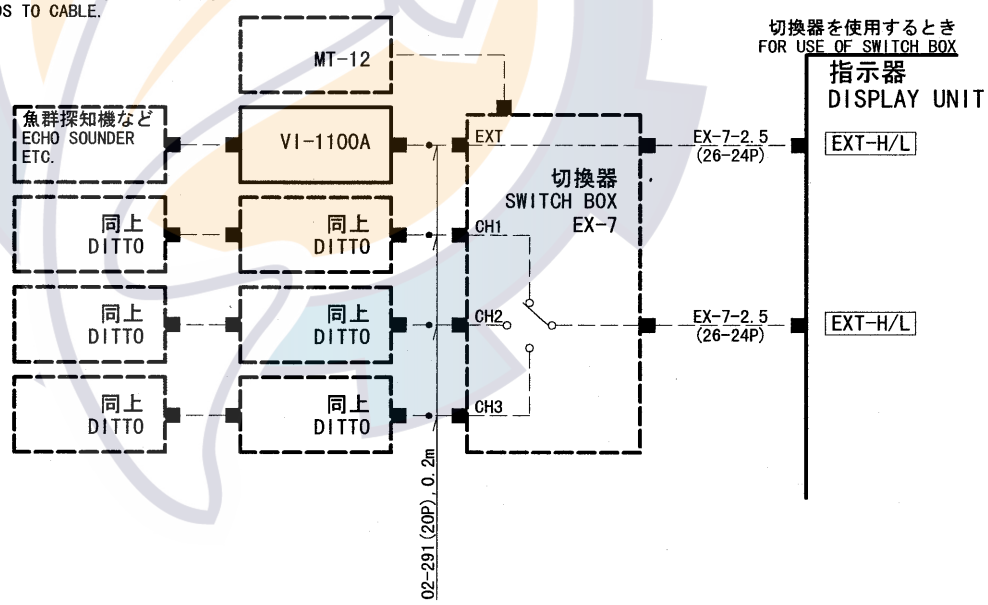

注記
1）＊：造船所支給
2）ケーブルクランプでアースに落とす。
3）オプション。

NOTE
1. *: SHIPYARD SUPPLY.
2. GROUND THRU CONNECTOR CLAMP.
3. OPTON.

DRAWN July 30 '99 T.YAMASAKI		TITLE VI-1100A
CHECKED July 30 '99 K.Kusunoki		名称 インターフェイス
APPROVED July 30 '99 K.Kusunoki		相互結線図
SCALE / MASS kg		NAME INTERFACE UNIT
DWG. No. C2018-C01- A		INTERCONNECTION DIAGRAM

FURUNO ELECTRIC CO., LTD.