FURUNO

INSTALLATION MANUAL

DOPPLER SONAR CURRENT INDICATOR

MODEL CI-35/35H

FURUNO ELECTRIC CO., LTD.
NISHINOMIYA, JAPAN

9-52, Ashihara-cho,
Nishinomiya, Japan

Telephone: 0798-65-2111
Telefax: 0798-65-4200

•Your Local Agent/Dealer

FIRST EDITION : FEB. 1997
F1 : OCT. 7, 2002

PUB. No. IME-72440-F1
(DAMI) CI-35/35H

00080797801

IME72440F10

⚠ SAFETY INSTRUCTIONS

"**DANGER**", "**WARNING**" and "**CAUTION**" notices appear throughout this manual. It is the responsibility of the installer of the equipment to read, understand and follow these notices. If you have any questions regarding these safety instructions, please contact a FURUNO agent or dealer.

⚠ **DANGER**	This notice indicates a potentially hazardous situation which, if not avoided, will result in death or serious injury.
⚠ **WARNING**	This notice indicates a potentially hazardous situation which, if not avoided, could result in death or serious injury.
⚠ **CAUTION**	This notice indicates a potentially hazardous situation which, if not avoided, could result in minor or moderate injury, or property damage.

⚠ WARNING

ELECTRICAL SHOCK HAZARD
Do not open the equipment unless totally familiar with electrical circuits and service manual.

Only qualified personnel should work inside the equipment.

Turn off the power at the switchboard before beginning the installation.
Post a warning sign near the switchboard to ensure that the power will not be applied while the equipment is being installed.

Serious injury or death can result if the power is not turned off, or is applied while the equipment is being installed.

⚠ CAUTION

Ground the equipment.

Ungrounded equipment can give off or receive electro-magnetic interference or cause electrical shock.

Confirm that the power supply voltage is compatible with the voltage rating of the equipment.

Connection to the wrong power supply can cause fire or equipment damage. The voltage rating appears on the label at the rear of the equipment.

Observe the following compass safe distances to prevent interference to a magnetic compass:

	Standard compass	Steering compass
Display unit	1.3 m	1.0 m
Terminal unit	1.7 m	1.3 m

CONTENTS

Complete Set 3

System Diagram 5

Installation Materials ..... 6 – 12

Accessories 13

Spare Parts ..... 14 – 18

CHAPTER 1 GENERAL DESCRIPTION ..... 1-1 – 1-6
- 1.1 Selection of Installation Site 1-1
- 1.2 Grounding 1-4
- 1.3 Alteration of Power Supply Voltage 1-6

CHAPTER 2 MOUNTING ..... 2-1 – 2-10
- 2.1 Display Unit 2-1
- 2.2 Transceiver Unit 2-2
- 2.3 Matching Box/Junction Box 2-3
- 2.4 Hull (Transducer) Unit for CI-35H 2-4
- 2.5 DC-AC Inverter 2-8
- 2.6 Hull (Transducer) Unit for CI-35 2-9

CHAPTER 3 CONNECTIONS ..... 3-1 – 3-16
- 3.1 Cabling 3-1
- 3.2 Display Unit 3-2
- 3.3 Transceiver Unit 3-3
- 3.4 Junction Box 3-5
- 3.5 External Equipment 3-7
  - 3.5.1 Connection of external equipment to the display unit 3-7
  - 3.5.2 Connection of external to the transceiver unit 3-8
- 3.6 DC-AC Inverter (TR-2450 or CSH-5050) 3-12
- 3.7 Matching Box 3-15

CHAPTER 4 POST-INSTALLATION CHECK AND ADJUSTMENT ..... 4-1 – 4-25
- 4.1 Line Voltage 4-1
- 4.2 LED Status Check 4-4
- 4.3 DIP Switch Setting 4-9
- 4.4 TX Output Check 4-14
- 4.5 External Noise and Interference Check 4-15
  - 4.5.1 External Noise Check 4-15
  - 4.5.2 Interference Check 4-16
  - 4.5.3 Interference Rejection 4-17

4.6 Sea Trial Check 4-20
4.6.1 Ship's Speed Test 4-20
4.6.2 Current Information Check 4-20
4.6.3 Course Calibration 4-22

Outline Drawings D-1

Interconnection Diagrams S-1

Complete Set

Standard Supply

No.	Name	Type	Mass (kg)	Q'ty	Remarks
1	Display unit	CI-3500	20	1	for CI-35
		CI-3500-HK			for CI-35H
2	Transceiver unit	CI-3510	32	1	for CI-35
		CI-3510-HK			for CI-35H
3	Matching Box	CI-3540		1	for CI-35
	Junction Box	CI-630-HK	2		for CI-35H
4	Transducer	CI-240		1	for CI-35
		CI-3520-1	22	1	for CI-35H, w/10 m cable
		CI-3520-2	27		for CI-35H, w/20 m cable
5	Installation Materials			1 SET	
6	Accessories	FP66-00400		1 SET	
7	Spare Parts	SP66-00400		1 SET	
		SP66-00410			

Optional Equipment

NO.	Name	Type	Mass (kg)	Remarks
1	DC-AC Inverter	TR-2450	35	
2	DC-AC Inverter	CSH-5050	21	
3	Distribution Unit	DS-370	19	
4	Digital Indicator	DS-350	7.0	
		DS-351	4.0	Flush mount
5	Remote Box	DS-359	0.7	for DS-351
6	Analog Indicator	DS-381-S	6.4	for CI-35
		DS-381-HK		for CI-35H
		DS-382	6.0	for CI-35
		DS-382-HK		for CI-35H
		MF-22A-1	6.4	-10 to 30 kt, Φ200, Flush mount
		MF-22A-2	6.0	-10 to 30 kt, Φ200, Bulkhead mount
		MF-22A-3	1.3	-10 to 30 kt, Φ200, Flush mount
		MF-22A-4	4.4	-10 to 30 kt, Φ200, Flush mount (less brim)
		MF-22A-5	2.8	

No.	Name	Type	Mass (kg)	Remarks
6	Analog Indicator	MF-22A-6	6.0	-10 to 30 kt, ϕ200, Flush mount
		MF-22A-7	6.0	-10 to 30 kt, ϕ200, Bulkhead mount (counterclockwise dial)
		MF-22A-8	6.0	-10 to 30 kt, ϕ200, Bulkhead mount (counterclockwise dial)
		MF-22A-9	2.3	-10 to 30 kt, ϕ150
		FE-90	1.2	-10 to 30 kt, Flush mount
		FL-90	1.4	-10 to 30 kt, Flush mount
		DS-761	6.0	-10 to 30 kt, Flush mount
		DS-762	6.0	-10 to 30 kt, Bulkhead mount
		DS-763	1.3	-10 to 30 kt, Flush mount (small size)
		DS-771	6.0	-10 to 20 kt, Flush mount
		DS-772	6.0	-10 to 20 kt, Bulkhead mount
		DS-773	1.3	-10 to 20 kt, Flush mount (small size)
7	Range Switch Box	DS-389	0.75	Flush mount
8	Dimmer	MF-22L-1-100V	1.2	Flush mount
		MF-22L-1-200V		
		MF-22L-2-100V	1.3	Bulkhead mount
		MF-22L-2-200V		
9	Distance Indicator	DS-730	1.7	Flush mount/ Tabletop mount

FURUNO

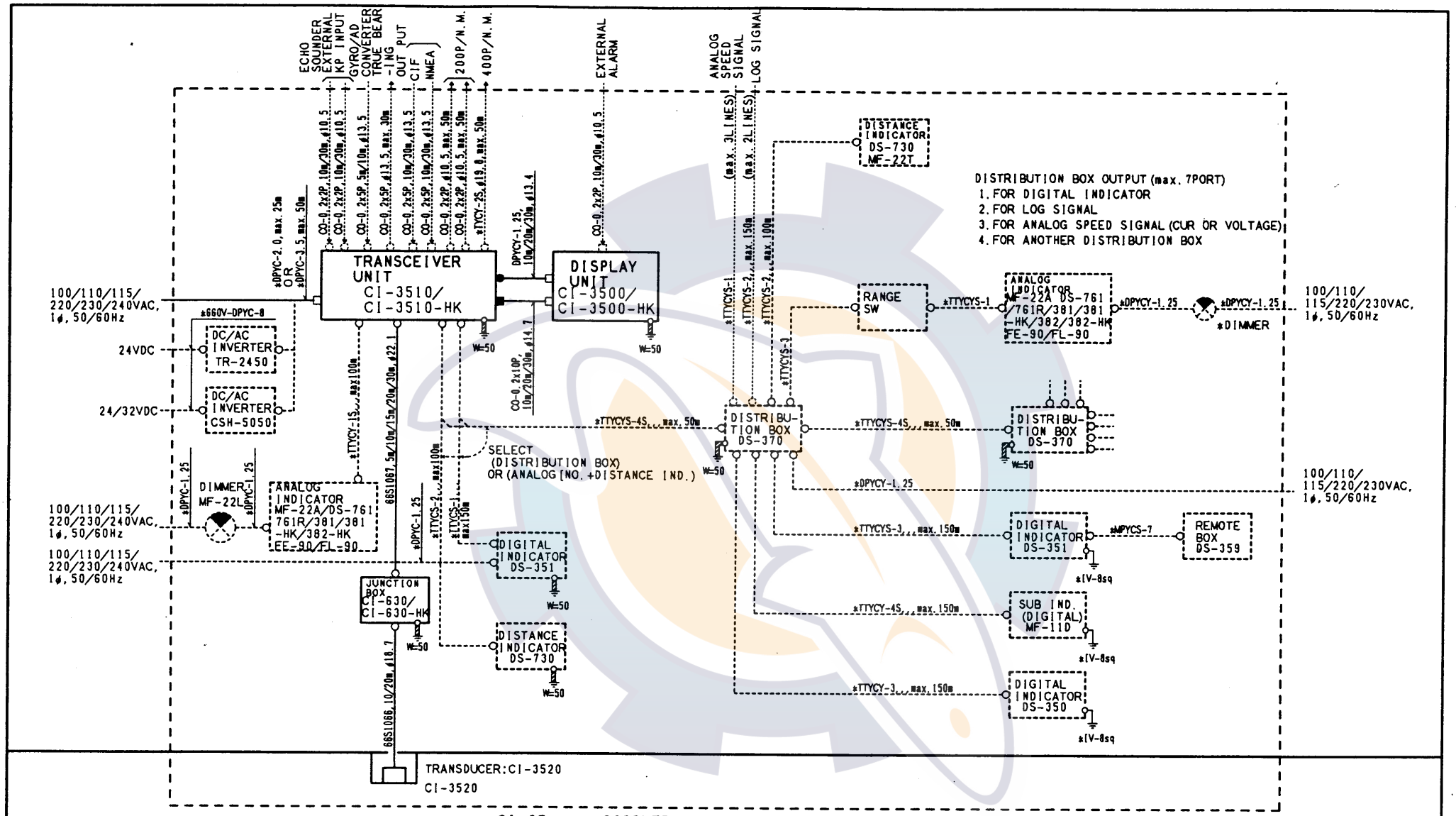

CI-35 DOPPLER SONAR CURRENT INDICATOR

NOTE

- *: SHIPYARD SUPPLY
- : CONNECTOR (: FACTORY-FITTED)
- : CRIMP-ON LUG (: FACTORY-FITTED)
- : GROUNDING COPPER STRAP
- : GROUNDING WIRE IV-8sq.
- : CABLE SUPPLY SIDE
- ---: OPTIONAL SUPPLY

CO-0.2x2P: CO-SPEVV-SB-C 0.2x2P, φ10.5
CO-0.2x5P: CO-SPEVV-SB-C 0.2x5P, φ13.5

DRAWN Jan. 29'97 Y.SAISU			TYPE CI-35/35H
CHECKED JAN. 29'97 K.KUSUNOKI			
APPROVED JAN. 29'97 K.KUSUNOKI			
SCALE / MASS kg			NAME DOPPLER SONAR CURRENT INDICATOR
DWG. NO. E7244D02A000			SYSTEM DIAGRAM

FURUNO ELECTRIC CO., LTD.

FURUNO

CODE NO.	006-924-570
TYPE	CP66-00701

工事材料表 INSTALLATION MATERIALS	CI-35/35H カラー潮流観測装置 音波ログ DOPPLER SONAR CURRENT INDICATOR (指示器用)FOR DISPLAY

番号 No.	名称 NAME	略図 OUTLINE	型名／規格 DESCRIPTIONS	数量 Q'TY	用途／備考 REMARKS
1	アース板 COPPER STRAP		WEA-1004-0 CODE NO. 500-310-040	1	
2	コネクタ CONNECTOR	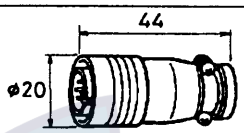	PRC03-12A10-5M10.5 CODE NO. 000-110-679	1	P33 (外部警報用) FOR P33 EXTERNAL ALARM
3	コネクタ CONNECTOR	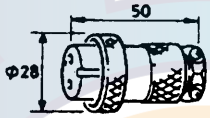	NCS-252-P CODE NO. 000-506-501	1	P31 (電源用) FOR P31 POWER CONNECTOR
4	コネクタ CONNECTOR	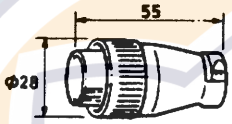	SRCN6A21-16P CODE NO. 000-508-664	1	P32 (信号用) FOR P32 FOR SIGNAL CONNECTOR
			CODE NO.		
			CODE NO.		
			CODE NO.		
			CODE NO.		
			CODE NO.		
			CODE NO.		

(略図の寸法は、参考値です。)
DIMENSIONS IN DRAWING FOR REFERENCE ONLY.

図番 DWG. NO. C7242-M01-B (1/1)

FURUNO ELECTRIC CO., LTD

FURUNO

CODE NO.	006-924-580
TYPE	CP66-00702

工事材料表
INSTALLATION MATERIALS

CI-35/35H カラー潮流観測装置 音波ログ
DOPPLER SONAR CURRENTINDICATOR
(送受信演算部用) FOR TRANSCEIVER UNIT

番号 No.	名称 NAME	略図 OUTLINE	型名/規格 DESCRIPTIONS	数量 Q'TY	用途/備考 REMARKS
1	アース板 COPPER STRAP		WEA-1004-0 CODE NO. 500-310-040	1	
2	コネクタ CONNECTOR	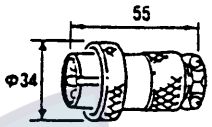	NCS-303-P CODE NO. 000-110-561	1	船内電源用 FOR SIP'S MAINS
3	圧着端子 CRIMP-ON LUG	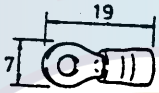	FV0.5-3.7 キ YEL CODE NO. 000-118-307	10	TB1用 FOR TB1
4	圧着端子 CRIMP-ON LUG	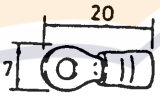	FV2-P4 アオ BLU CODE NO. 000-120-199	5	4対ケーブルシールド線用 FOR SHIELD A PAIR CABLE
5	圧着端子 CRIMP-ON LUG	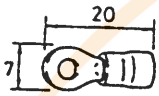	FV2-P3.5 BUL CODE NO. 000-120-200	6	TB1 シールド線用 FOR SHIELD TO TB1
6	コネクタ CONNECTOR	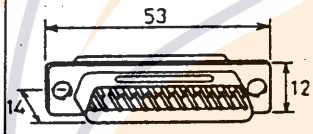	17JE-23250-02(D1) CODE NO. 000-120-201	2	P103(NMEA用) FOR P103 (NMEA)
7	コネクタフード HOUSING CASE	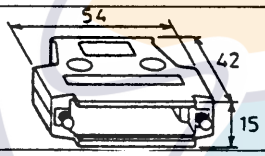	17JE-25H-1A CODE NO. 000-120-202	2	P103(NMEA用) FOR P103 (NMEA)
8	コネクタ CONNECTOR	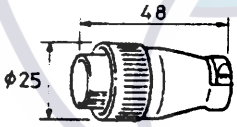	SRCN6A16-10P CODE NO. 000-508-663	1	P102(CIF用) FOR P102 (CIF)
9	コネクタ CONNECTOR	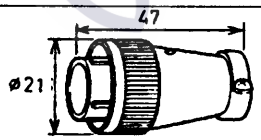	SRCN6A13-5S CODE NO. 000-508-666	1	P105用 FOR P105
10	圧着端子 CRIMP-ON LUG	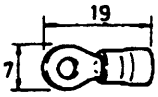	FV1.25-M3 アカ RED CODE NO. 000-538-110	16	TB1用 FOR TB1

(略図の寸法は、参考値です。)
DIMENSIONS IN DRAWING FOR REFERENCE ONLY.

図番 (1/2)
DWG. NO. C7242-M02-B

FURUNO ELECTRIC CO., LTD

FURUNO

CODE NO.	006-924-580
TYPE	CP66-00702

工事材料表
INSTALLATION MATERIALS

CI-35/35H カラー潮流観測装置 音波ログ
DOPPLER SONAR CURRENT INDICATOR
(送受信演算部用) FOR TRANSCEIVER UNIT

番号 No.	名称 NAME	略図 OUTLINE	型名／規格 DESCRIPTIONS	数量 Q'TY	用途／備考 REMARKS
11	圧着端子 CRIMP-ON LUG	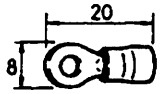	FV1.25-4 アカ RED CODE NO. 000-538-114	9	4対ケーブル芯線用 FOR CORSE OF 4 PAIR CABLE
12	圧着端子 CRIMP-ON LUG	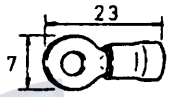	FV5.5-S4 キ YEL CODE NO. 000-538-121	2	4対ケーブル一括シールド線用 FOR OUTER SHIELD OF 4 PAIR CABLE
13	圧着端子 CRIMP-ON LUG	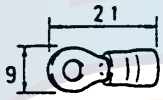	FV2-5 アオ BLU CODE NO. 000-107-331	14	あじろ鎧装アース用 FOR GND OF SHIELD OF ARMOR
14	ビニール線 VINYL WIRE	 L=5m	VSF-2.0SQ クロ BLK *5M* CODE NO. 000-121-401	1	あじろ鎧装アース用 FOR GND OF SHIELD OF ARMOR
			CODE NO.		
			CODE NO.		
			CODE NO.		
			CODE NO.		
			CODE NO.		
			CODE NO.		

(略図の寸法は、参考値です。)
DIMENSIONS IN DRAWING FOR REFERENCE ONLY.

図番 (2/2)
DWG. NO. C7242-M03-B

FURUNO ELECTRIC CO., LTD

FURUNO

CODE NO.	
TYPE	

工事材料表
INSTALLATION MATERIALS

カラー潮流観測装置
CI-35/35H 音波ログ
DOPPLER SONAR CURRENT INDICATOR
(信号ケーブル用) FOR SIGNAL CABLE

番号 No.	名称 NAME	略図 OUTLINE	型名／規格 DESCRIPTIONS	数量 Q'TY	用途／備考 REMARKS
1	信号ケーブル組品 SIGNAL CABLE ASSEMBLY	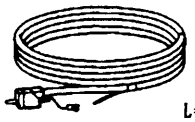 L=10m	S66-4-10(20P) *10M*(CO-SPEVV-SB -C 0.2X10P) CODE NO. 006-924-510	1	
1	信号ケーブル組品 SIGNAL CABLE ASSEMBLY	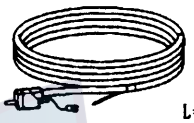 L=20m	S66-4-20(20P) *20M*(CO-SPEVV-SB -C 0.2X10P) CODE NO. 006-924-520	1	
1	信号ケーブル組品 SIGNAL CABLE ASSEMBLY	 L=30m	S66-4-30(20P) *30M*(CO-SPEVV-SB -C 0.2X10P) CODE NO. 006-924-530	1	
2	電源ケーブル組品 POWER CABLE ASSEMBLY	 L=10m	P66-1-10 *10M* (DPYCY-1.25,10M) CODE NO. 006-924-540	1	
2	電源ケーブル組品 POWER CABLE ASSEMBLY	 L=20m	P66-1-20 *20M* (DPYCY-1.25,20M) CODE NO. 006-924-550	1	
2	電源ケーブル組品 POWER CABLE ASSEMBLY	 L=30m	P66-1-30 *30M* (DPYCY-1.25,30M) CODE NO. 006-924-560	1	
			CODE NO.		
			CODE NO.		
			CODE NO.		
			CODE NO.		

*1と2は同じ長さのものを選択すること。
SELECT SAME LENGTH CABLES.

(略図の寸法は、参考値です。)
DIMENSIONS IN DRAWING FOR REFERENCE ONLY.

図番 (1/1)
DWG. NO. C7242-M04-B

FURUNO ELECTRIC CO., LTD

FURUNO

CODE NO.	
TYPE	

工事材料表 INSTALLATION MATERIALS	CI-35/35H カラー潮流観測装置 音波ログ DOPPLER SONAR CURRENT INDICATOR (ケーブル用) FOR CABLE

番号 No.	名称 NAME	略図 OUTLINE	型名／規格 DESCRIPTIONS	数量 Q'TY	用途／備考 REMARKS
1	4対ケーブル 4P TWISTED PAIR CABLE	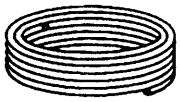 L=5m	66S1067 *5M* CODE NO. 000-120-210	1	
1	4対ケーブル 4P TWISTED PAIR CABLE	 L=10m	66S1067 *10M* CODE NO. 000-120-226	1	
1	4対ケーブル 4P TWISTED PAIR CABLE	 L=15m	66S1067 *15M* CODE NO. 000-120-227	1	
1	4対ケーブル 4P TWISTED PAIR CABLE	 L=20m	66S1067 *20M* CODE NO. 000-120-228	1	
1	4対ケーブル 4P TWISTED PAIR CABLE	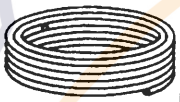 L=30m	66S1067 *30M* CODE NO. 000-120-229	1	
			CODE NO.		
			CODE NO.		
			CODE NO.		
			CODE NO.		
			CODE NO.		

(略図の寸法は、参考値です。)
DIMENSIONS IN DRAWING FOR REFERENCE ONLY.

図番 (1/1)
DWG. NO. C7242-M05-B

FURUNO ELECTRIC CO., LTD

FURUNO

CODE NO.	006-927-330
TYPE	CP66-00703

工事材料表
INSTALLATION MATERIALS

CI-35/35H カラー潮流観測装置 音波ログ
DOPPLER SONAR CURRENT INDICATOR
(接続箱用) FOR JUNCTION BOX

番号 No.	名称 NAME	略図 OUTLINE	型名／規格 DESCRIPTIONS	数量 Q'TY	用途／備考 REMARKS
1	アース板 COPPER STRAP		WEA-1004-0 CODE NO. 500-310-040	1	
2	+トラスタッピングネジ TAPPING SCREW	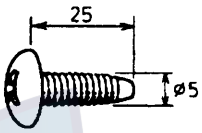	5X25 SUS304 1シュ CODE NO. 000-802-082	4	
3	圧着端子 CRIMP-ON LUG	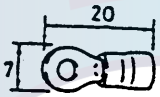	FV2-P4 アオ BLU CODE NO. 000-120-199	10	シールド線用 FOR SHIELD
4	圧着端子 CRIMP-ON LUG	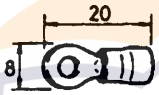	FV1.25-4 アカ RED CODE NO. 000-538-114	18	芯線用 FOR CORES
5	圧着端子 CRIMP-ON LUG	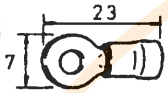	FV5.5-5 キ YEL CODE NO. 000-114-733	3	一活シールド鎧装アース用 FOR GROUND OF SHIELD AND ARMOR
			CODE NO.		
			CODE NO.		
			CODE NO.		
			CODE NO.		
			CODE NO.		

(略図の寸法は、参考値です。)
DIMENSIONS IN DRAWING FOR REFERENCE ONLY.

図番 (1/1)
DWG. NO. C7242-M06-B

FURUNO ELECTRIC CO., LTD

FURUNO

CODE NO.	002-876-550
TYPE	CP66-00811

工事材料表
INSTALLATION MATERIALS

CI-35/35H カラー潮流観測装置 音波ログ
DOPPLER SONAR CURRENT INDICATOR
(分配器用)FOR DISTRIBUTOR

番号 No.	名称 NAME	略図 OUTLINE	型名／規格 DESCRIPTIONS	数量 Q'TY	用途／備考 REMARKS
1	圧着端子 CRIMP-ON LUG	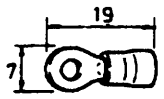	FV1.25-M4 アカ RED CODE NO. 000-536-715	15	
2	圧着端子 CRIMP-ON LUG	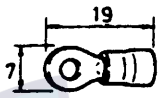	FV1.25-M3 アカ RED CODE NO. 000-538-110	80	
3	アース銅板 *鉄付* COPPER STRAP W/STEEL PLATE	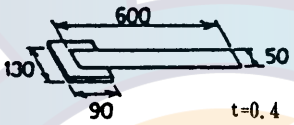	0.4X50X600MM CODE NO. 000-810-253	1	
			CODE NO.		
			CODE NO.		
			CODE NO.		
			CODE NO.		
			CODE NO.		
			CODE NO.		
			CODE NO.		

(略図の寸法は、参考値です。)
DIMENSIONS IN DRAWING FOR REFERENCE ONLY.

図番 DWG. NO. C7242-M07-B (1/1)

FURUNO ELECTRIC CO., LTD

FURUNO

CODE NO.	000-069-757
TYPE	FP66-00400

付属品表
ACCESSORIES

カラー潮流観測装置
CI-35/35H 音波ログ
DOPPLER SONAR CURRENT INDICATOR
(指示器用) FOR DISPLAY

番号 No.	名称 NAME	略図 OUTLINE	型名／規格 DESCRIPTIONS	数量 Q'TY	用途／備考 REMARKS
1	フィルタ袋詰品 FILTER	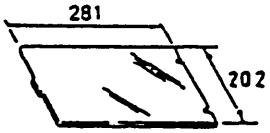	FP02-02510 CODE NO. 001-410-620	1	
2	フード組品 HOOD ASSEMBLY	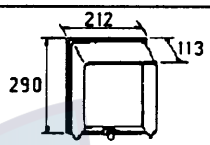	FP03-02910 03-034-1601-1 CODE NO. 008-223-520	1	
3	ビニールカバー(12インチ) PLASTIC COVER	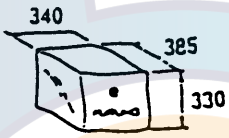	66-017-2111 CODE NO. 000-802-058	1	
			CODE NO.		
			CODE NO.		
			CODE NO.		
			CODE NO.		
			CODE NO.		
			CODE NO.		
			CODE NO.		

(略図の寸法は、参考値です。)
DIMENSIONS IN DRAWING FOR REFERENCE ONLY.

図番 (1/1)
DWG. NO. C7242-F01-B

FURUNO ELECTRIC CO., LTD

FURUNO

CODE NO.	000-069-755	
TYPE	SP66-00400	BOX NO. P

SHIP NO.	SPARE PARTS LIST FOR	U S E	SETS PER VESSEL
	カラー潮流観測装置 CI-35/35H 音波ログ DOPPLER SONAR CURRENT INDICATOR	(AC100V用) FOR 100VAC	

ITEM NO.	NAME OF PART	OUTLINE	DWG. NO. OR TYPE NO.	QUANTITY WORKING PER SET	QUANTITY WORKING PER VES.	QUANTITY SPARE	REMARKS/CODE NO.
1	ミゼットヒューズ FUSE	20, ϕ5	FGMB 0.5A AC125V	1		3	指示器用 FOR DISPLAY UNIT 000-114-994
2	管入りヒューズ GLASS TUBE FUSE	30, ϕ6	FGBO-A 5A AC125V	2		6	指示器用 FOR DISPLAY UNIT 000-549-064
3	管入りヒューズ GLASS TUBE FUSE	30, ϕ6	FGBO 7A AC125V	3		5	送受信演算部用 FOR TRANSCEIVER UNIT 000-549-013
4	管入りヒューズ GLASS TUBE FUSE	30, ϕ6	FGBO-A 1A AC125V	1		3	送受信演算部用 FOR TRANSCEIVER UNIT 000-549-061
5	管入りヒューズ GLASS TUBE FUSE	30, ϕ6	FGBO-A 3A AC125V	1		3	送受信演算部用 FOR TRANSCEIVER UNIT 000-549-063
6	管入りヒューズ GLASS TUBE FUSE	30, ϕ6	FGBO-A 5A AC125V	1		3	送受信演算部用 FOR TRANSCEIVER UNIT 000-549-064
7	管入りヒューズ GLASS TUBE FUSE	30, ϕ6	FGBO 10A AC125V	1		3	送受信演算部用 FOR TRANSCEIVER UNIT 000-549-065
8	管入りヒューズ GLASS TUBE FUSE	30, ϕ6	FGBO 15A AC125V	2		4	送受信演算部用 FOR TRANSCEIVER UNIT 000-549-014

MFR'S NAME	FURUNO ELECTRIC CO., LTD	DWG. NO.	C7242-P01-B	1/1

FURUNO

CODE NO.	000-069-756	
TYPE	SP66-00410	BOX NO. P

SHIP NO.	SPARE PARTS LIST FOR	U S E	SETS PER VESSEL
	カラー潮流観測装置 CI-35/35H 音波ログ DOPPLER SONAR CURRENT INDICATOR	(AC200V用) FOR 200VAC	

ITEM NO.	NAME OF PART	OUTLINE	DWG. NO. OR TYPE NO.	QUANTITY WORKING PER SET	QUANTITY WORKING PER VES.	QUANTITY SPARE	REMARKS/CODE NO.
1	ミゼットヒューズ FUSE	20, φ5	FGMB 0.5A AC125V	1		3	指示器用 FOR DISPLAY UNIT 000-114-994
2	管入りヒューズ GLASS TUBE FUSE	30, φ6	FGBO-A 5A AC125V	2		6	指示器用 FOR DISPLAY UNIT 000-549-064
3	管入りヒューズ GLASS TUBE FUSE	30, φ6	FGBO 7A AC125V	3		5	送受信演算部用 FOR TRANSCEIVER UNIT 000-549-013
4	管入りヒューズ GLASS TUBE FUSE	30, φ6	FGBO-A 1A AC125V	1		3	送受信演算部用 FOR TRANSCEIVER UNIT 000-549-061
5	管入りヒューズ GLASS TUBE FUSE	30, φ6	FGBO-A 3A AC125V	1		3	送受信演算部用 FOR TRANSCEIVER UNIT 000-549-063
6	管入りヒューズ GLASS TUBE FUSE	30, φ6	FGBO-A 5A AC125V	1		3	送受信演算部用 FOR TRANSCEIVER UNIT 000-549-064
7	管入りヒューズ GLASS TUBE FUSE	30, φ6	FGBO 10A AC125V	1		3	送受信演算部用 FOR TRANSCEIVER UNIT 000-549-065
8	管入りヒューズ GLASS TUBE FUSE	30, φ6	FGBO 10A AC250V	2		4	送受信演算部用 FOR TRANSCEIVER UNIT 000-549-067

MFR'S NAME	FURUNO ELECTRIC CO., LTD	DWG. NO.	C7242-P10-A	1/1

FURUNO

CODE NO.	002-876-520	
TYPE	SP66-00507	BOX NO. P

SHIP NO.	SPARE PARTS LIST FOR	USE	SETS PER VESSEL
	カラー潮流観測装置 CI-35/35H 音波ログ DOPPLER SONAR CURRENT INDICATOR	デジタル指示器(DS-351用) FOR DIGITAL INDICATOR(DS-351)	

ITEM NO.	NAME OF PART	OUTLINE	DWG. NO. OR TYPE NO.	QUANTITY WORKING PER SET	QUANTITY WORKING PER VES.	QUANTITY SPARE	REMARKS/CODE NO.
1	管入りヒューズ GLASS TUBE FUSE	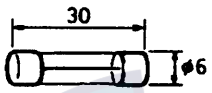	FGBO-A 1A AC125V	2		4	デジタル指示器用 FOR DIGITAL DISPLAY 000-549-061

MFR'S NAME	FURUNO ELECTRIC CO., LTD	DWG. NO.	C7242-P03-B	1/1

FURUNO

CODE NO.	002-876-500	
TYPE	SP66-00506	BOX NO. P

SHIP NO.	SPARE PARTS LIST FOR	U S E	SETS PER VESSEL
	カラー潮流観測装置 CI-35/35H 音波ログ DOPPLER SONAR CURRENT INDICATOR	ﾃﾞｼﾞﾀﾙ指示器(DS-350用) FOR DIGITAL INDICATOR(DS-350)	

ITEM NO.	NAME OF PART	OUTLINE	DWG. NO. OR TYPE NO.	QUANTITY WORKING PER SET	QUANTITY WORKING PER VES.	QUANTITY SPARE	REMARKS/CODE NO.
1	ランプ LAMP	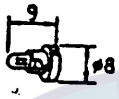	T3 C-2V 8V 50MA	6		6	デジタル指示器用 FOR DIGITAL DISPLAY 000-108-528
2	管入りヒューズ GLASS TUBE FUSE	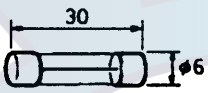	FGBO-A 2A AC125V	2		4	デジタル指示器用 FOR DIGITAL DISPLAY 000-549-062

MFR'S NAME	FURUNO ELECTRIC CO., LTD	DWG. NO.	C7242-P02-B	1/1

FURUNO

CODE NO.	002-876-570	
TYPE	SP66-00511	BOX NO. P

SHIP NO.	SPARE PARTS LIST FOR	USE	SETS PER VESSEL
	カラー潮流観測装置 CI-35/35H 音波ログ DOPPLER SONAR CURRENT INDICATOR	分配器(DS-370用) FOR DISTRIBUTION UNIT	

ITEM NO.	NAME OF PART	OUTLINE	DWG. NO. OR TYPE NO.	QUANTITY WORKING PER SET	QUANTITY WORKING PER VES.	QUANTITY SPARE	REMARKS/CODE NO.
1	管入りヒューズ GLASS TUBE FUSE	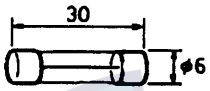	FGBO 1.5A AC125V	1		4	000-549-012
2	管入りヒューズ GLASS TUBE FUSE	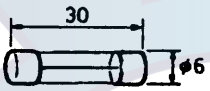	FGBO-A 1A AC125V	1		3	000-549-061
3	管入りヒューズ GLASS TUBE FUSE	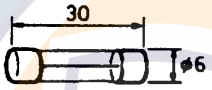	FGBO-A 2A AC125V	1		3	000-549-062
4	管入りヒューズ GLASS TUBE FUSE	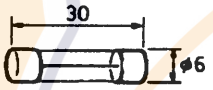	FGBO-A 3A AC125V	4		7	000-549-063
5	管入りヒューズ GLASS TUBE FUSE	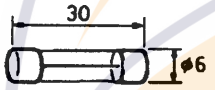	FGBO-A 5A AC125V	1		4	000-549-064

MFR'S NAME	FURUNO ELECTRIC CO., LTD	DWG. NO.	C7242-P04-B	1/1

CHAPTER 1 GENERAL DESCRIPTION

The Doppler Sonar Current Indicator CI-35/35H consists of a Display Unit, a Transceiver Unit, a Junction Box and a Hull (Transducer) Unit. To obtain absolute tide even in deep waters, the CI-35/35H must be supplied with the speed/course data (or position data) from a navigation equipment (GPS), and the heading data from a gyrocompass (via an A-D converter). The equipment can output ship's speed and true bearing data to a radar or scanning sonar for true-motion display. Further, current data can be output to an echo sounder or scanning sonar in CIF format.

To obtain full performance from the equipment, the installation of the units, especially the hull unit, is very important. Poor siting of units or poor cable layout may cause pick-up of noise, or give interference to other units. This chapter presents an overview of how to install the equipment.

1.1 Selection of Installation Site

Hull (Transducer) Unit

The performance of the equipment largely depends on the installation of the transducer unit, and a very important consideration is the installation site. They should meet the following requirements.

a) No projections (such as sonar's retraction tank) should exist in the hatched area shown in Fig. 1-1. However, when the transducer unit projects below the lowest part of the keel, the effects when the sonar transducer is lowered must be taken into account.

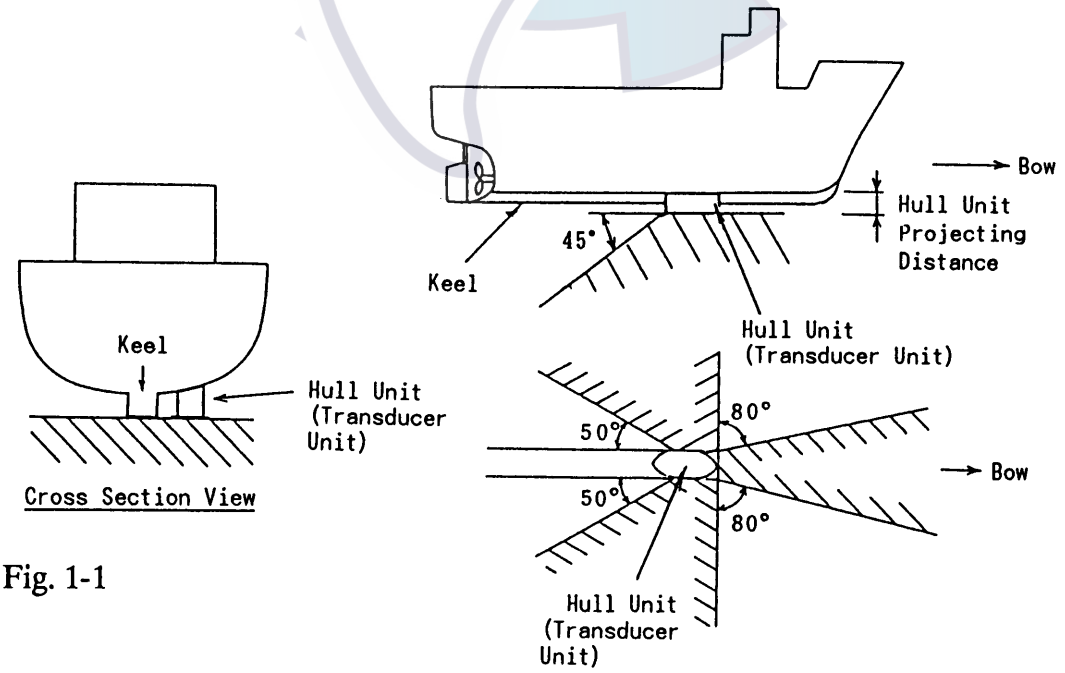

Fig. 1-1

b) Mount the transducer between one-third and one-half of the ship's full length (measuring from the bow). Select the place where the transducer is free from the effects of air bubbles. The transducer face should not be above the sea surface when the ship is pitching or rolling.

c) In general, the air bubbles produced at the bow flow backward alongside the keel. Therefore, separate the transducer by more than 1000 mm from the keel, or flush mount the transducer inside the keel. (See notes below.)

d) The surface of the transducer should project by 250 mm or more from the hull bottom. For better performance, its surface should be even with the keel's lowest point or below it.

e) The following is important for preventing interference between the CI-35/35H and other equipment(s).
If the transducer of an echo sounder or scanning sonar whose harmonic is within the frequency range of 122kHz to 138kHz (130 ± 8kHz) is mounted, interference may occur. Even if the harmonic is out of the range, the risk of interference still exists if the transducer of the CI-35/35H and other equipment(s) are mounted near one another. For this reason, separate the transducer of the CI-35/35H as far as practical from other equipments which have high output power. If interference is unavoidable due to limited mounting space, connect the interfering equipment to the built-in interference rejector circuit (two inputs) in the transceiver unit. For connection to this circuit, you will need to run a two-core cable between it and the interfering equipment(s).

f) Make the transducer cable as short as possible. The cable is generally installed in grounded steel conduit run between the transducer and the junction box, to prevent pick-up of noise. The transducer with 20 m transducer cable can be used only when it is passed inside conduit.

Note 1: For flush mounting, provision must be made to allow water to flow inside the transducer to keep it cool.

Note 2: Before installing the hull (transducer) unit, discussion should take place and agreement be reached with the shipyard for sufficient reinforcement and watertightness of the hull and keel to comply with the regulations concerned.

Other Units

When selecting a mounting location for the other units (except transducer) of the CI-35/35H system, keep the following in mind:

a) Keep the units out of direct sunlight.

b) Keep the units away from air conditioners and heaters.

c) Avoid areas subjected to rain or water splash.

d) Select a well-ventilated area.

e) Avoid wet and dusty areas.

f) Select a place where vibration is minimum.

1.2 Grounding

This equipment uses pulse signals which may cause interference to other electronic equipments such as direction finder and radio receiver, if it is not grounded properly. It is strongly recommended to ground all cables referring to the guidelines below.

a) Separate all units as far as possible from radio equipment.

b) Do not run interconnection cables close to or near radio equipment or its cables.

c) Run the cables in the shortest path practical.

d) Lay the cables on grounded copper plate and fix them every 30 cm with metal cable clamps.

e) Ground all units with a copper strap as shown in Figs. 1-2 and 1-3.

f) To join copper straps, use solder cream for perfect contact.

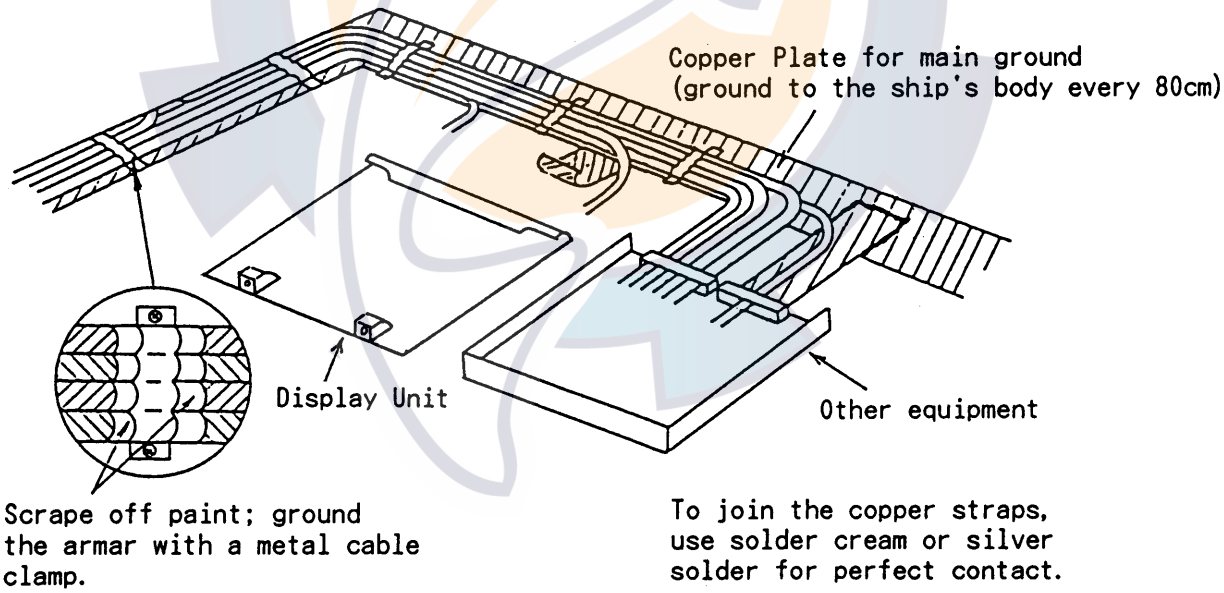

Fig. 1-2 Example of Grounding [1]

Location of earth terminal on each unit and grounding method

- Display Unit (Rear)

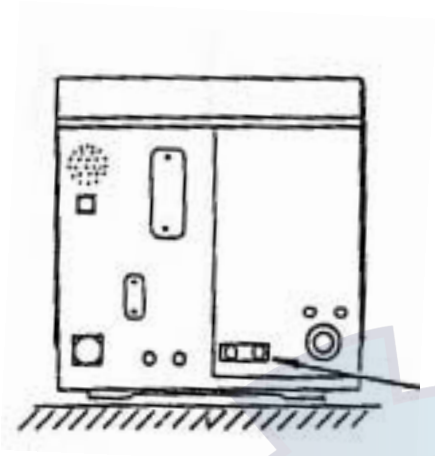

⚠ CAUTION

Ground the equipment.

Ungrounded equipment can give off or receive electro-magnetic interference or cause electrical shock.

- Transceiver Unit (Bottom)

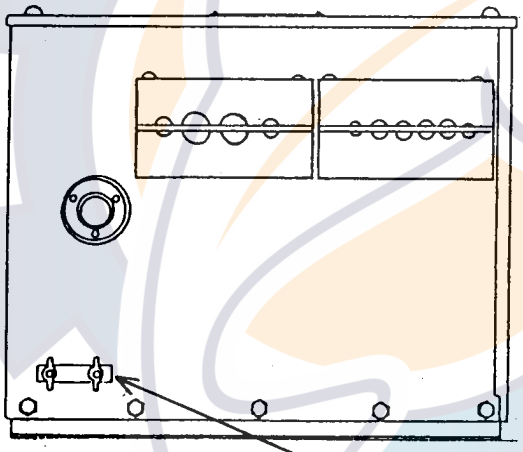

- Junction Box (CI-35H)/Matching Box (CI-35), Bottom

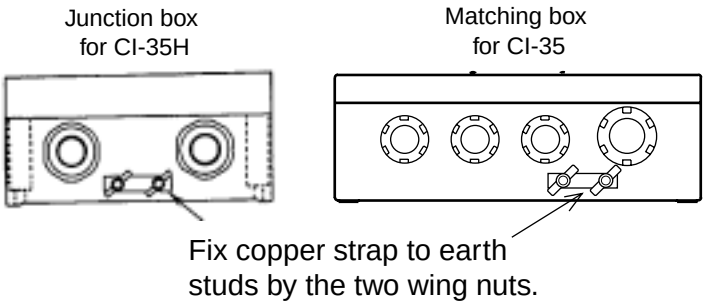

Fig. 1-3 Examples of Grounding [2]

1.3 Alteration of Power Supply Voltage

1ø, 50/60 Hz AC power is supplied to the transceiver unit. The transformer tap is set at the factory according to customer's order. If necessary, change jumper wires at TB5 of the Transceiver Unit according to the input voltage.

⚠ CAUTION

Confirm that the power supply voltage is compatible with the voltage rating of the equipment.

Connection to the wrong power supply can cause fire or equipment damage. The voltage rating appears on the label at the rear of the equipment.

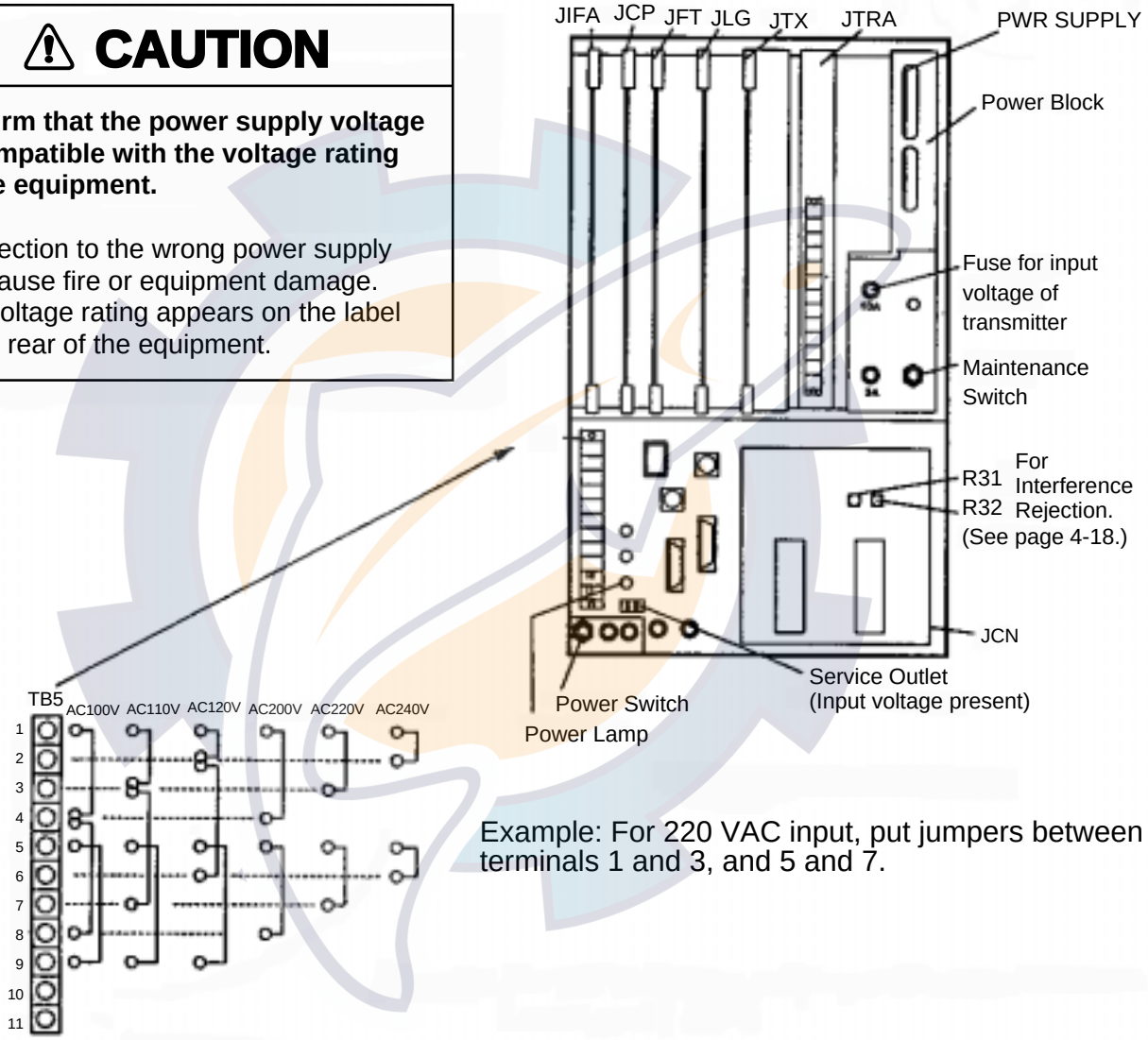

Example: For 220 VAC input, put jumpers between terminals 1 and 3, and 5 and 7.

Note: Confirm that the jumper settings in the transceiver unit are set according to ship's mains before turning power on.

Fig. 1-4 Jumper Connections for Mains Voltages

CHAPTER 2 MOUNTING

2.1 Display Unit

Mounting Considerations

The display unit is designed for tabletop mounting. It can be installed almost anywhere, provided the following conditions are met.

1) Select a place where controls can be easily operated while observing fishing ground or the area around the vessel.

2) Locate the unit at least 1 m from magnetic devices (radar magnetron, loudspeaker, high power transformer, etc.) and magnetic compass.

3) Keep the unit out of direct sunlight, water splashes and hot air.

4) Secure enough space around the unit for maintenance, checking and ventilation, referring to the outline drawings.

5) Select a place where the CRT face is within ±45° from vertical.

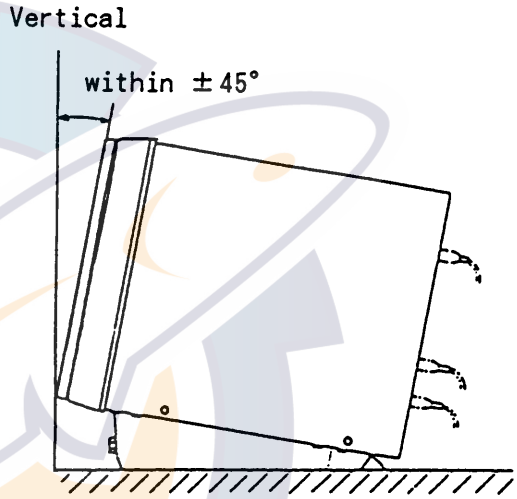

Fig. 2-1

Procedure

1. Remove the mounting base from the display unit by loosening the two bolts at the front of the display unit.

2. Fix the mounting base to the chosen location with four woodscrews (ø10 × 25) or four bolts (M10).

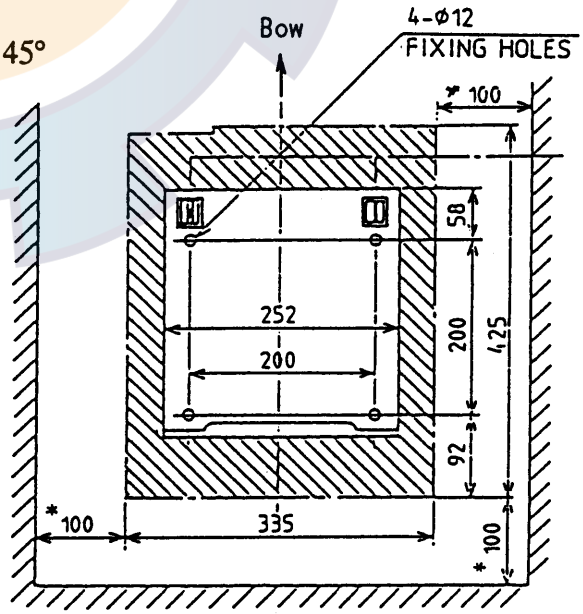

Fig. 2-2 Display Unit Mounting Dimensions

3. Fix the display unit to the mounting base with the two bolts removed in step 1.

2.2 Transceiver Unit

Mounting Considerations

1) Since the transceiver unit generates heat, install it in a dry, well-ventilated place. The cooling fans at the top of the unit must not be obstructed, to allow heat to escape.

2) This unit is designed for bulkhead mounting to permit dissipation of heat. If bulkhead mounting is absolutely impossible, mount the unit on the floor leaving at least 50 mm clearance between it and the floor to permit dissipation of heat.

3) The unit weighs 32 kg. Reinforce the mounting area, if necessary.

4) Leave space around the unit for maintenance and checking. Refer to the drawing on page D-2.

Procedure

1. Fix 4 bolts (M10) to the bulkhead so their ends are exposed by about 20 mm. Attach a nut to each bolt to provide clearance between the rear panel of the unit and the bulkhead to prevent warpage of the rear panel. If it warps, it may be impossible to remove the power block in the transceiver unit.

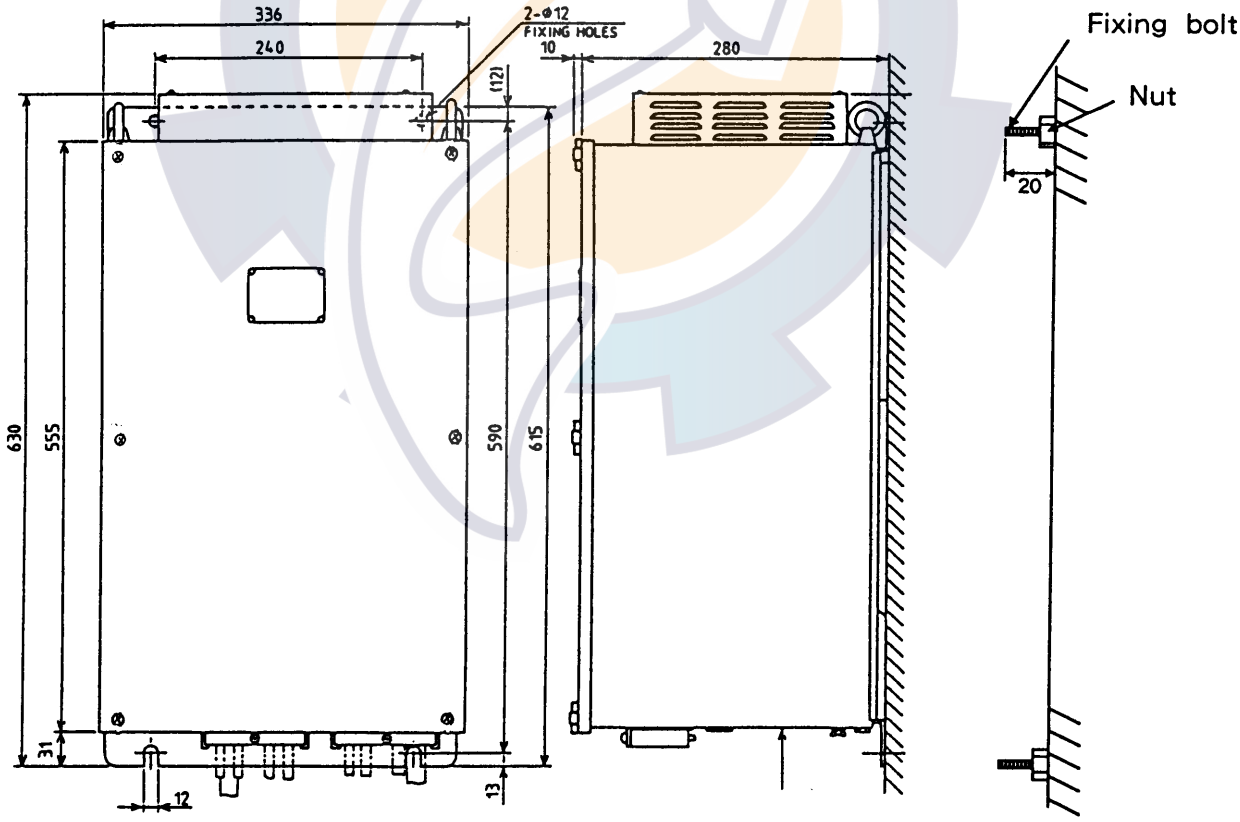

Fig. 2-3 Transceiver Unit Mounting Dimensions (Vertical Mounting)

2. Place the transceiver unit on the bulkhead and fix it with nuts.

2.3 Matching Box/Junction Box

Mounting Considerations

The matching box/junction box forms a joint between the hull unit and the transceiver unit.
Use the matching box for CI-35, junction box for CI-35H.
Install it referring to the guidelines below.

1) Keep the box away from noise emitting electrical machinery, i.e., electric generator, radio transmitter, TV, etc.

2) Do not install it in places of high humidity.

3) Avoid installing the box where temperature varies greatly, since moisture may penetrate the box.

4) The box is generally installed above the draft line of the ship and the transducer cable is run inside steel conduit. This permits replacement of the transducer without dry docking. Even if the junction box is installed below the draft line, the conduit is necessary to minimize picking up of noise. If use of conduit is not possible, install the box as near to the transducer as possible.

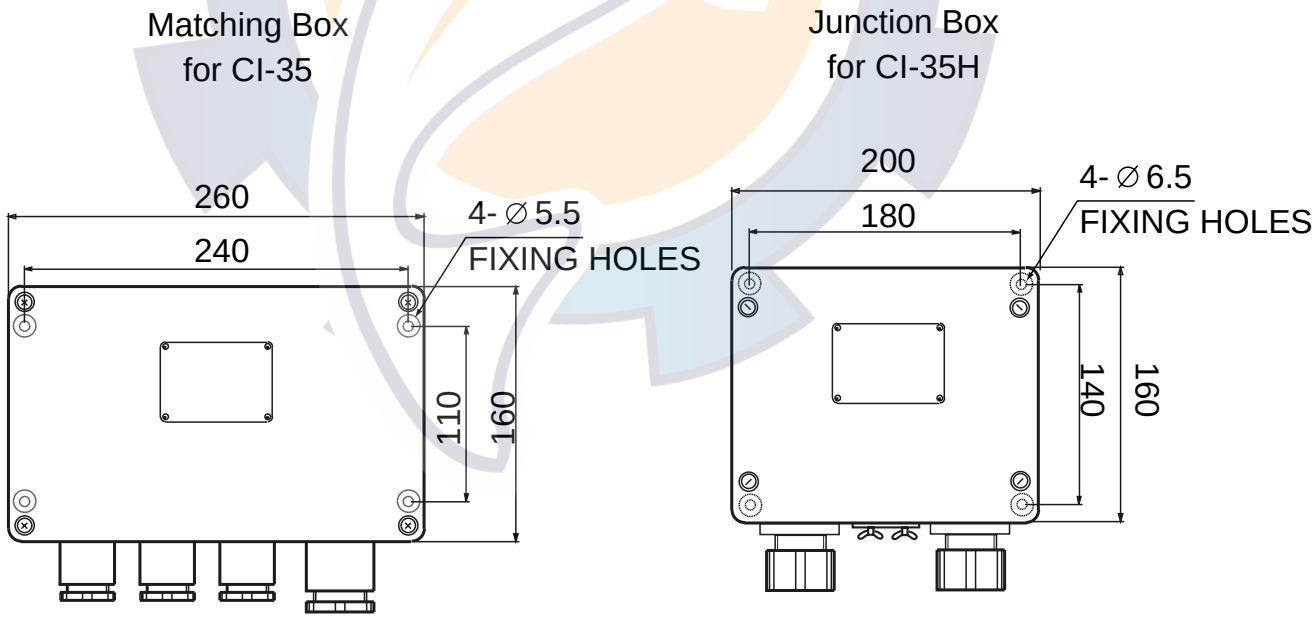

Fig.2-4 Matching Box/Junction Box Mounting Dimensions

Procedure

Fix the box to a bulkhead, referring to Fig.2-4.

2.4 Hull (Transducer) Unit for CI-35H

Steel Hull Vessels (See page D-4)

1. Select a mounting place on the hull bottom, referring to chapter 1. (Since the transducer cable is comparatively thick, select a mounting place for the thru-hull pipe where the cable can be easily led into the cable gland.).

2. If necessary, weld a doubling plate (shipyard supply) to the hull bottom.

3. Unpack the transducer casing and determine the projecting length, making it 350 mm or cut it considering the rising angle of the ship's hull.
   Weld the casing in parallel with ship's fore-aft line with an accuracy of better than ±1°.
   The transducer face should be horizontal at cruising speed.

4. Make a hole for the thru-hull pipe in the hull bottom. Before welding the thru-hull pipe, remove the rubber packing from the thru-hull pipe. Weld the thru-hull pipe. Replace the rubber packing.

5. Make a hole of 10 to 20 mm diameter on the stern side of the casing to allow water to penetrate the transducer casing.

6. Weld the casing to the hull bottom. Do not remove the transducer fixing flange to prevent the casing from being deformed.

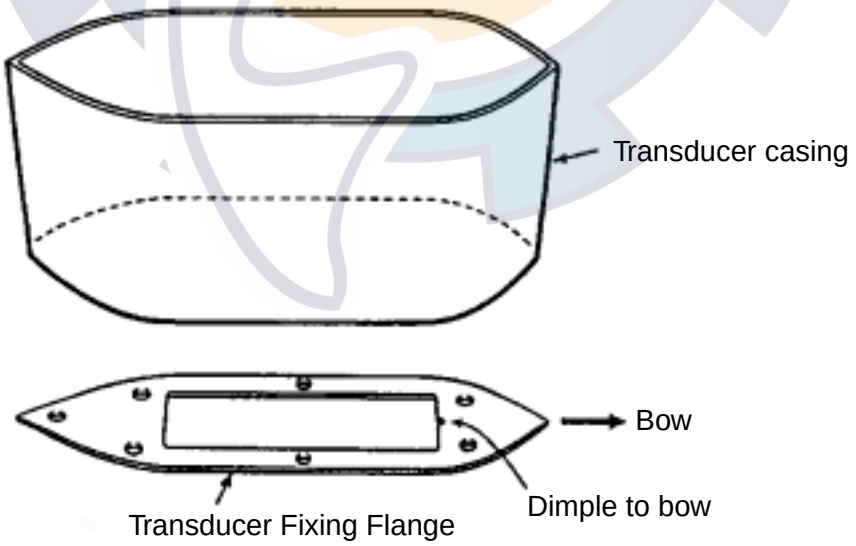

Fig.2-5 Fixing Transducer Casing

7. Dismount the fixing flange from the casing. Fix the transducer to the fixing flange.

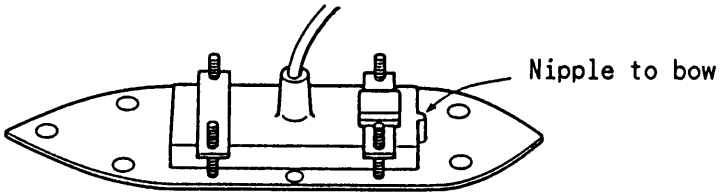

Fig. 2-6

8. Pass the transducer cable through the thru-hull pipe. Tighten the cable gland, leaving a cable slack of 0.5 to 1 m below the cable gland.

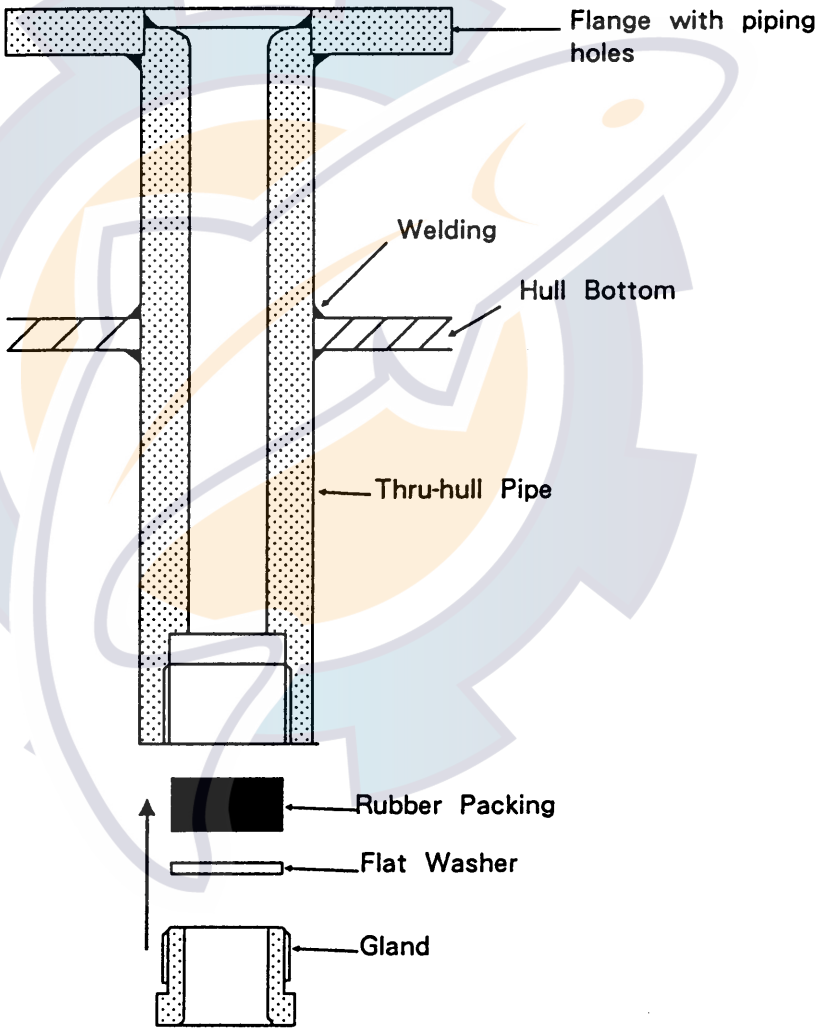

Fig. 2-7 Thru-hull Pipe for Steel Hull

9. Mount the fixing flange with the transducer onto the casing. Take care not to pinch the transducer cable. Never hold the transducer by the cable. Shock will most assuredly damage the transducer.

FRP Hull Vessels (See page D-5)

1. Select a mounting place on the hull bottom, referring to chapter 1. (Since the transducer cable is comparatively thick, select a mounting place for the thru-hull pipe where the cable can be easily led into the cable gland.)

2. Determine the projecting length of the casing, making it at least 250 mm. Cut the casing, considering the rising angle of the ship's hull, so that the transducer face is horizontal. The casing should be parallel with ship's fore-aft line within ±1°, and the transducer face should be horizontal at cruising speed.

3. Make a hole of 10 to 20 mm in diameter on the stern side of the casing to allow water to penetrate the transducer casing.

4. Make a hole for the thru-hull pipe on the hull bottom. Allow enough clearance around the pipe for easy tightening of lock nuts.

5. Fix the thru-hull pipe on the hull plate with double nuts and then apply FRP glue around the pipe.

6. Before fixing the casing to the hull bottom, clean the hull plate surface with an electric sander until fiberglass appears, then remove dusts, oils, etc. from surface. Reinforce both sides of the casing with FRP molding.

7. Fix the transducer to the fixing flange.

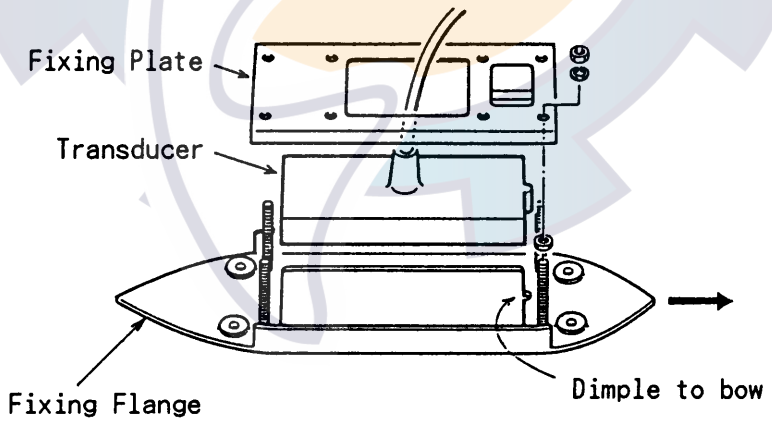

Fig. 2-8

8. Pass the transducer cable through the thru-hull pipe. Tighten the cable gland, leaving a cable slack of 0.5 to 1 m below the cable gland.

<u>To tighten the cable gland;</u>

a) Tighten the gland securely.
b) Tighten the double nut securely.

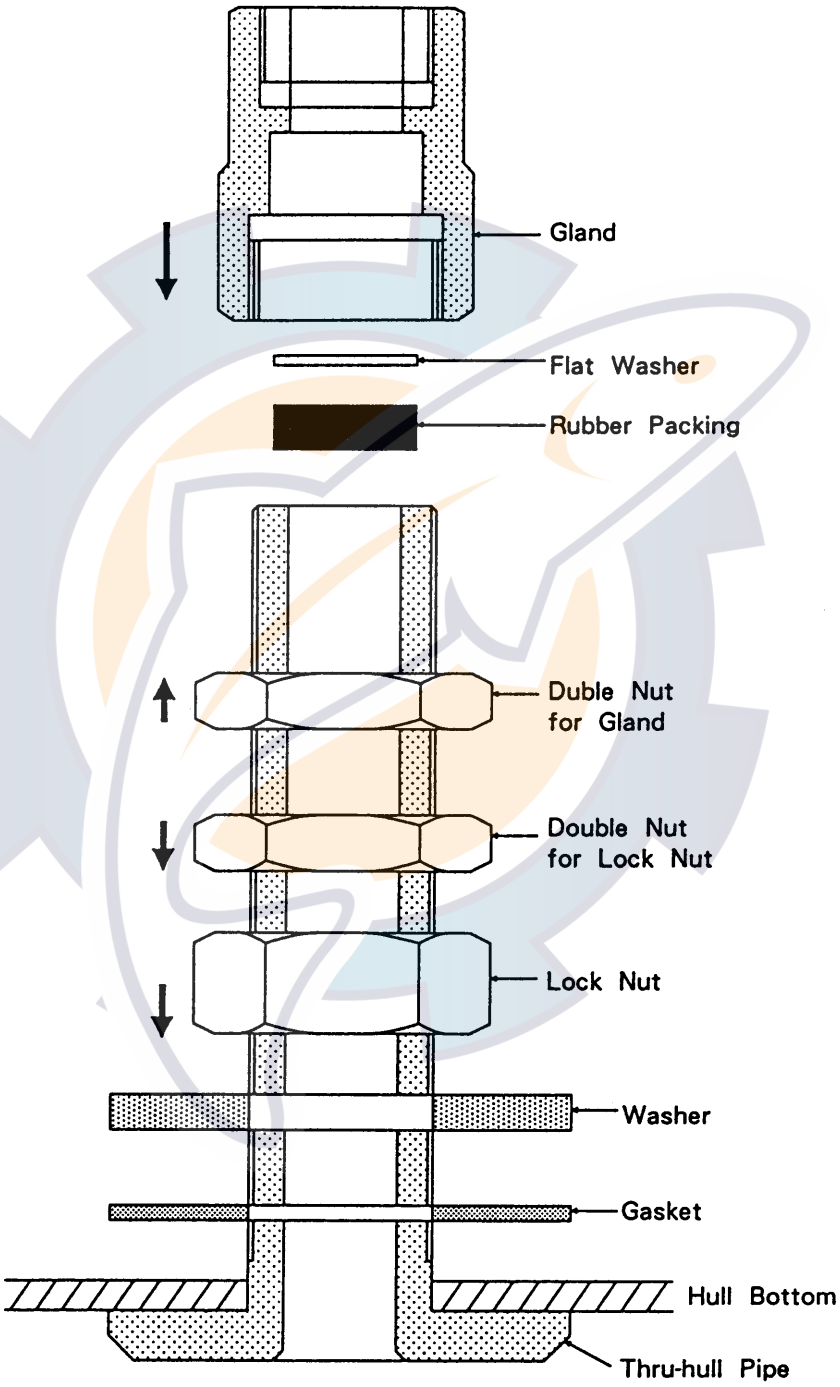

Fig. 2-9

9. Fix the fixing flange with the transducer to the casing. Take care not to pinch the transducer cable.

2.5 DC-AC Inverter

If the ships mains is 24 VDC or 32 VDC a DC-AC inverter is required. Two models are available; TR-2450, 24/32 VDC, and CSH-5050, 32 VDC. For the CSH-5050, change the tap connection for 32 VDC. For further information, see the instruction sheet attached to the CSH-5050. Never share the output of the DC-AC Inverter with other equipment(s).

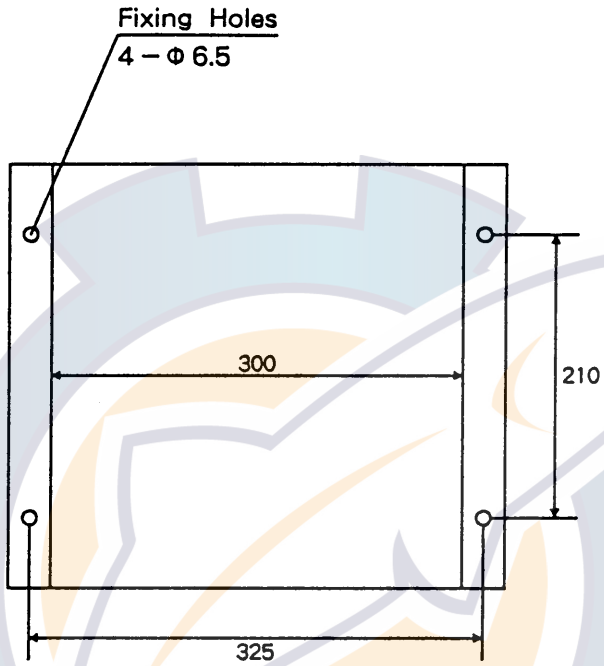

Fig. 2-10 TR-2450 Mounting Dimensions

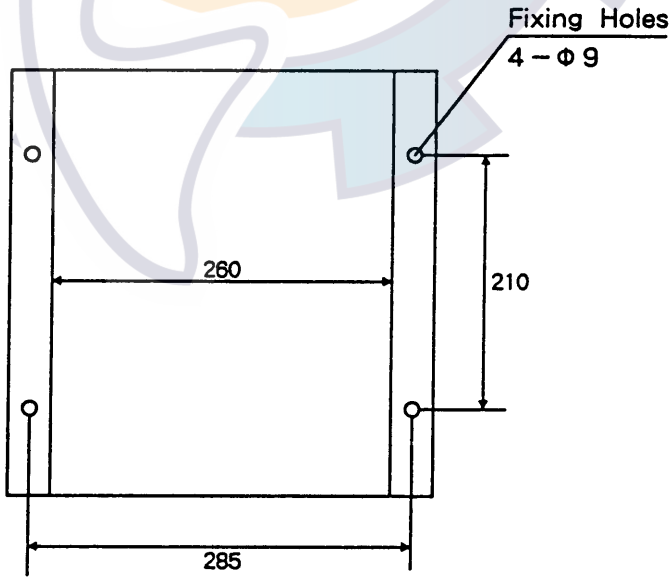

Fig. 2-11 CSH-5050 Mounting Dimensions

2.6 Hull (Transducer) Unit for CI-35

Mounting Considerations

Select a mounting place on the bottom, referring to chapter 1.

1. If necessary, weld a doubling plate (shipyard supply).

2. Unpack the transducer casing and determine the projecting length, making it 350 mm or more. Before cutting the casing, confirm that the transducer casing has "direction". Then, cut it considering the rising angle of the ship's hull.

3. Make a hole for the thru-hull pipe in the hull bottom. Before welding the thru-hull pipe, remove the rubber gasket from the thru-hull pipe. Weld the thru-hull pipe. Replace the rubber gasket.

4. Spot-weld the joint of the casing, and then weld the casing to the hull bottom. To prevent the casing from being deformed, note the following points.
   a) Do not remove the transducer fixing flange and fixing plate.
   b) Weld the casing to the hull bottom symmetry and equidistantly.

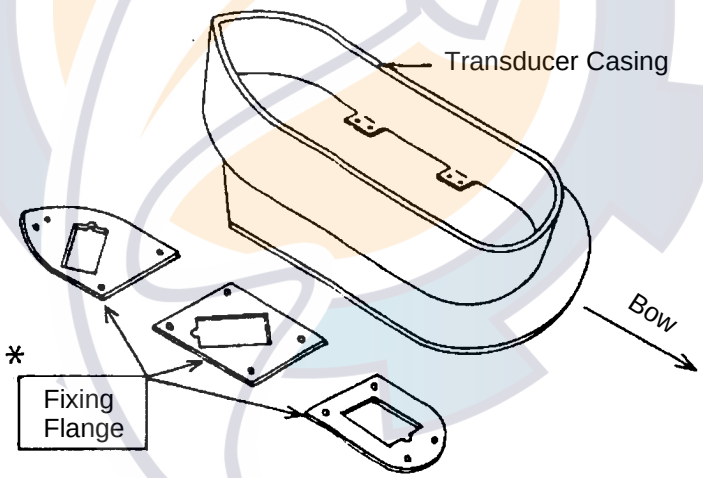

Fig.2-12 Fixing Transducer Casing

Note: Weld the casing in parallel with ship's fore-aft line with an accuracy of better than ± 1°.

5. Unpack the transducer in the ship's bottom.
6. Dismount the fixing flanges from the casings, and then fix the transducers to flanges appropriately.

   Referring to the stickers on the vinyl packing of transducer or beam No. on transducer cable, mount the transducers as below.

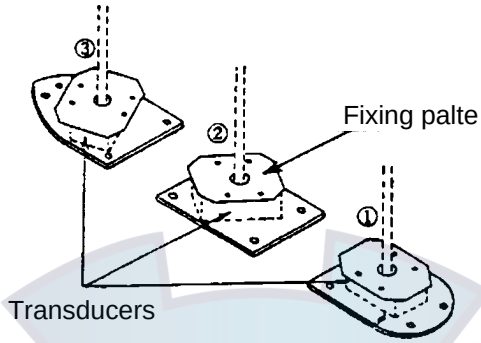

Fig.2-13 Mounting transducers on flanges

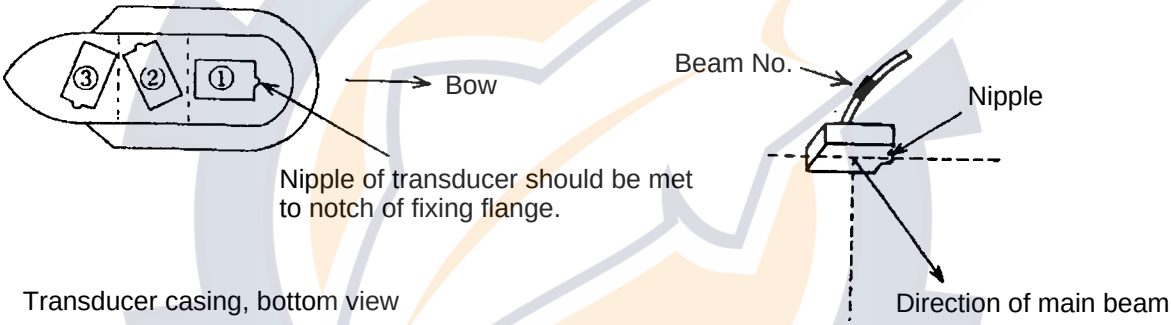

Fig. 2-14 Transducer casing, bottom view and beam direction

7. Pass the transducer cable through the thru-hull pipe. Tighten the cable gland, leaving a cable slack of 0.5 to 1 m below the cable gland.
8. Mount fixing flange with the transducer onto the casing. Take care not to pinch the transducer cable. Never hold the transducer by the cable. Shock will most assuredly damage the transducer.

CHAPTER 3 CONNECTIONS

3.1 Cabling

Connect cables referring to the figure below.

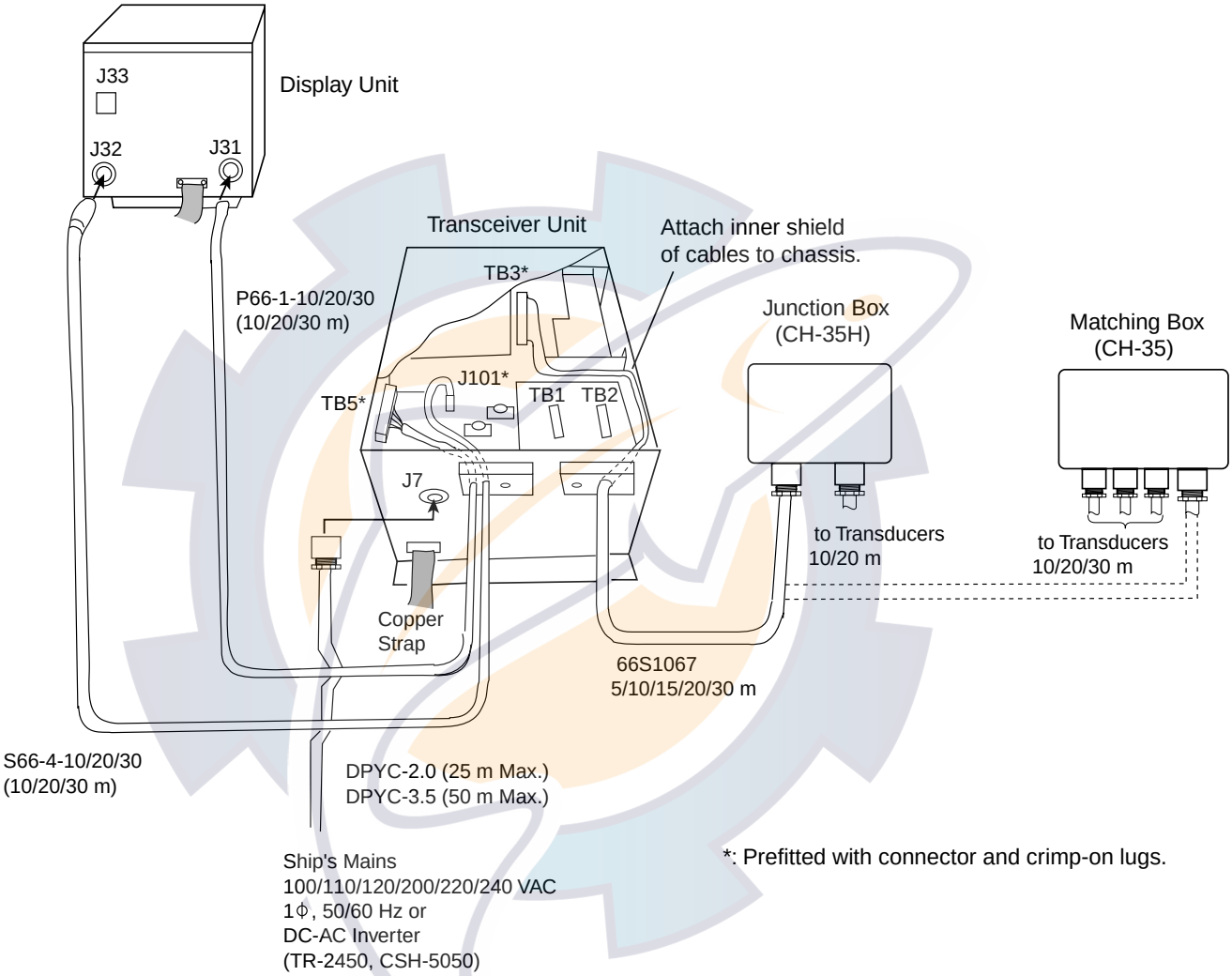

Fig. 3-1 Cabling for basic system

3.2 Display Unit

Two cables run from the transceiver unit: a power cable and a signal cable. Fit a connector to each as shown below.

1) Power cable P66-1-10/20/30 (DPYCY-1.25)

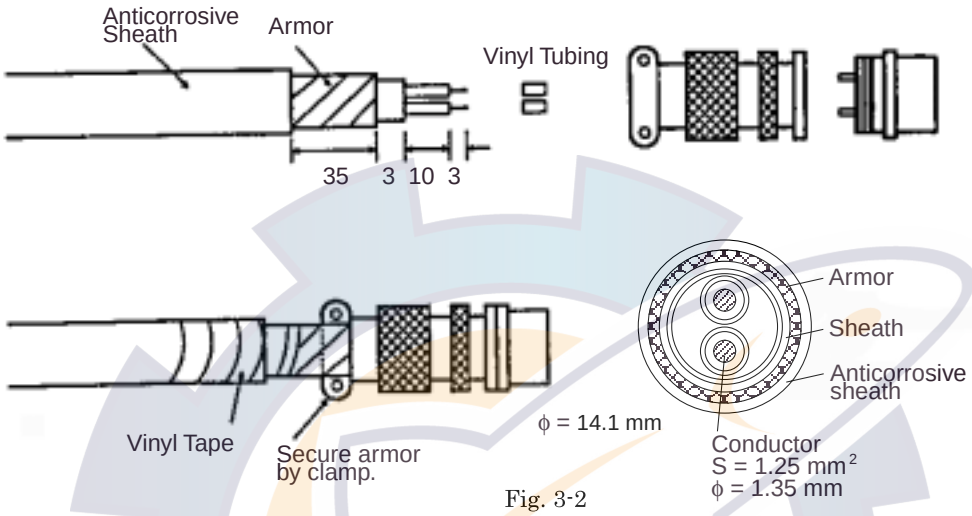

Fig. 3-2

2) Signal cable S66-4-10/20/30 (CO-SPEVV-SB-C 0.2 sq x 10P)

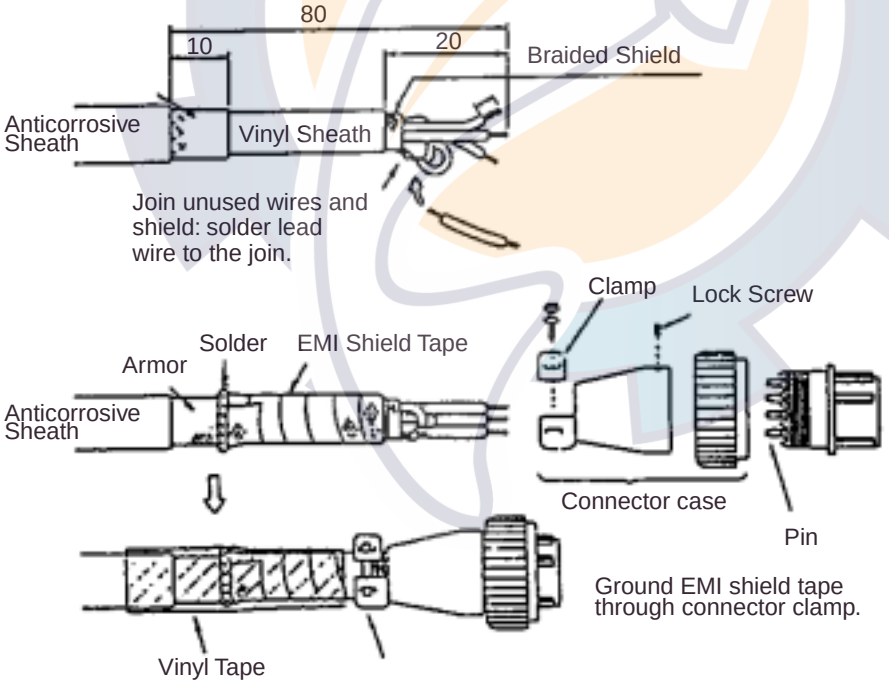

	Color	Connector Pin
P	Green White	1 2
P	Red White	3 4
P	Blue Gray	5 6
P	Green Black	7 8
P	Red Black	9 10
P	Yellow Black	11 12
P	Blue Black	13 14
P	Unused Wires & Shield	16

P: Twisted Pair

Fig. 3-3

3.3 Transceiver Unit

A power cable and a 4 pair cable (transducer line) run between the transceiver unit and the display unit. They are outfitted with a connector and crimp-on lugs; but you need to ground the armor and fabricate the other end of the cable for connection to the junction box.

1) Power cable DPYC-2.0 (max. 25 m) or DPYC-3.5 (max. 50 m)
(DPYC-xx is the Japan Industrial Standard cable. Refer to page 3-12.)

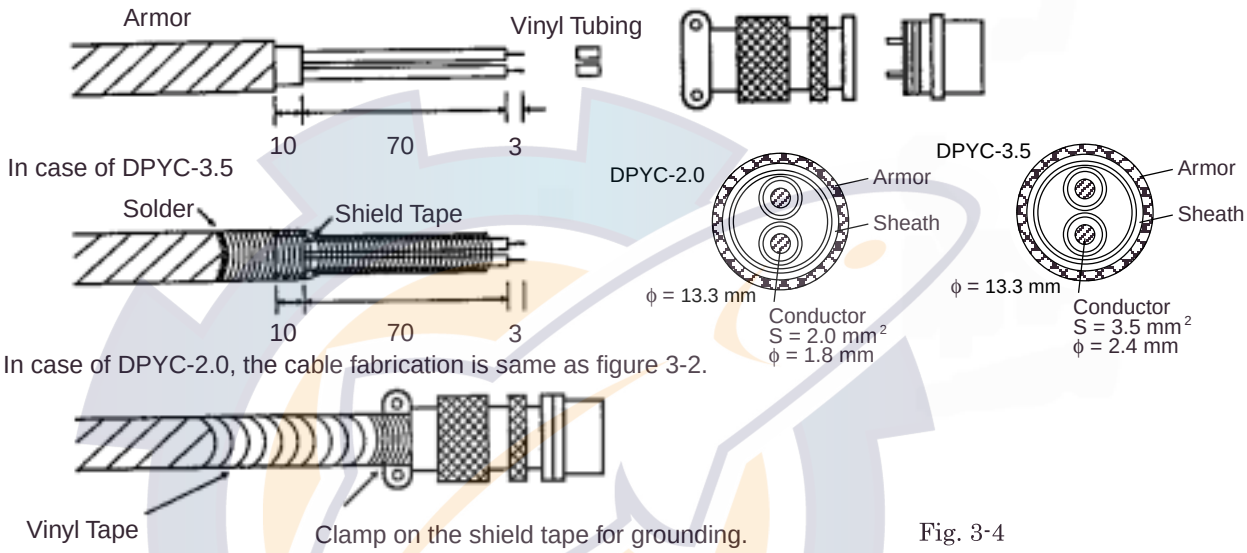

Fig. 3-4

2) 4 pair cable (66S1067, transducer line)

CAUTION

Carefully connect the wires to respective terminals, referring to the illustrations (next page) and the interconnection diagram (page S-1). Wrong coonection can damage the transducer, thermal sensor and the JTX board.

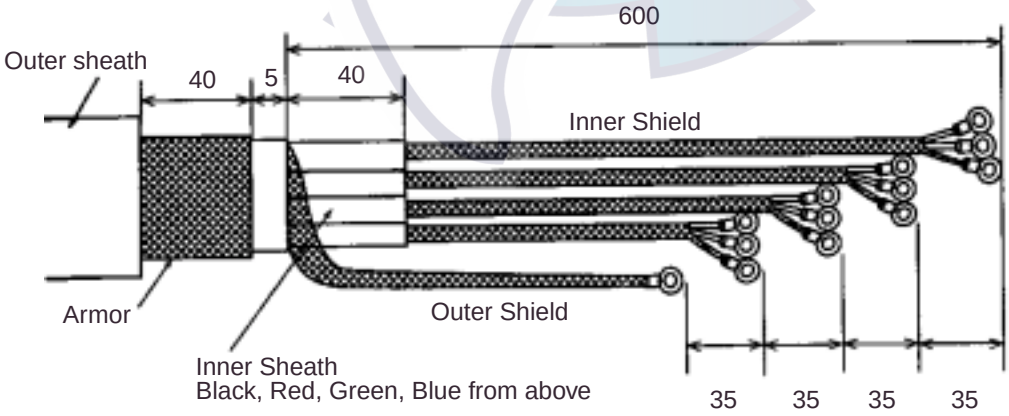

Fig. 3-5

Cabling of 66S1067 inside of the unit

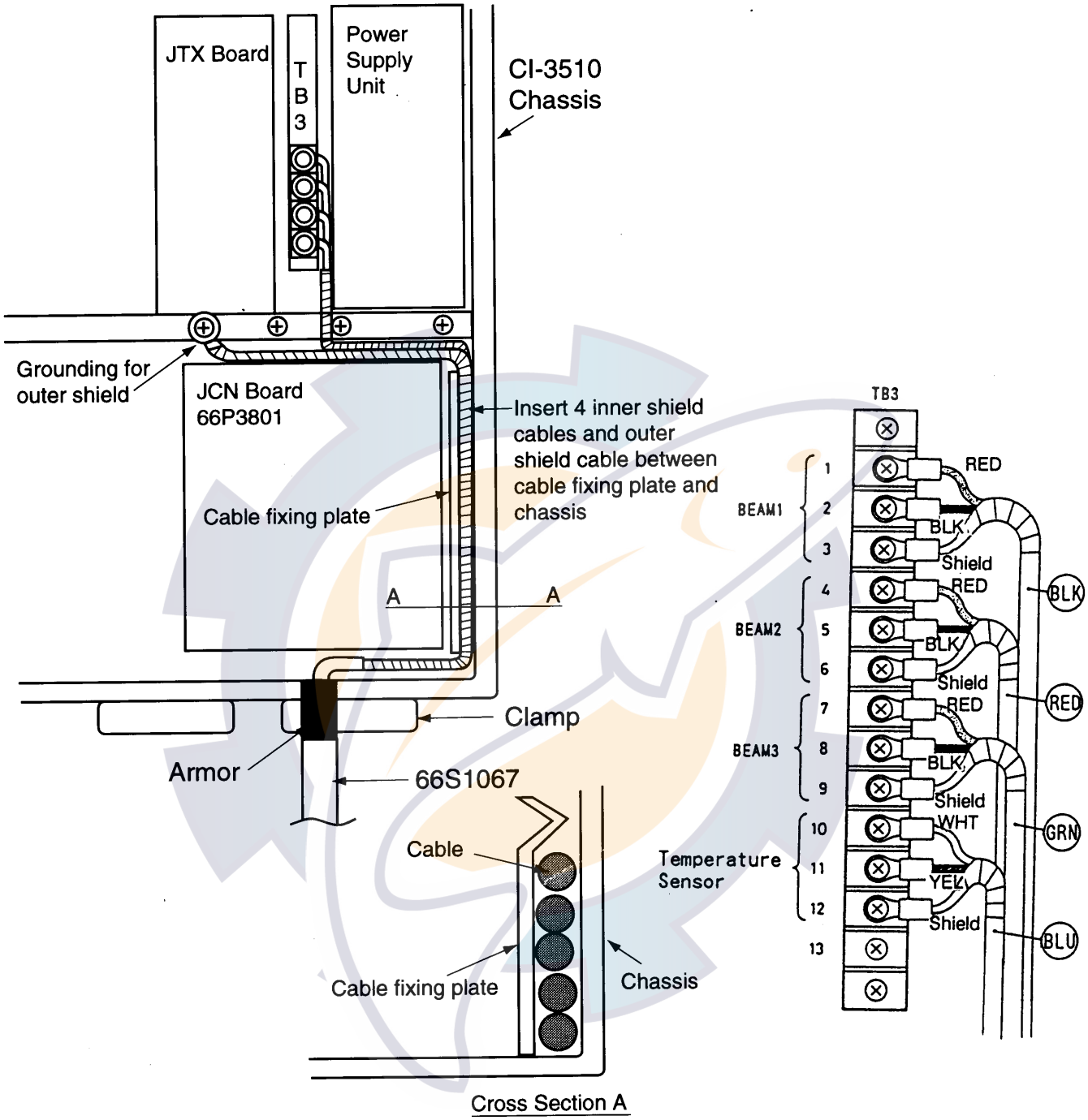

Fig. 3-6

3) Two cables run between the display unit and the transceiver unit.

The transceiver unit "end" of the cables is fitted with a connector and crimp-on lugs; however, you will need to fabricate the armor. See the previous section to fabricate the armor.

3.4 Junction Box

The transducer cable is connected to the junction box with an extension cable. After making the connection, seal the cable gland with putty for watertightness.

1) Transducer cable 66S1066 (without armor)

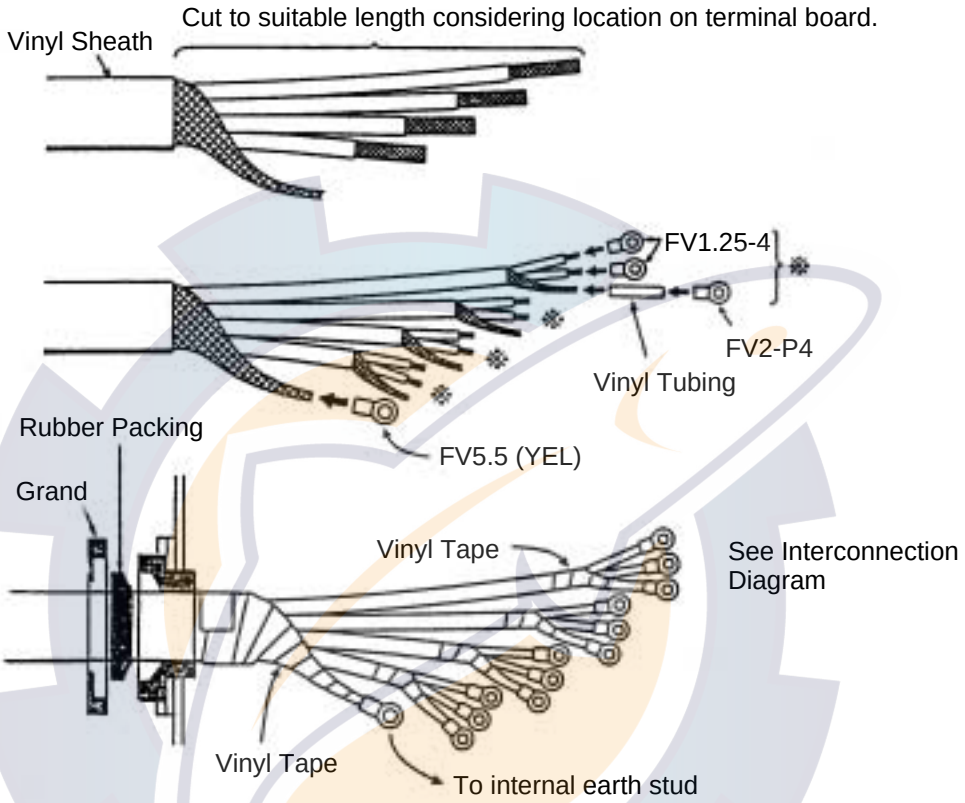

Fig. 3-7

2) 4 pair cable 66S1067 (extension cable, with armor)
Attach crimp-on lugs in the same manner as shown above. Fabricate the armor as follows.

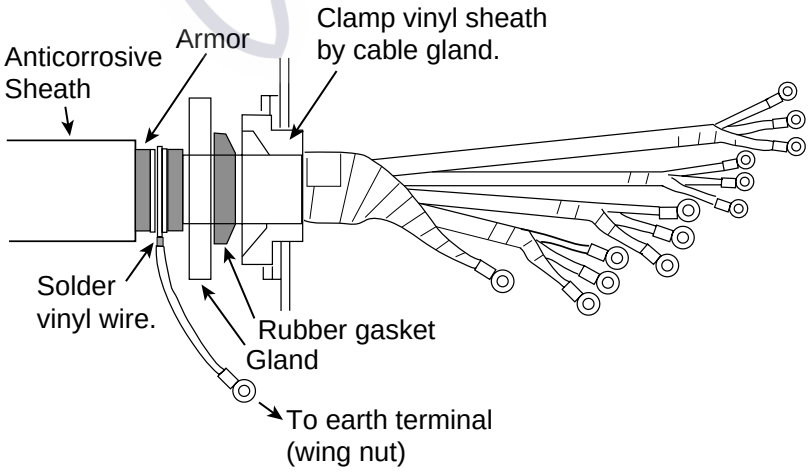

Fig. 3-8

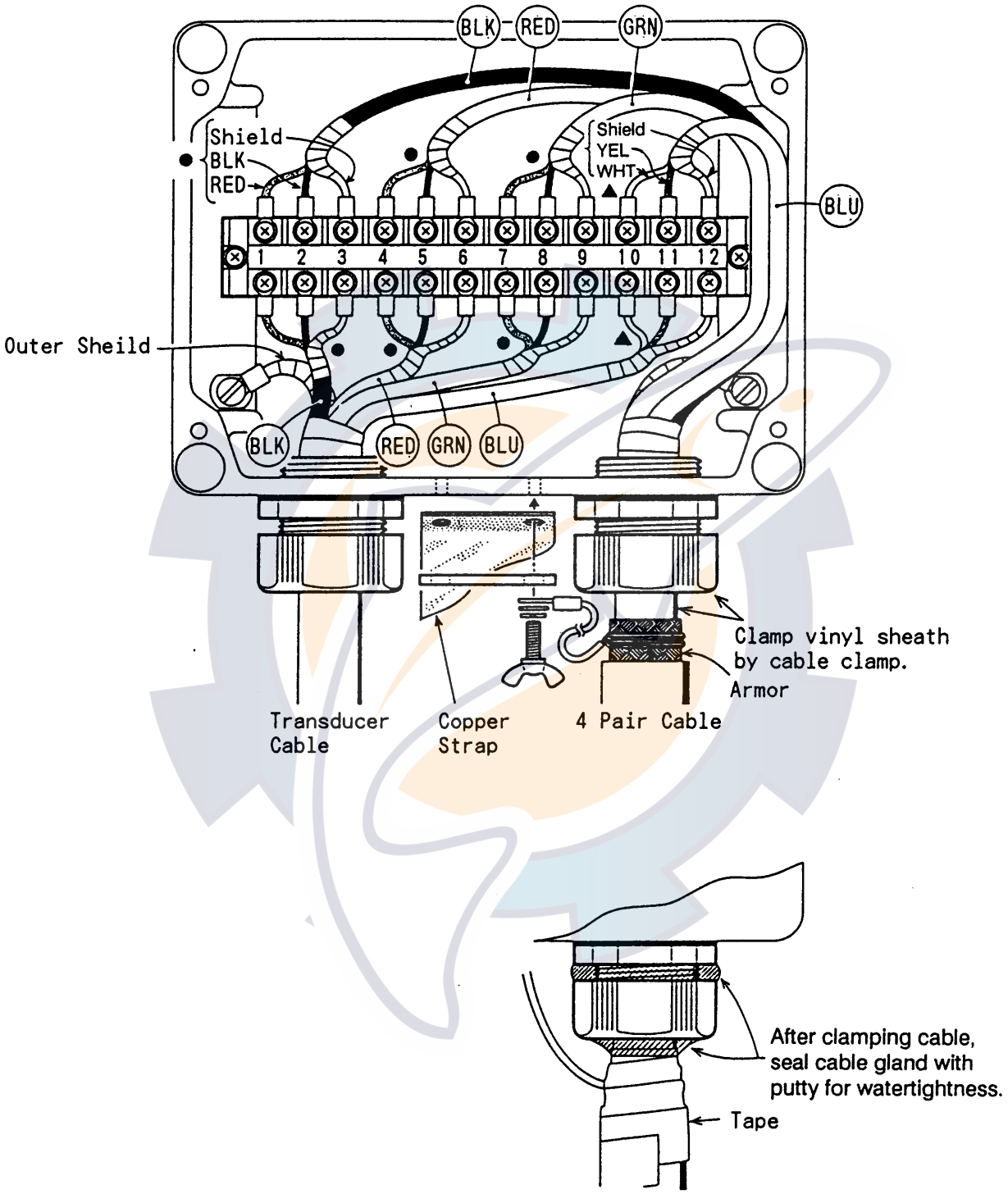

Fig. 3-9 Junction Box Inside View

3.5 External Equipment

3.5.1. Connection of external equipment to the display unit

A trumpet speaker and/or buzzer can be connected to the display unit for an external alarm. The trumpet speaker (4 Ω, max output level 800mW) is connected directly to pins A and B of connector J33. Contact closure signal for alarm is output from pins C and D of J33. Speaker volume is adjustable by R28 on the ICP board.

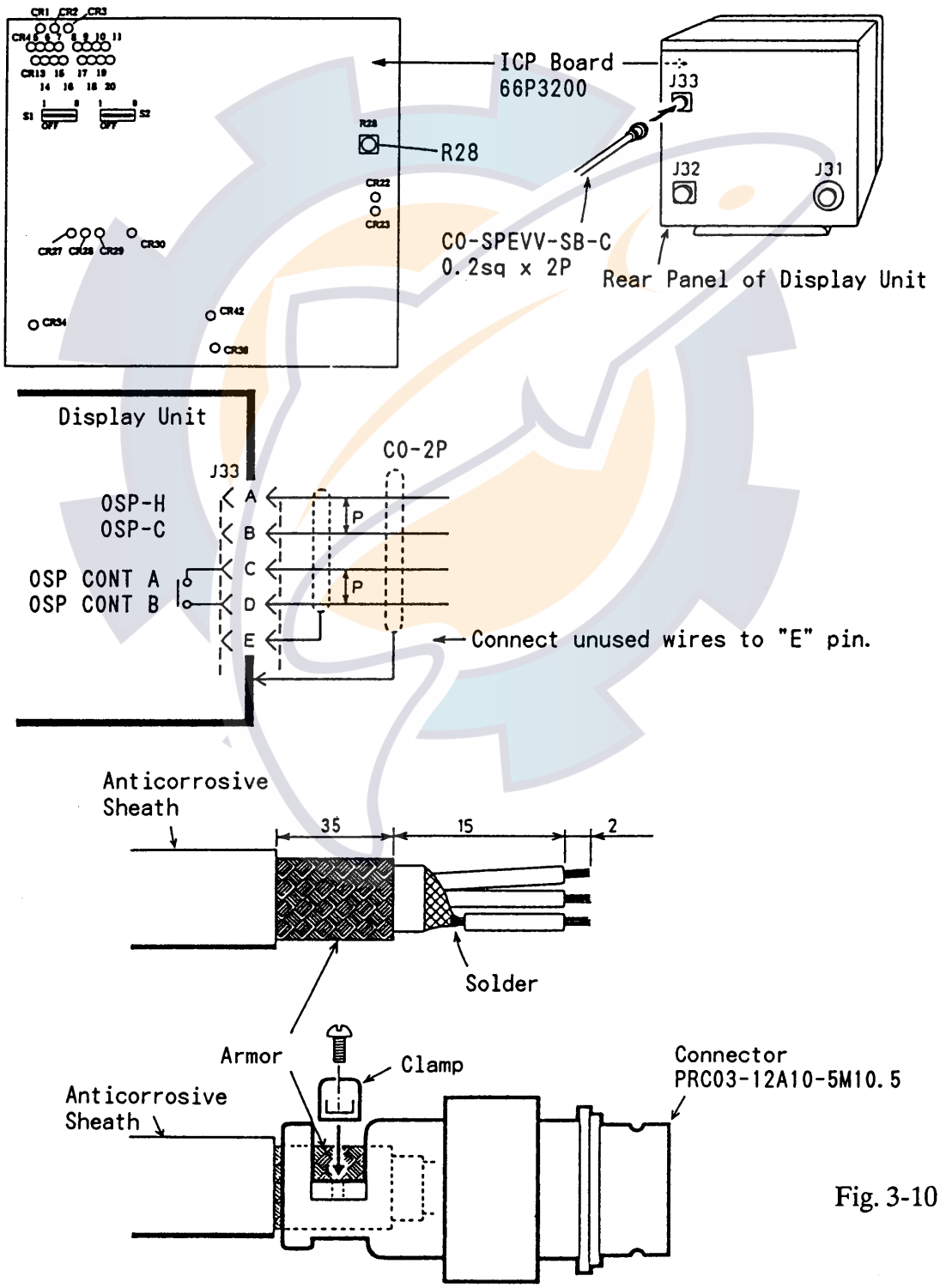

Fig. 3-10

3.5.2. Connection of external equipment to the transceiver unit

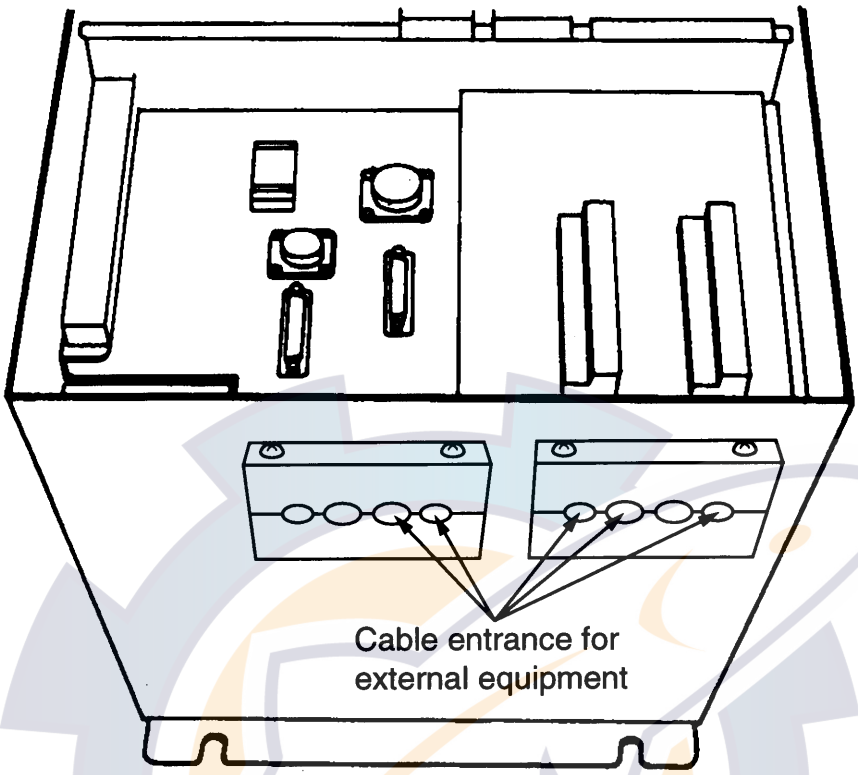

*Cable clamp can be fitted in any direction.

Fig. 3-11 Cable Entries for External Equipment

1) Signal cables for external KP and 200p/nm (CO-SPEVV-SB-C 0.2sq × 2p)

- Process the anticorrosive sheath and armor as shown below:

a. For external KP signal

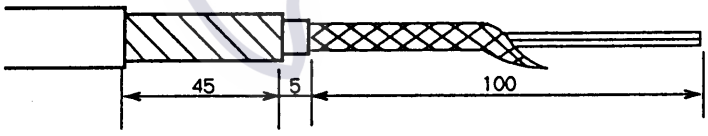

Fig. 3-12

b. For 200p/nm signal

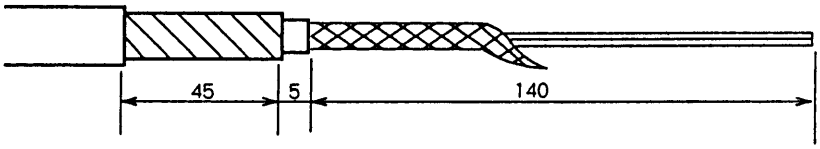

Fig. 3-13

- Fabrication of cores, shield and armor

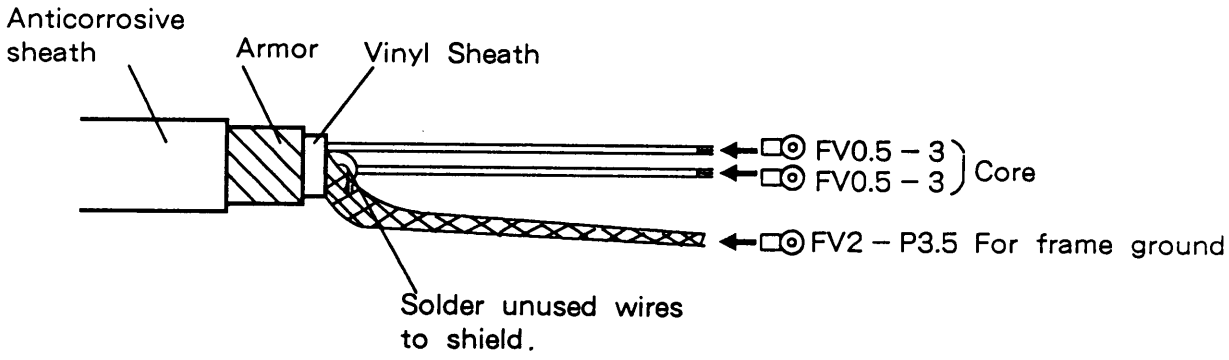

Fig. 3-14

- Fixing the cable

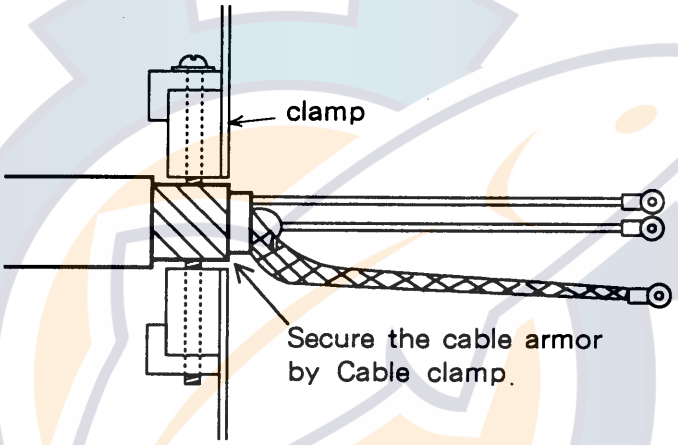

Fig. 3-15

2) Fabrication of the signal cables for gyro signal and true bearing (CO-SPEVV-SB-C 0.2sq × 5p)

- Process the anticorrosive sheath and armor as follows. Fabricate the cable in the same manner as above.

a) For gyro signal

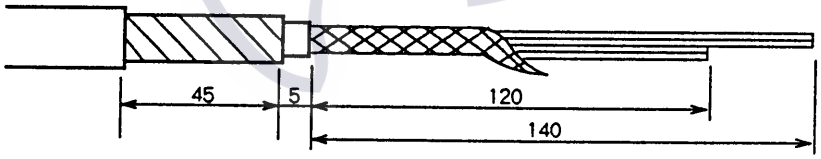

Fig. 3-16

b) For true bearing signal

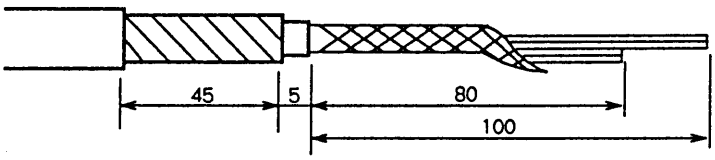

Fig. 3-17

3) Signal cable for CIF data (CO-SPEVV-SB-C 0.2sq × 5p)

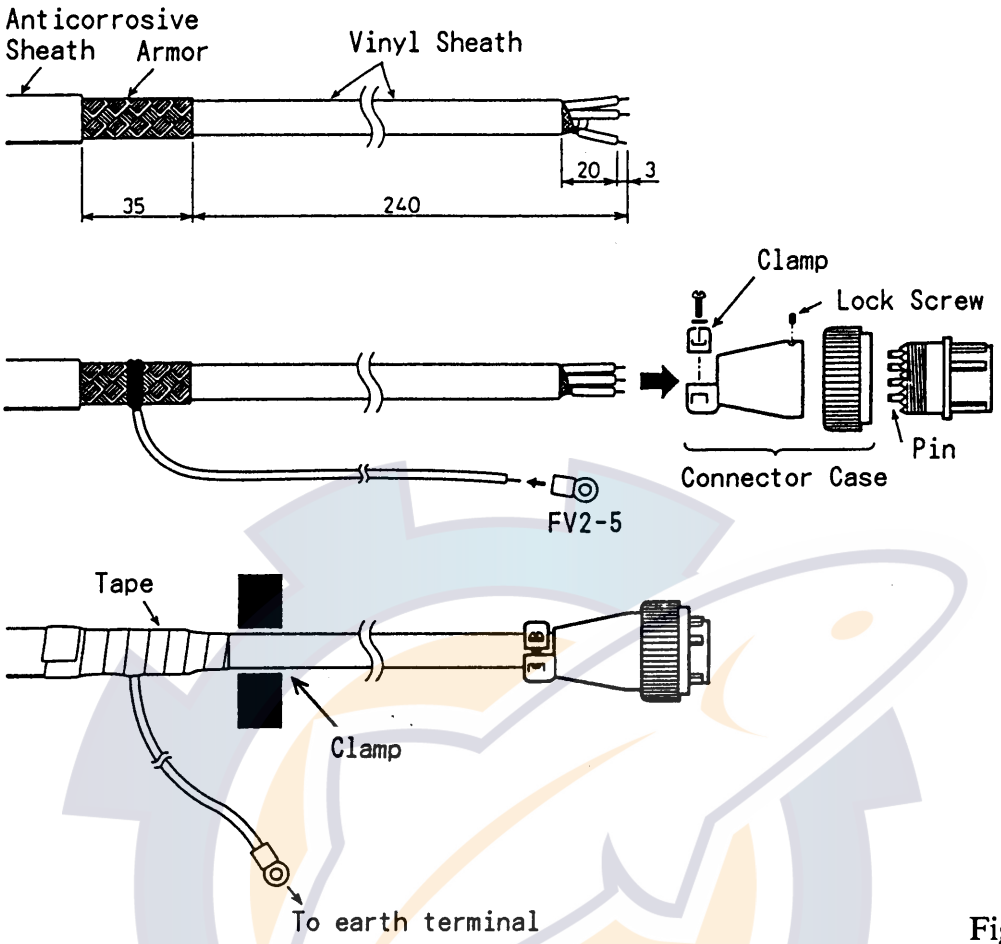

Fig. 3-18

4) Signal cable for NMEA data (CO-SPEVV-SB-C 0.2sq × 5p)

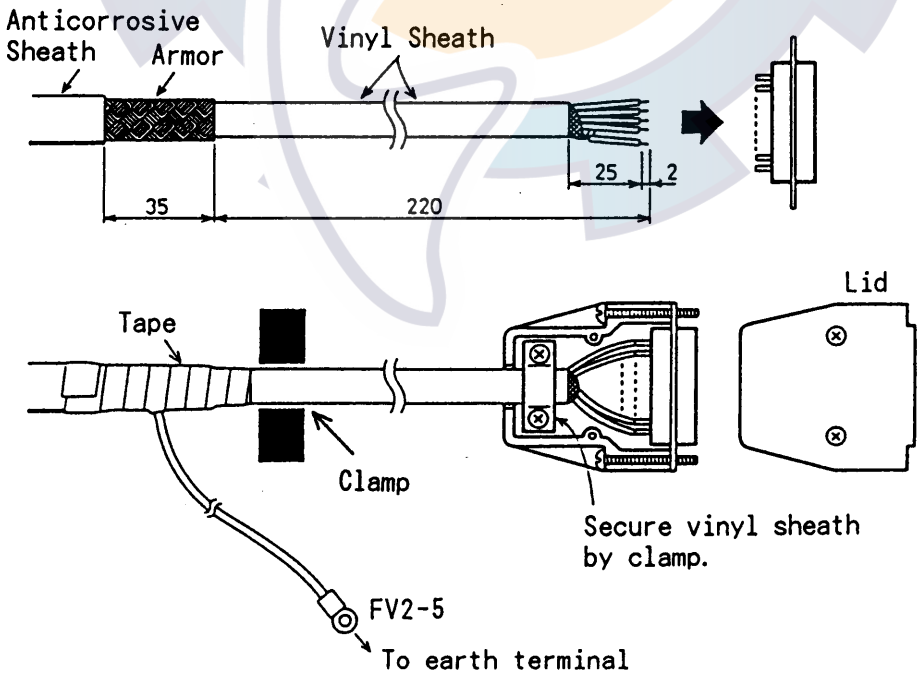

Fig. 3-19

5) Signal cable for distance indicator (TTYCY-2S)

- TTYCY-2S is Japan Industrial Standard (JIS) cable. Fabricate the cable as follows.

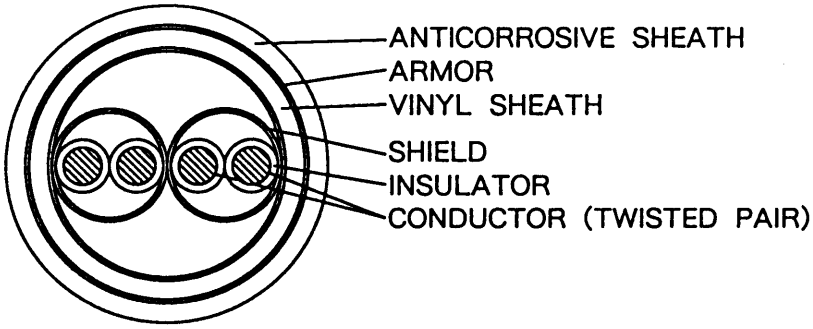

TTYCY-2S CABLE COMPOSITION

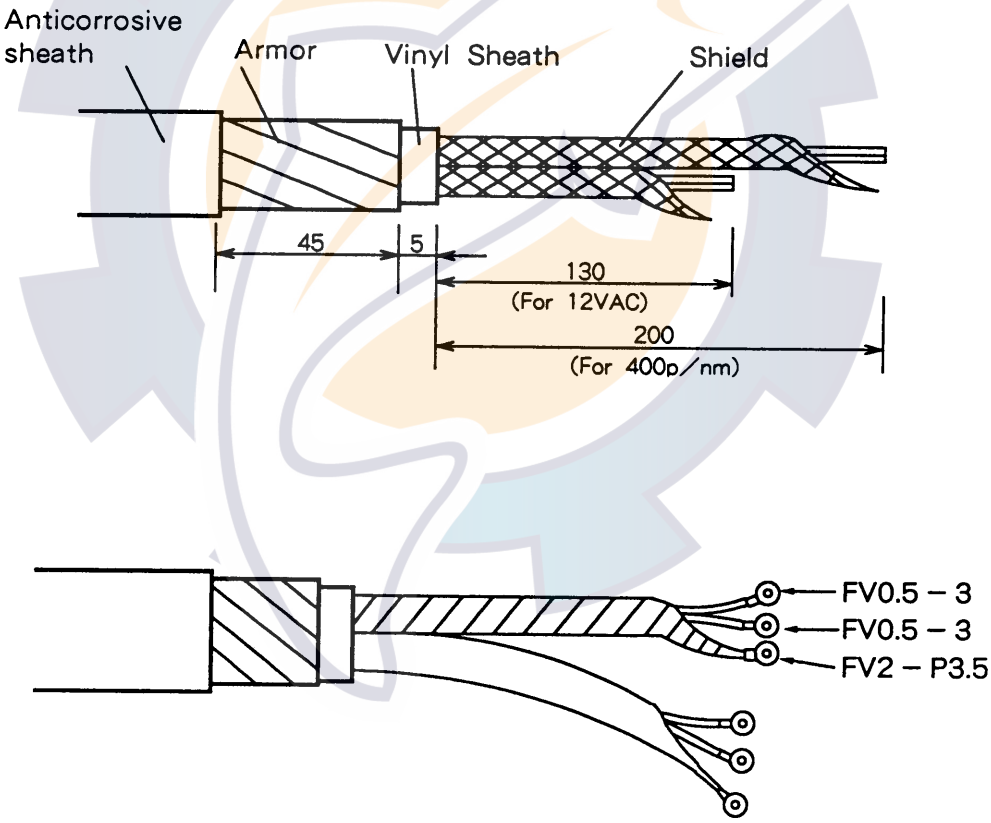

Fig. 3-20

3.6 DC-AC Inverter (TR-2450 or CSH-5050)

The cable connected between the ship's mains and the DC-AC inverter, and the transceiver unit and DC-AC inverter should meet the following requirements:

Connection	Distance between units	Cable to use
ship's mains ← DC-AC Inverter	less than 10 m	660V-DPYC-8
	more than 10 m	larger diameter than above
transceiver unit ← DC-AC Inverter	less than 25 m	DPYC-2.0
	more than 25 m	DPYC-3.5

Note: For remote control of the DC-AC inverter, install a remote switch near the display unit and use cable type DPYC-1.25 for the connection between the remote switch and the DC-AC inverter.

- DPYC-xx is the Japan Industrial Standard (JIS) cable. The conductor composition of these cables is as follows. If necessary, use equivalent cables.

Table 3-1 Conductor Composition

Cable Type	Nominal cross sectional area	Number of wires	Diameter of wire
660V-DPYC-8	8 m^2	7	1.2 mm
250V-DPYC-3.5	3.5 m^2	7	0.8 mm
250V-DPYC-2.0	2.0 m^2	7	0.6 mm
250V-DPYC-1.25	1.25 mm^2	7	0.45 mm

1) Fabrication of cable

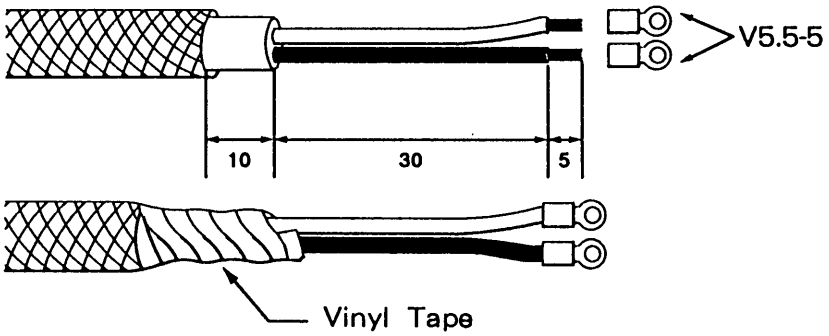

Fig. 3-21

2) Connection

TR-2450

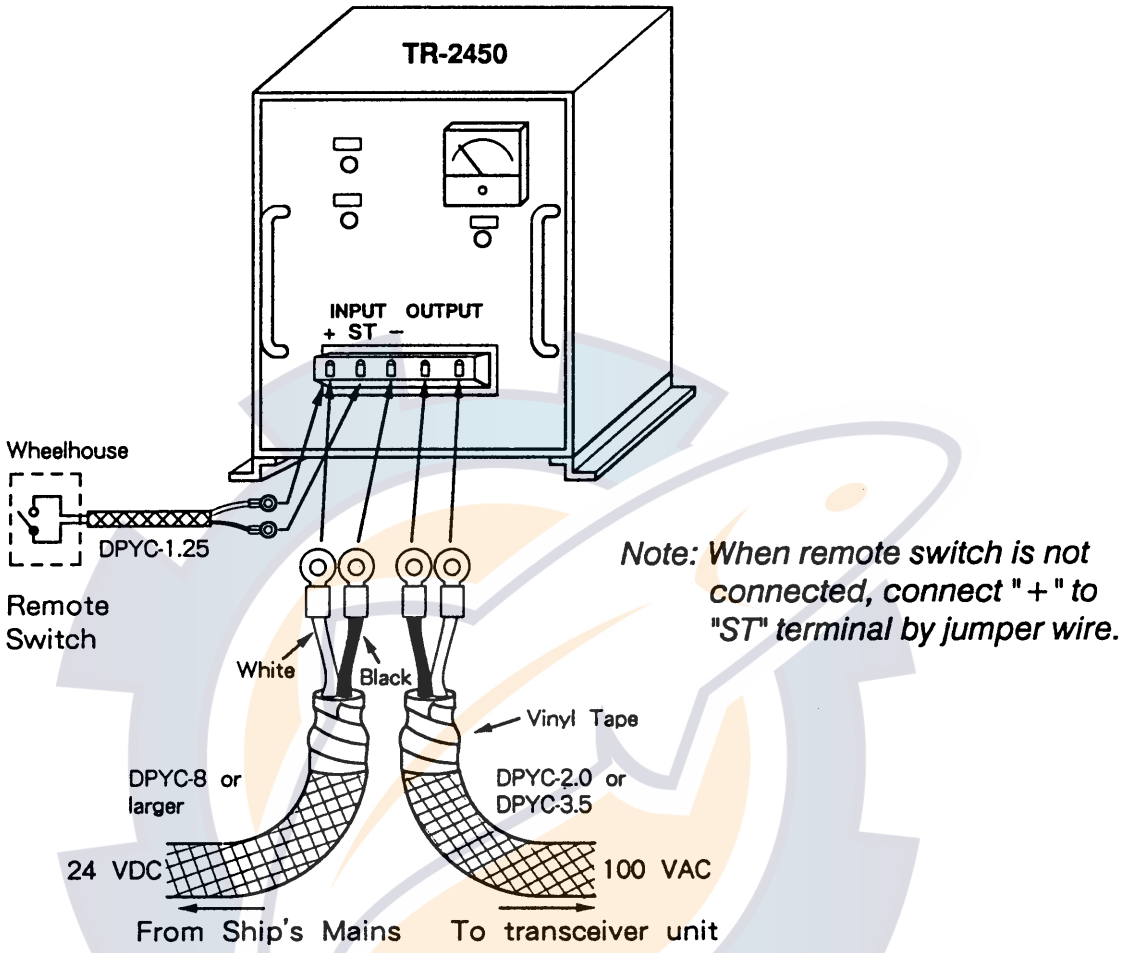

Fig. 3-22

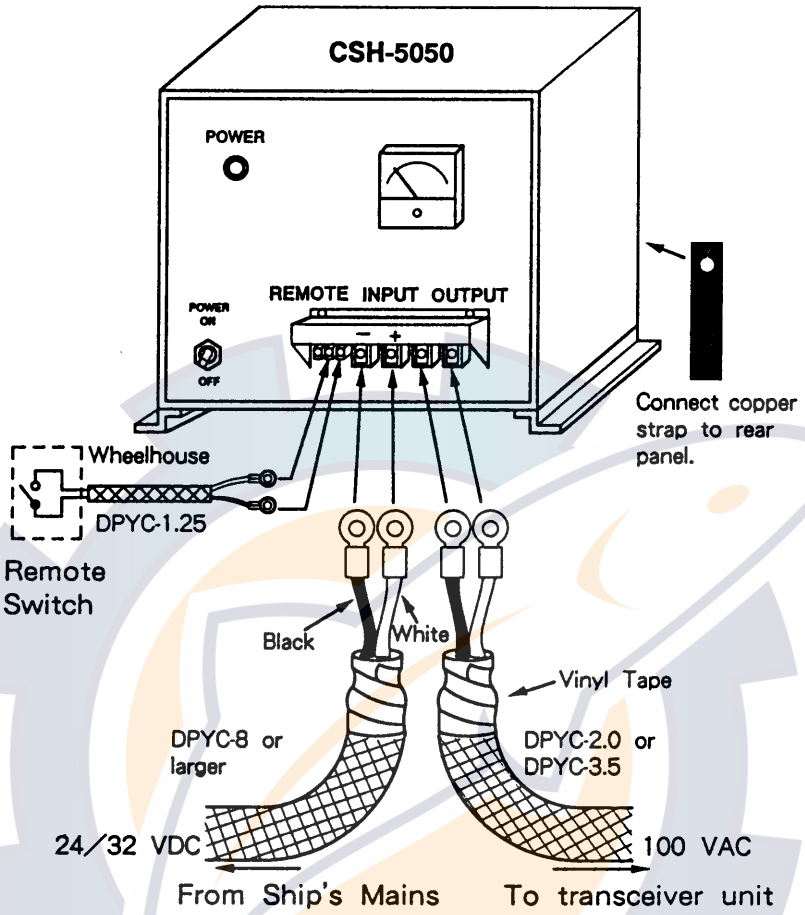

Note 1. *The remote terminals are connected parallel to the POWER switch of the unit. To turn the unit on/off by a remote switch, set the POWER switch to OFF.*

2. *The unit is set at the factory for operation from 24 VDC mains. For 32 VDC, change transformer tap connection and adjust potentiometer setting for required output voltage. For further information, see the installation instructions attached to the unit.*

Fig. 3-23

3.7 Matching Box

The transducer cable is relayed at the matching box to connect with the transceiver unit.

1) Transducer cable (coaxial cable).

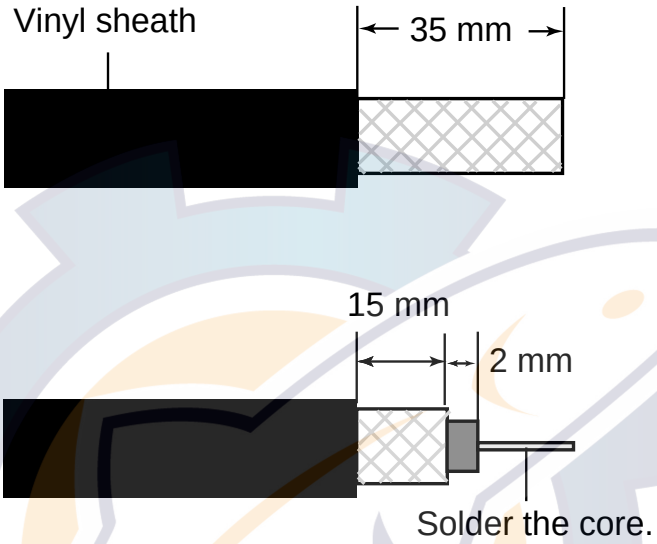

Fig.3-24 Fabrication of coaxial cable

2) 4 pair cable 66S1067 (with armor)
Attach crimp-on lugs. Fabricate the armor as bellows.

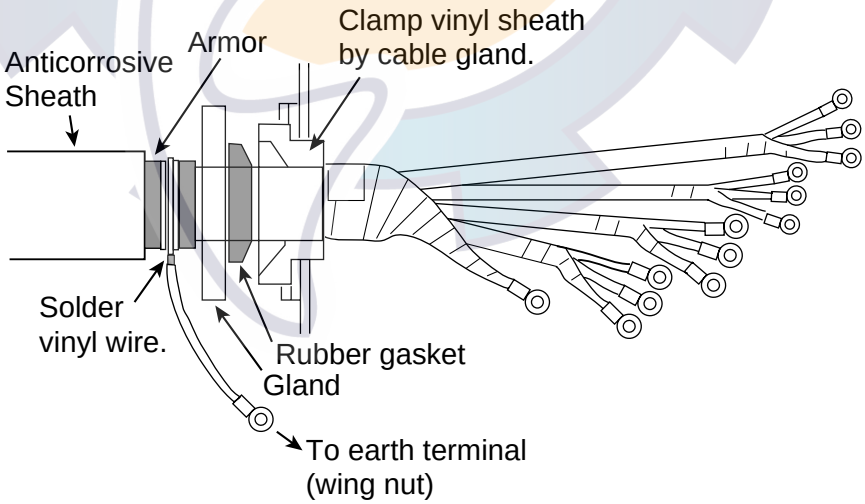

Fig. 3-25 Fabrication of 66S1067

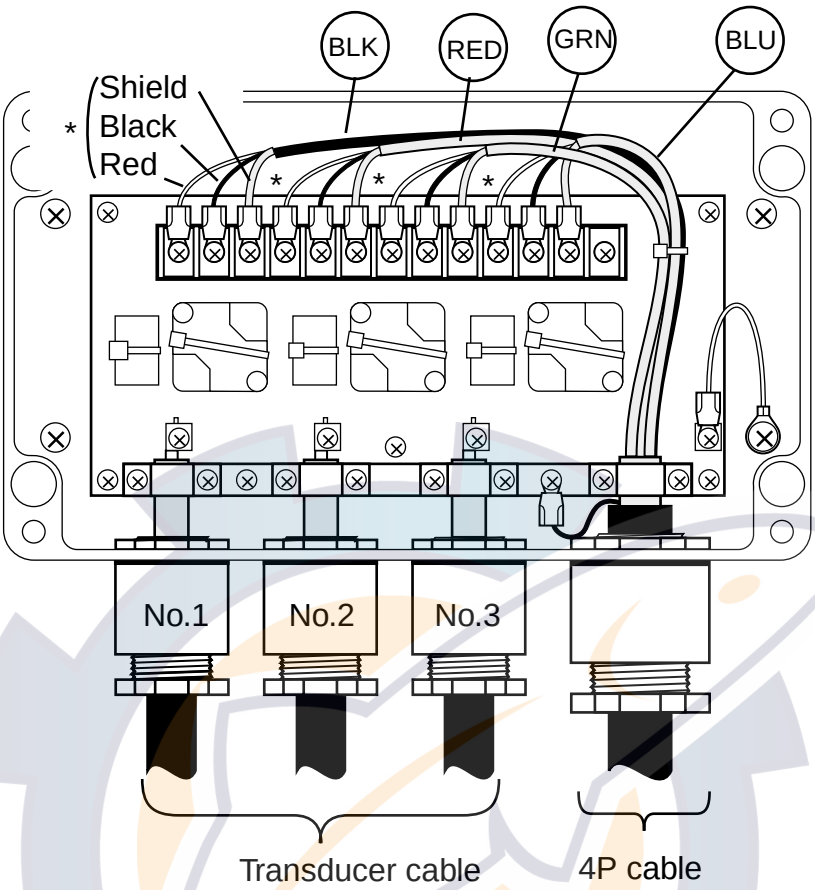

Fig. 3-26 Junction box inside view

CHAPTER 4 POST-INSTALLATION CHECK AND ADJUSTMENT

4.1 Line Voltage

1) Transceiver Unit

1. Turn the power switch on. Confirm that the POWER lamp lights and there is input voltage at the service outlet. Also confirm that 100 VAC is present between terminals # 10 and #11 of TB5.

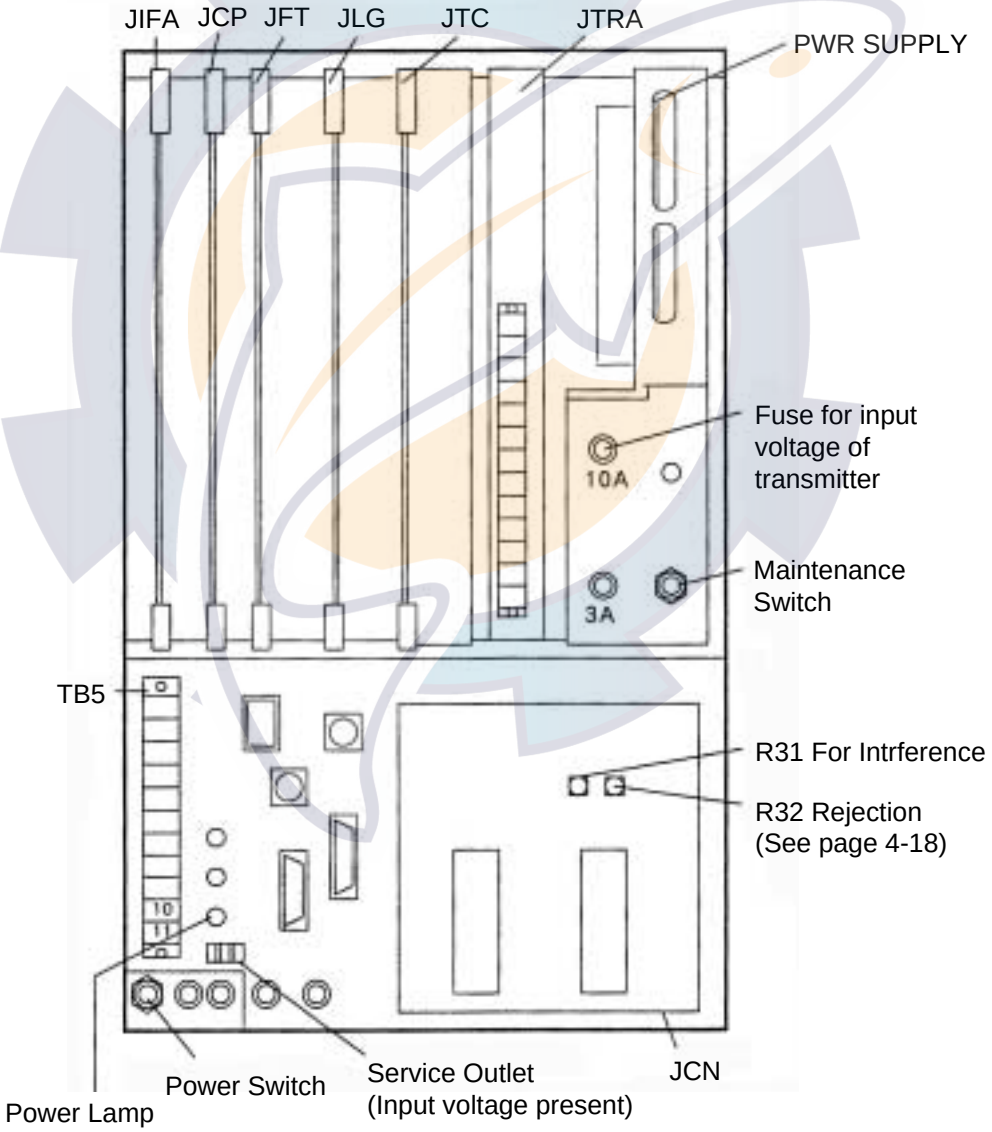

Fig. 4-1 Transceiver Unit, Inside view

2. Turn the power switch of the display unit on. Confirm that the power lamp (green) on the transceiver unit (see below) lights. Make sure the maintenance switch is off; then confirm the voltage at the following points.

PCB	Check Point	Rating	Adjustment Point
JPW 66P3220	CR8	Light (– 12V)	–
	TP1 (+) TP9 (–)	– 12.2V ± 0.1V	–
	TP2 (+) TP9 (–)	2.5V ± 15%	R10

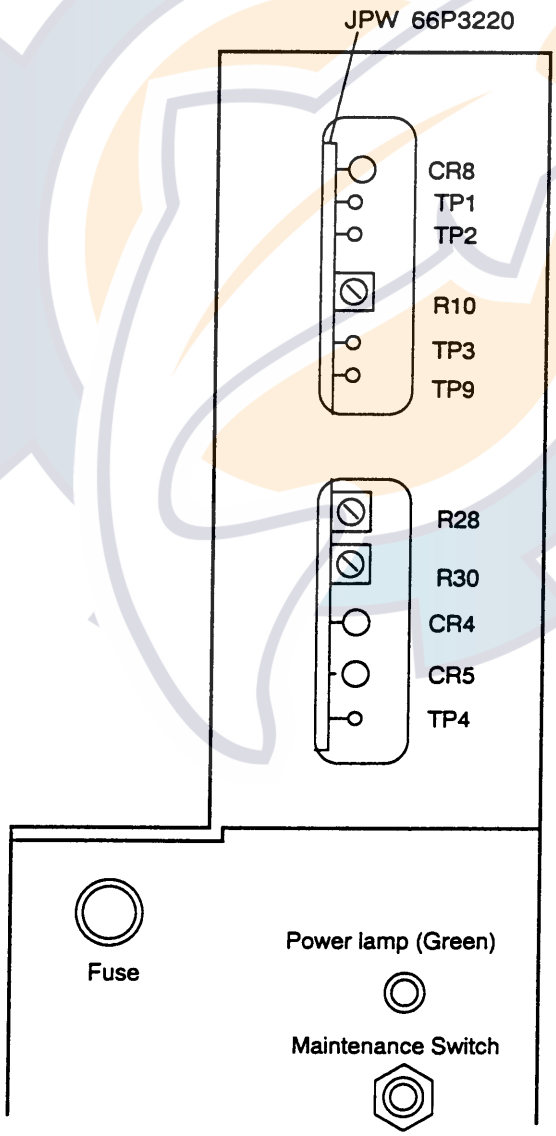

Fig. 4-2

2) Display Unit

1. Turn on the power switch of the transceiver unit. Confirm that CR2 (green LED) on the IRE board 66P3202 lights.

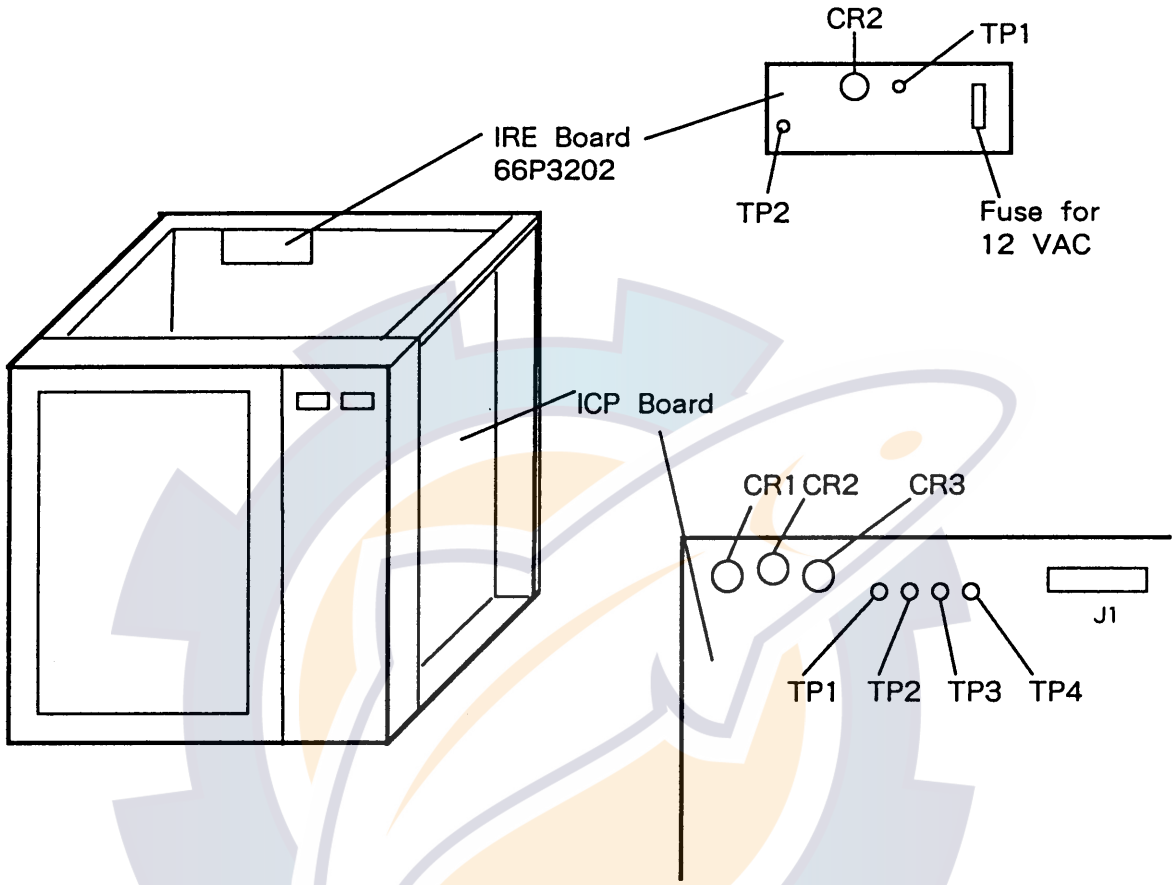

Fig. 4-3 Check Lamps inside the Display Unit

2. Press the power switch on the front panel of the display unit. Confirm that the cooling fan rotates and CR1 (+5V), CR2 (+12V) and CR3 (-12) LEDs light.

Check point for the line voltages on ICP board

TP1:	0V
TP2:	+ 5V
TP3:	+12V
TP4:	– 12V

4.2 LED Status Check

Note: Some LEDs have been deleted.

1) Transceiver Unit

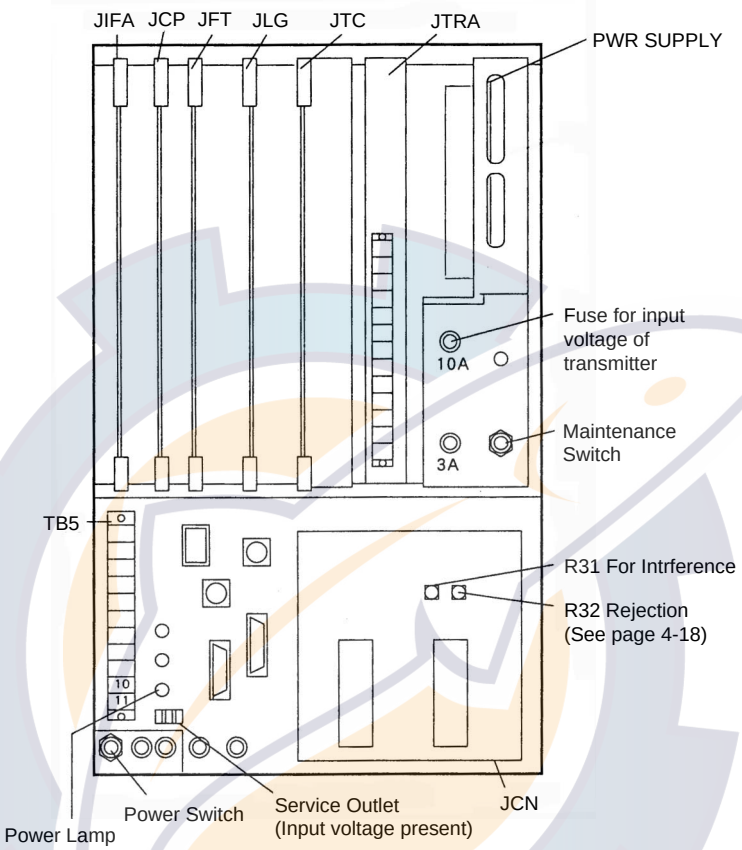

Fig. 4-4 Location of parts inside the Transceiver Unit

a) JCN Board 66P3221

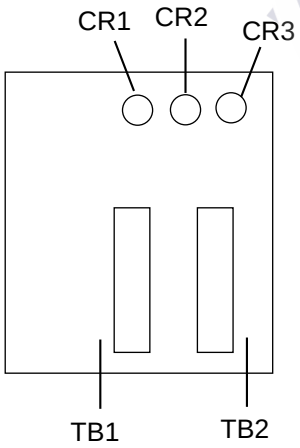

LED		Status	Remarks
No.	Signal		
CR1	LOG 200	◑	Brinks with ship's speed.
CR2	AUT-P	●	Normally OFF. Lightswhen ship's speed alarmsounds. After turning on the power, it lights until log pulse is output.
CR3	LOG IN	◑	Normally OFF. Blinks when external log signal is input.

Color of LED: orange

○ : Lit
◑ : Blinking
● : Off

b. JIFA Board 66P3800

LED Location	LED No.	LED Signal	Status	Remarks
	CR1	PASS	○ (GRN)	Lights when self-check of this board is OK.
	CR2	HALT	◑	Blinks with Halt command of CPU.
	CR3	DT1	○	Not used.
	CR4	TX1	◑	For factory check (Blinks once in every three seconds.)
	CR5	RX1	●	For factory check (Normally off).
	CR6	DS1	●	Not used.
	CR7	TXS	◑	Blinks or lights with transmission of echo data.
	CR8	CKS	◑	Blinks every 15 sec. with transmission of echo data clock.
	CR9	AUTX	◑	Blinks with output data from AUX port.
	CR10	AUTR	◑	Blinks with input data to AUX port.
	CR11	CIFT	◑	Blinks with output data from CIF port. (3 second interval)
	CR12	CIFR	◑	Blinks with input data to CIF port.
	CR13	NMET	◑	Blinks with output data from NMEA port. (3 second interval)
	CR14	NMER	●	Blinks with input data to NMEA port.
	CR15	GYRC	◑	Blinks with clock input from AD-10S.
	CR16	GYRD	◑ (GRN)	Blinks with gyro data input from AD-Converter. (looks lit)
	CR17	RELC	◑	Blinks with clock output of true bearing.
	CR18	RELD	◑ (GRN)	Blinks with data output of true bearing. (CR17 and CR18 synchronizes)
	CR19	LOG2	◑	Blinks with output of 200p/nm signal. (Synchronized with relay chatter)
	CR20	LOG1	◑	Blinks with external log pulse input.
	CR21	EXP1	(◑)	Blinks with external KP signal 1 input.
	CR22	EXP2	(◑)	Blinks with external KP signal 2 input.
	CR23	DPCS	◑	Blinks with internal signal.

Color of LED is orange unless noted otherwise.

c. JCP Board 66P3205

LED Location	LED No.	LED Signal	Status	Remarks
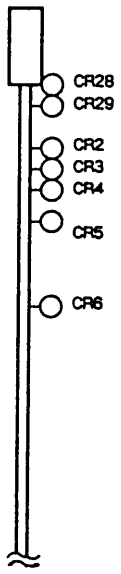	CR28	TXD	◑	Blinks irregularly with data output to display unit.
	CR29	RXD	◑	Blinks irregularly with data input from display unit.
	CR2	KP	◑	Blinks with transmission KP output.
	CR3	ADKP (EST)	◑	Blinks with echo level data transmission to display unit. (Lights once in every 15 sec.)
	CR4	EG	◑	Blinks with echo gate. Synchronizes with KP.
	CR5	EXKP1	◑	Blinks with external KP input.
	CR6	PASS1	○ (GRN)	Lights when self-check of this board is OK.

d. JFT board

LED Location	LED No.	LED Signal	Status	Remarks
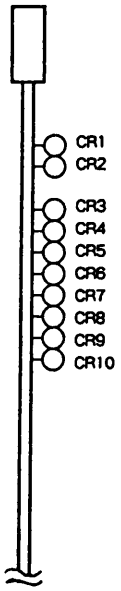	CR1	RUN	◑	Blinks irregularly at normal operation.
	CR2	PASS	○ (GRN)	Lights when self-check of this board is OK.
	CR3	TASK1	◑	Some of these LEDs blink when the equipment is working normally.
	CR4	TASK2	◑	
	CR5	TASK3	◑	
	CR6	TASK4	◑	
	CR7	TASK5	◑	
	CR8	TASK6	◑	
	CR9	TASK7	◑	
	CR10	TASK8	◑	

e. JTX Board 66P3209

LED Location	LED		Status	Remarks
	No.	Signal		
CR2	CR2	BEAM1	◑	Blinks with transmission.
	CR4	BEAM2	◑	
CR4	CR5	+B	○	Lights when transmitter high voltage is applied.
CR5	CR7	BEAM3	◑	Blinks with transmission. CR2, CR4 and CR7 synchronizes with KP (CR2 of JCP board).
CR7				

2) Display Unit

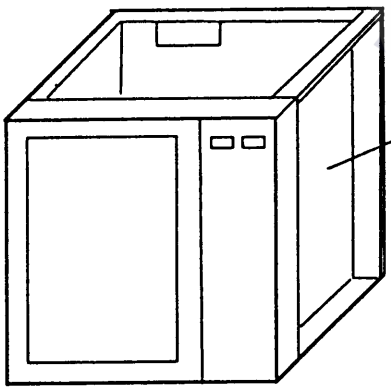

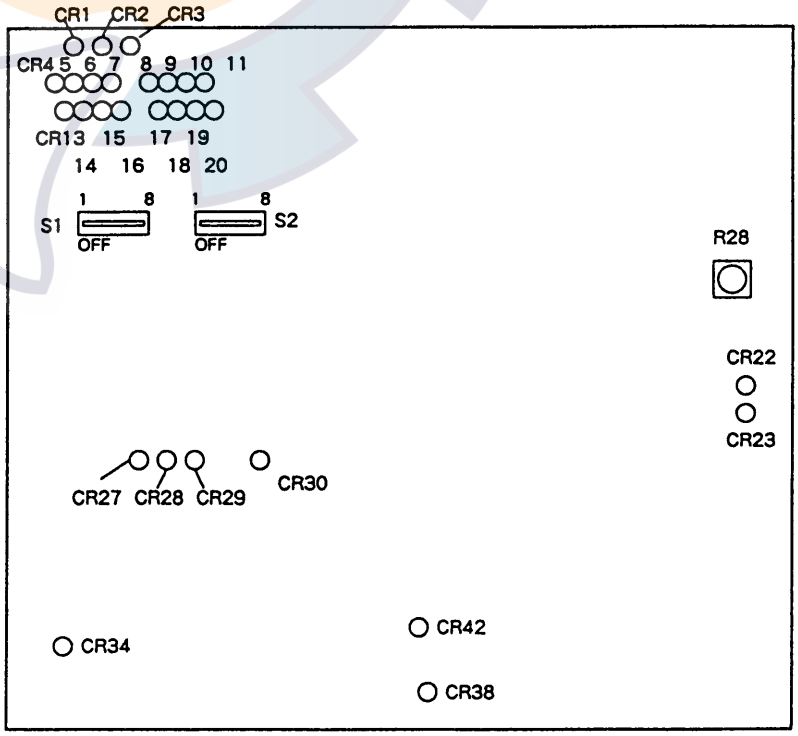

Fig. 4-6

LED		Status	Remarks
No.	Signal		
CR1	+5V	○ (GRN)	Lights when line voltages are normal.
CR2	+12V	○ (GRN)	
CR3	−12V	○ (GRN)	
CR4	D0	◑	Blinks randomly. (Task status of CPU is displayed.)
CR5	D2	◑	
CR6	D4	◑	
CR7	D6	◑	
CR8	D8	◑	
CR9	D10	◑	
CR10	D12	◑	
CR11	D14	◑	
CR13	D1	◑	
CR14	D3	◑	
CR15	D5	◑	
CR16	D7	◑	
CR17	D9	◑	
CR18	D11	◑	
CR19	D13	◑	
CR20	D15	◑	
CR22	TXD	◑	Blinks irregularly with data output to transceiver unit.
CR23	RXD	◑	Blinks irregularly with data input from transceiver unit.
CR27	EDA	◑	Blinks with receive echo data from transceiver unit.
CR28	ECK	◑	Blinks with clock of receive echo data from transceiver unit.
CR29	EST	◑	Blinks with echo start signal. (CR27, 28 and 29: once every 15 seconds)
CR30	INT	◑	Blinks with interrupt signal to CPU.
CR34	STD.P	◑	Blinks with 1 second clock of internal timer.
CR38	RESET	● (RED)	Normally OFF. Just after the power is turned on or off, it lights momentarily (lights with reset signal of CPU).
CR42	HALT	◑	Blinks with halt command of CPU. (Looks OFF)

4.3 DIP Switch Setting

1) Transceiver Unit

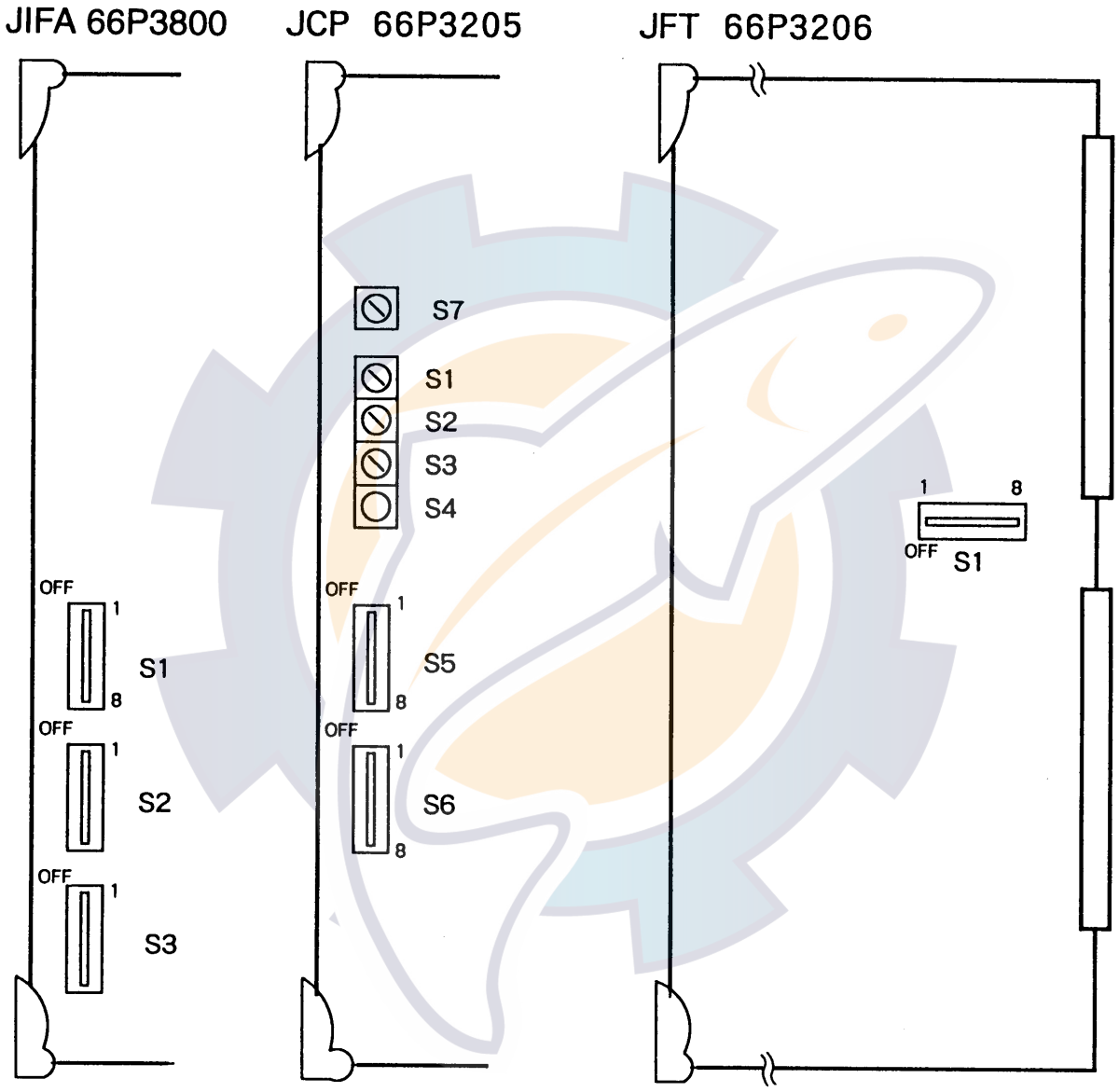

Fig. 4-7 Location of DIP Switches

DIP switch settings on each board

PCB	Symbol No.	Factory Setting NO.	ON	OFF	Functions
JIFA 66P3800	S1	1		○	NMEA OFF: Ver. 2.0 (With check sum at last output data) ON: Ver. 1.5 (Without check sum)
		2		○	No use
		3		○	Log pulse out OFF: Forward only ON: Forward and Backward
		4		○	No use
		5		○	CH-35: No use CH-35H: Receive data format for AUX port (Effective when S2-1/2 are set to ON.)
		6		○	

5	OFF	ON	OFF	ON
6	OFF	OFF	ON	ON
Data	under fined	DAT3	DAT2	DAT1

DAT1: TKC (<CR>DDDdd)
DAT2: TKC (DDDd*<LF>)
DAT3: Hokushin ($HERHRC, DDDdd, +/-RRr*cs)

		7		○	Depth data format OFF: CIF, ON: NMEA
		8		○	Temperature data format OFF: CIF, ON: NMEA
	S2	1		○	Bearing data format
		2		○	
		3		○	Log pulse measurement layer OFF: Reference layer, ON: 1st layer
		4	○		Set to ON when S #3 is off.
		5		○	Bearing output at slow speed (less than 0.5 kts) OFF: True bearing, ON: Heading
		6		○	Bearing output data OFF: True bearing, ON: Heading
		7		○	Signal level of AUX port OFF: Current loop, ON: RS-232C
		8		○	CIF data ON/OFF OFF: Standard, ON: Option

1	OFF	ON	OFF	ON
2	OFF	OFF	ON	ON
Sensor	ADC	CIF	NMEA	AUX

ACD: AD converter (Furuno clocked-serial)

PCB	Symbol No.	Factory Setting			Function
		No.	ON	OFF	
JIFA 66P3800	S3.	1		○	CIF data output OFF: Data created by CI-35/35H only ON: CI-35/35H data combined with incoming CIF data (through-line)
		2		○	Analog indicator OFF: for 30 kt range scale indicator ON: For 40 kt range scale indicator
		3		○	Interference rejection by KP1 OFF: OFF ON: ON
		4		○	Interference rejection by KP2 OFF: ON: ON
		5		○	Synchronous transmission with KP1 input (available with #3 ON) OFF: OFF ON: ON
		6		○	Inclinometer ON/OFF OFF: OFF ON: ON
		7		○	Bearing sensor OFF: Yes ON: No (always HU)
		8		○	CH-35: No use CH-35H: NMEA port ON/OFF: OFF; OFF, ON; NMEA 0183 ON
JCP 66P3205	S5	1		○	Selection of bottom tracking reference beam
		2		○	1: OFF / ON — OFF / ON 2: OFF / OFF — ON / ON Beam: Beam 1 / Beam 2 — Beam 3 / All
		3		○	Transmission output OFF: Level 2 (normal) ON: Level 1 (reduced)
		4		○	TX repetition rate & pulse width in water tracking mode OFF: Fast rate/narrow pulse (Standard) ON: Slow rate/wide pulse (Deep)
		5		○	Automatic compensation of sound velocity by thermal sensor OFF: Yes ON: No
		6		○	Smoothing response for current indication OFF: Slow (standard) ON: Fast (less stable)
		7		○	Smoothing response for current indication in nav-aided mode (*Effective on CI-35/35H only) OFF: Fast (standard) ON: Slow (high stability)
		8		○	Validity of GPS data when ship's speed is almost 0 kt. OFF: Valid ON: Invalid (reject)*

PCB	Symbol No.	Factory Setting			Functions
		No.	ON	OFF	
JCP 66P3205D	S6	1	○	○	Menu 4 screen presentation OFF: No (CI-35), ON: Yes (CI-35H)
		2		○	No function assigned (Keep these switches OFF.)
		3		○	
		4		○	
		5		○	
		6		○	
		7		○	
		8		○	
	S7 Rotary Switch	0			Echo level selection (to monitor at TP8) 0: TVG compensated signal of beam 1 1: Raw signal of beam 1 (without TVG) 2: TVG compensated signal of beam 2 3: Raw signal of beam 2 (without TVG) 4: TVG compensated signal of beam 3 5: Raw signal of beam 3 (without TVG)
	S1	0			TVG curve selection 0: For water temperature 12°C 1: For water temperature 26°C
	S2				Normally 0 (Keep these switches at “0” positions.)
	S3				
	S4				
JFT 66P3206B	S1	1		○	Factory use (All switches should be kept OFF for normal operation.)
		2		○	
		3		○	
		4		○	
		5		○	
		6		○	
		7		○	
		8		○	

2) Display Unit

ICP board 66P3200 (Right side of the display unit)

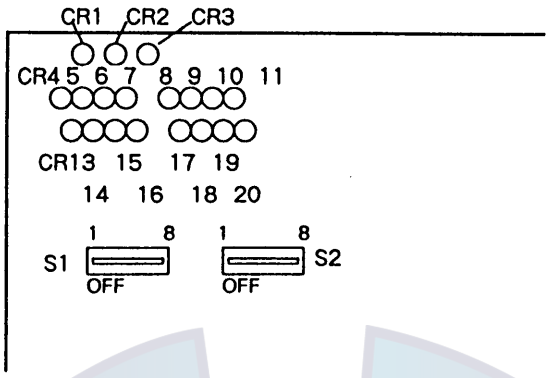

Fig. 4-8

PCB	Symbol No.	Factory Setting			Functions
		No.	ON	OFF	
ICP 66P3200	S1	1		○	Bearing indication method OFF: 32-point notation in large characters ON: Degree notation in large characters
		2		○	Unit of distance/range OFF: nm ON: km
		3		○	Current vector pointing direction OFF: Direction flowing to ON: Direction flowing from
		4		○	Manual heading input OFF: Disable ON: Enable
		5	○		Display language (See S2 descriptions below.) OFF: Japanese ON: Other than Japanese
		6		○	Panel check OFF: Normal operation ON: Test
		7		○	Black/white gradation test OFF: Normal operation ON: Test
		8		○	Color gradation test OFF: Normal operation ON: Test
	S2	1	○		English display (OFF: No ON: Yes)
		2		○	Norwagian display (OFF: No ON: Yes)
		3		○	Spanish display (OFF: No ON: Yes)
		4		○	French display (OFF: No ON: Yes)
		5		○	Reserved for future expansion
		6		○	
		7		○	
		8		○	

4.4 TX Output Check

To check the TX output waveforms, turn DIP switch S5-#4 on JCP board 66P3205 (See page 4-11) to ON and set the [TRACK MODE] key on the front panel to "water tracking mode".

Check Point of TX Output Waveforms

	Check Point	
	JTR Board TB3	Junction Box
Beam 1	Terminal 1 (H) 2 (C)	Terminal 1 (H) 2 (C)
Beam 2	4 (H) 5 (C)	4 (H) 5 (C)
Beam 3	7 (H) 8 (C)	7 (H) 8 (C)

(If possible, check at the junction box.)

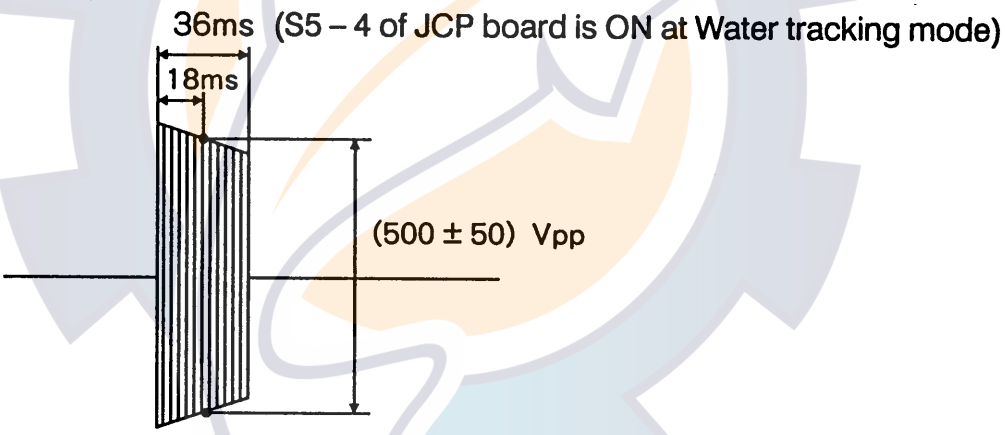

Fig. 4-9

Confirm that the + B voltage at the Echo Check Screen is 175 ± 25. (This value is approximately 105 when DIP switch S5-#3 is ON (level 1). See page 4-11.)

4.5 External Noise and Interference Check

4.5.1 External Noise Check

Noise level can be measured (without transmission) at the echo check screen.

1) Preparation
   1. Remove the 10 A fuse in the power block of the transceiver unit. See Fig. 4-1.
   2. Dismount the JTX board. See Fig. 4-1.
   3. Execute the echo check on menu 2.
   4. Turn TVG SET off by operating the [MODE] key.
   5. Set the ECHO DEPTH at 700 m by operating the [⬍]

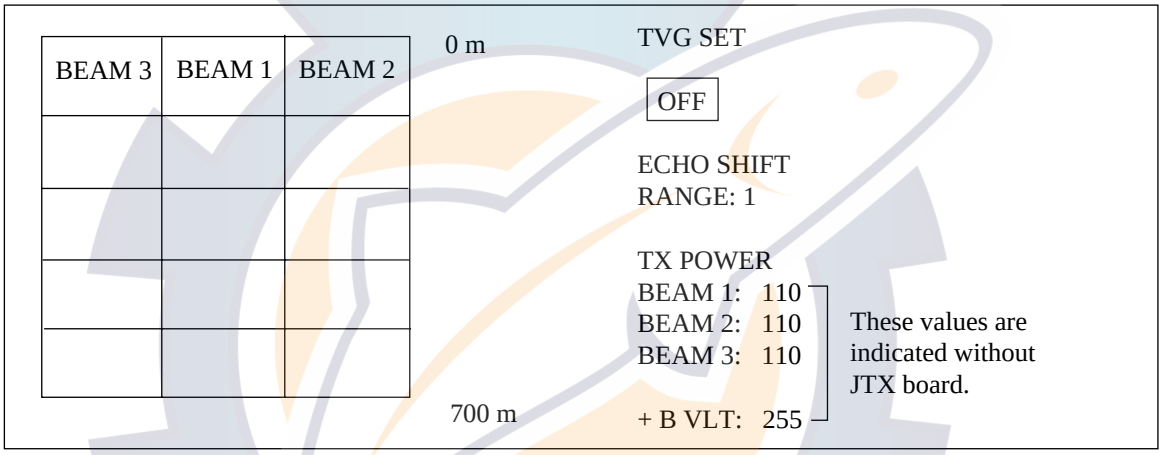

Fig.4-10

2) Check at mooring
   1. Adjust the ECHO SHIFT RANGE by the [◀▶] knob, noting the ECHO SHIFT RANGE when the color of echograms change from blue to black.
   2. This vaiue should be 7 or higher at normal noise level. If the value is less than 7, noise is excessive.

3) Check at cruising

1. Continuing the echo check with the same value of ECHO SHIFT RANGE, change the ship's speed.

2. Observe the ehogram. The echogram is presented in 16 color gradations and one level of gradation corresponds to twice the input level. The color depends on the input level as follows:

   Black (lowest) → blue → light-blue → cyan → light-cyan → light-green → green → yellow-green → yellow → yellow-orange → orange → vermilion → red → reddish brown → brown → dark brown (highest)

3. Confirm that the noise levels are almost even on all three beams and pulse-like periodic noise does not appear.

4. If the color changes by more than 4 gradations than that at mooring, the noise level is excessive. In this case check the ground of each unit. (If the cruising noise is too heavy, you must consider the transducer relocation or reshaping.)

4.5.2 Interference Check

Perform this check where the depth is greater than 50 meters (preferably about 100 meters) and there are no other ships.

1. Turn off all ultrasonic wave generating equipment (echosounder, sonar, etc).

2. Operate the CI-35/35H in the ground tracking mode. Confirm that the indications of ship's speed and direction are reasonable.

3. Observing the display, turn on and operate the echo sounder and sonar one by one with its output power and pulse length set at the maximum. For the sonar, change the tilt and train angles.

4. If the display changes abnormally when some equipment is turned on and operated, that equipment is interfering with the CI-35/35H.

5. The interference can be removed by connecting the interfering equipment to the built-in interference rejector in the transceiver unit, as explained on the next page.

Note: Use of the Interference Rejector reduces the response against the change of tidal speed.

How to check the level of an interfering signal

1. Set the equipment as described in paragraph 4.5.1 1). Set the ECHO SHIFT RANGE to the value which the color of the echograms just change from blue to black.

2. At a depth greater than 50 meters, operate other equipment (echo sounder, sonar) one by one and observe the echogram on the echo check screen.

3. When there is interference, string-like echoes appear on the screen.

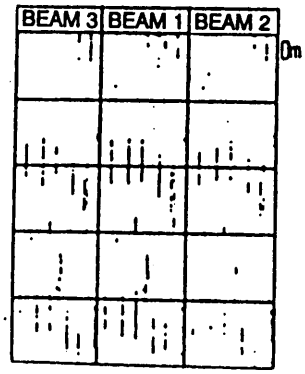

Fig. 4-11

4.5.3 Interference Rejection

Up to two interfering equipments can be connected to the interference rejection circuit in the transceiver unit. This circuit receives the keying pulse (KP) from the interfering equipment to reject interference.

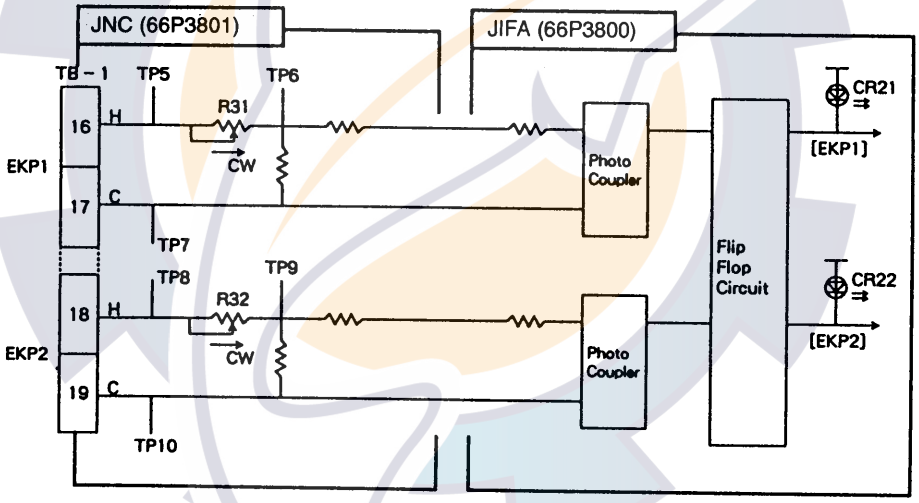

Fig. 4-12

(1) Check of keying pulse

The following keying pulse is required from the interfering equipment.

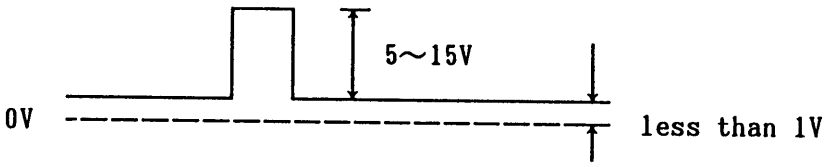

Fig. 4-13 Keying pulse needed

If the level is out of the ratings or KP output circuit is not provided, take the measures shown on the next two pages to prevent equipment malfunction.

- Buffer circuit for positive going KP.

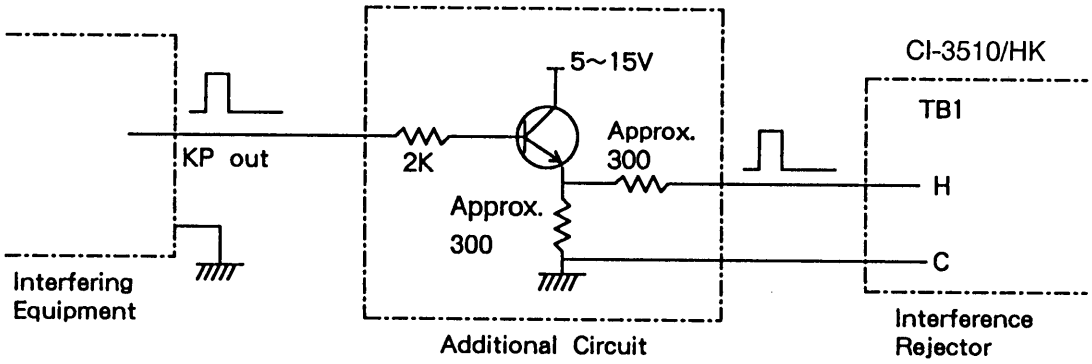

- Buffer circuit for negative-going KP.

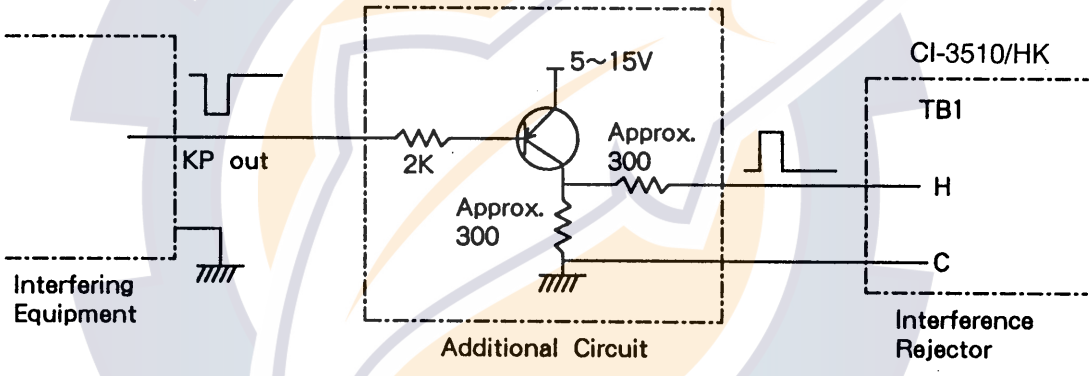

The following method also is available.

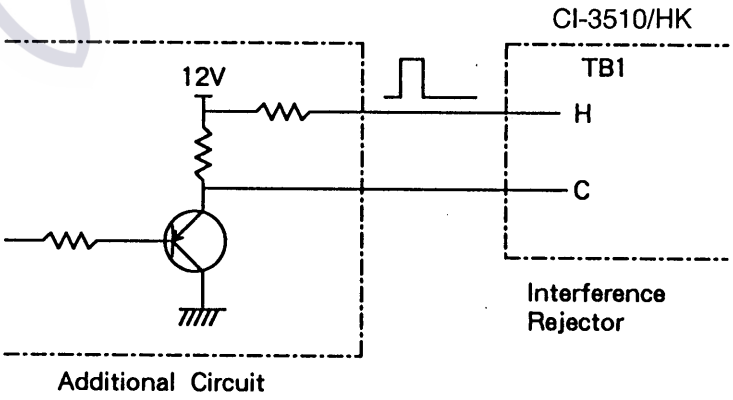

Fig. 4-14 Buffer Circuit for Keying Pulse (KP)

2) Adjustment

1. Set DIP switch S3 on the JIFA board 66P3800 as follows:

   A. When a KP is connected to EX KP (1) of TB1, set S3-#3 ON.
   B. When a KP is connected to EX KP (2) of TB1, set S3-#4 ON.
   (Refer to the interconnection diagram on pages S-1 and 4-11.)

2. Adjust the potentiometer on the JCN 66P3801 as follows:

   A. When KP is fed to EX KP1;
   Turn R31 on the JCN board CW gradually until CR21 on the JIFA board starts flickering. Then, turn R31 CW by one more step.

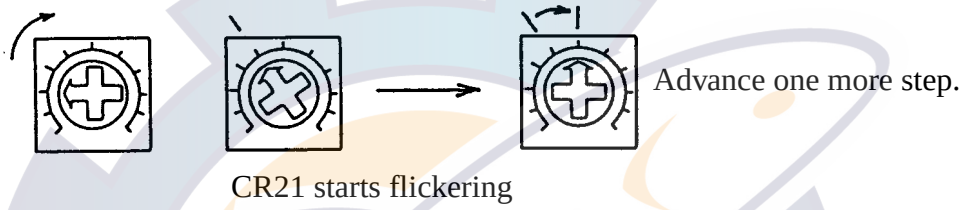

Fig. 4-15 Adjustment of R31;

   B. When KP is fed to EX KP2;
   Adjust R32 until CR22 starts flickering. Then, turn R32 CW by one more step.

3. Enter the distance (0.1 m) between the transducer of the CI-35/35H and that of the interfering equipment at the menu 3 screen.

   A. For EX KP 1, set it at EX KP I of the menu 3 screen.
   B. For EX KP 2, set it at EX KP 2 of the menu 3 screen.

Then, when the receive time of the transmission pulse of the interfering equipment coincides with a measuring period of current, receive data of that period is ignored, thus avoiding interference.

Note: When transmitting with the external transmission pulse (KP) taken from an external device (echosounder, sonar, etc.), the repetition rate of the KP should be more than 500 ms. The repetition rate may become shorter than 500 ms when the range setting on the external device is less than 100 m. Therefore, set the range on the external device to more than 100 m.

4.6 Sea Trial Check

4.6.1 Ship's Speed Test

Do the milepost test where ground tracking measurement can be done.

1. Reset the distance run at the moment the milepost test is initiated.
2. Read the distance run at the moment the milepost test is completed.
3. Calculate true ship's speed from the data of the milepost test and ship's speed of the CI-35/35H from that of the distance run.
4. If the error is more than ± (1% + 0.1 kt), correct it. Record the data in Table 1.
5. Repeat the milepost test several times, and confirm that the error is within ± (1% + 0.1 kt).
6. Record the ship's speed every 10 seconds in table 2.
7. Calculate the average ship's speed from the data in the table 2 to compute unit accuracy.

4.6.2 Current Information Check

Confirm that current speed/direction display is uniform in all directions and does not change whatever the ship's heading. Use the ground tracking mode to record the data.

* Before beginning this test, set TIDE AVERAGE to 2 minutes and TIDE HISTORY to 15 seconds at menu 1.
* At sea trial, the ship's draft is shallow due to no "load," so air bubbles may affect equipment performance.

1. Run your boat at a speed around 12 kts, following square course shown below. Each side of the square is about 1 mile in length. It should take about 5 minutes to cover one side of the course. After completing a side of the course, turn, wait for course to stabilize, then run straight for five minutes.

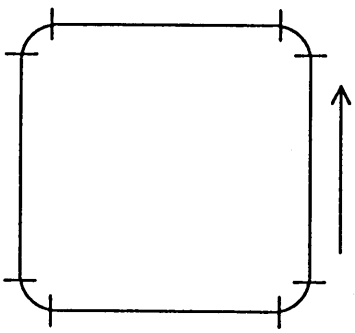

Ship's route:
Advance straight 1 mile approx.

Fig. 4-16

2. Record the ship's speed and tide data every 30 seconds in table 3. As a general rule, set the Mode to North Up. Only when there is no gyro signal should the data be recorded using the Heading Up Mode. If a wind meter is available, record the speed and direction of the wind.

3. On a separate of paper, plot the current speed and direction. Confirm the current reading is stable in any ship's heading.

   Instead of plotting on paper, you may use the tide history function of CI-35/35H. Just after completion of test route, press the [HISTORY] key and observe the tide history. If it is working normally, the tide vectors should point almost constant direction.

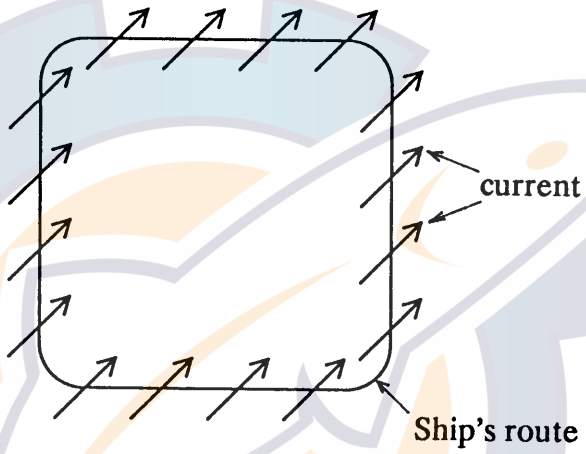

Fig. 4-17

Caution

1. *When a "bearing sensor" is connected in lieu of a gyrocompass, accurate measurement of current direction is not expected because the bearing data itself is in error.*

2. *Because current speed/direction differ with season, sea area, and time of day, be sure to look at the entire data rather than just portions of it.*

4.6.3 Course Calibration

The CI-35/35H has the nav-aided mode to measure absolute tides even in deep waters where ground tracking is unattainable. To achieve reliable measurements, however, you must supply accurate heading (gyro) information and ship's position (or speed/course) data to CI-35/35H. After installation, perform the course calibration to offset gyro data. (The calibration should be done by using ground tracking mode.)

1. Confirm that the gyrocompass has settled and all the necessary compensations (latitude compensation, weather compensation, etc.) are made correctly.

2. Manipulate the AD converter (gyro interface) to obtain the same reading as you read on the master gyrocompass. (Do not make adjustment while the ship is turning.)

3. Make sure the navaid (GPS) is working correctly and accurately.

4. Press the TRACKING MODE key to select "GT" (ground tracking) mode.

5. In Menu 4, set 'CRS CAL MODE" to "GT".

6. Run your boat at a speed around 10 kts, keeping the same direction. To minimize the effect of gyro speed error, it is preferable to run along parallels (i.e., eastward or westward).

7. In Menu 4, place the cursor on "START" (CRS CAL EXEC) and then press the EVENT key. As soon as you press the EVENT, "0.0" should appear in reverse text at the upper-right part of the display. After 2 mile-run, the display will show the course calibration angle in normal text.

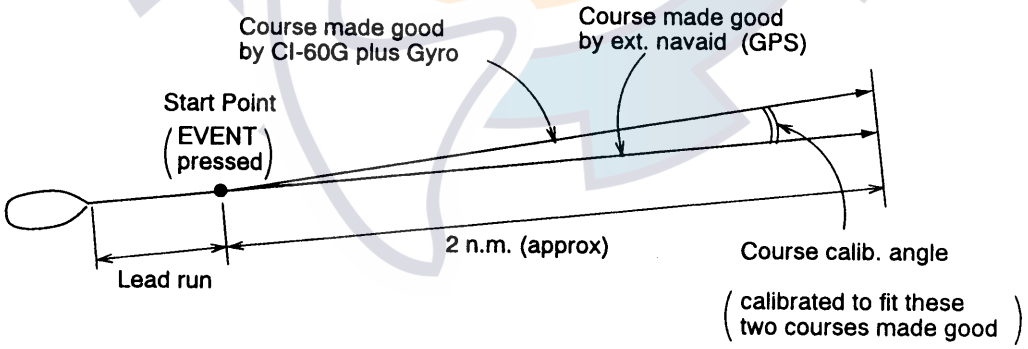

Fig. 4-18

8. Perform the preceding Current Information check, using nav-aided mode, and confirm that current speed/direction display is uniform in all directions and does not change whatever the ship's heading.

Table 1 Ship's Speed Test

SHIP'S NAME__________ TEST SITE__________ SHIP'S LENGTH_______(m) DRAFT Fore______ Aft______ Mean______(m)

DATE	TIME	ENGINE		*1 MILEPOST		Current Indication				EM-LOG (kts)	DEPTH (m)	COURSE (Deg)	WIND (m/s)	SEA COND.	CUR-RENT (kts)	REMARKS
		OUTPUT	RPM	(kts)	TIME(s)	SPEED (kts)	*3 DIST. RUN		*2 ERR. (%)							
							(kts)	TIME(s)								
AVG.																
AVG.																
AVG.																
																MEASURING MODE GROUND WATER
AVG.																
AVG.																

*1 Milepost miles

*2 Error $= \dfrac{\text{Speed measured by milepost} - \text{Current Indicator Speed}}{\text{Speed measured by milepost}} \times 100(\%)$

*3 Current Indicator Speed $= \dfrac{\text{Mile (Milepost)}}{\text{Time (sec)}} \times 3600$

Table 2 Ship's Speed Test

	TIME	SPD (kts)	REMARKS		TIME	SPD (kts)	REMARKS
	00		SHIP'S NAME ______		00		SHIP'S NAME ______
	10		DEPTH ______ (m)		10		DEPTH ______ (m)
	20				20		
	30		TEST SITE ______		30		TEST SITE ______
	40		WIND SPEED		40		WIND SPEED
	50		△ ______ (m/s)		50		△ ______ (m/s)
	00		COURSE ______		00		COURSE ______
	10				10		
	20				20		
	30				30		
	40				40		
	50				50		
	00				00		
	10				10		
	20				20		
	30				30		
	40				40		
	50				50		
	00				00		
	10				10		
	20				20		
	30				30		
	40				40		
	50				50		
	00				00		
	10				10		
	20				20		
	30				30		
	40				40		
	50				50		
	00				00		

Table 3 Current Display Behavior Test

SHIP'S NAME_____ TEST DATE_____ TEST SITE_____ DEPTH SETTING (m): LAYER 1 _____ , LAYER 2 _____ , LAYER 3 _____

No.	TIME	SHIP'S HDG. (deg.)	LAYER 1		LAYER 2		LAYER 3		SHIP'S SPD		WIND (Rel)		REMARKS (Depth, Sea conditions, etc.)
			DIR	SPD (kts)	DIR	SPD (kts)	DIR	SPD (kts)	F/A (kts)	L/R (kts)	DIR (deg)	SPD (m/s)	
1													
2													
3													
4													
5													
6													
7													
8													
9													
10													
1													
2													
3													
4													
5													
6													
7													
8													
9													
10													

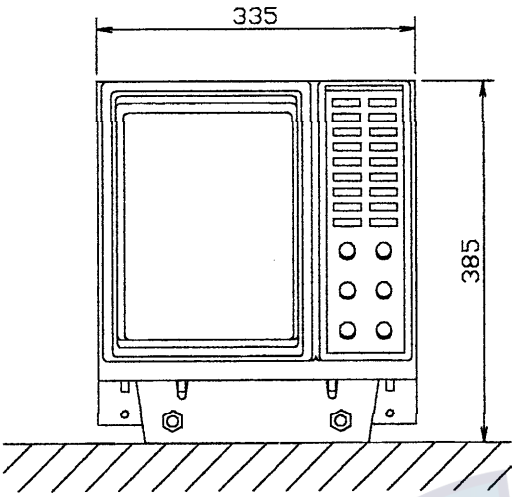

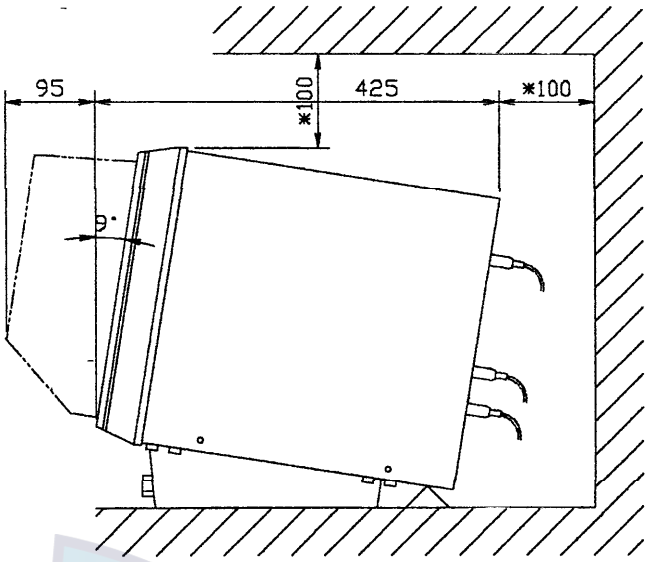

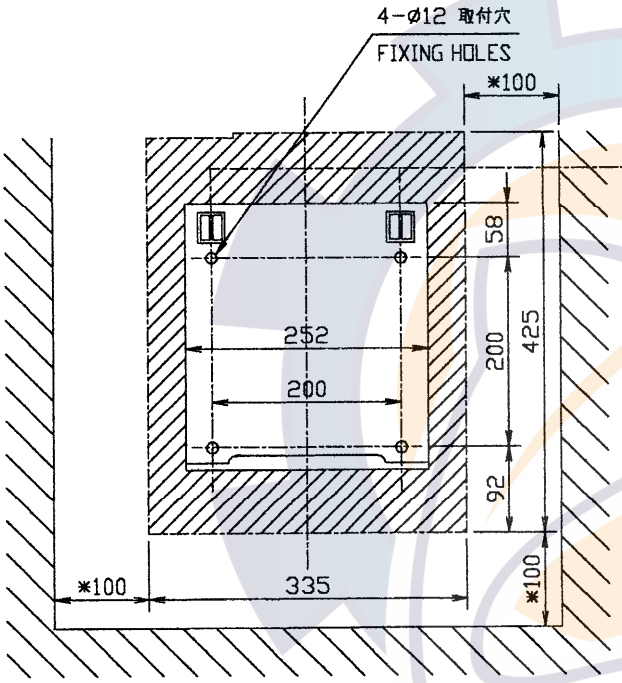

取付寸法
MOUNTING DIMENSION

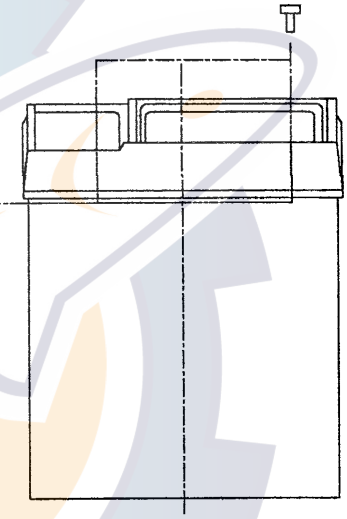

上面図
TOP VIEW

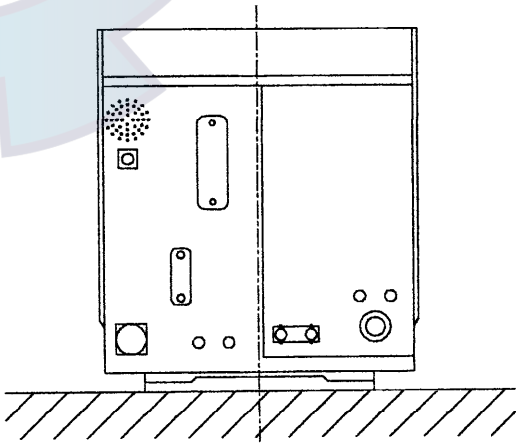

後面図
REAR VIEW

*：推奨サービス空間
RECOMMENDED SERVICE CLEARANCE

注：指定なき公差は1.5%
TOLERANCE IS 1.5% UNLESS OTHERWISE SPECIFIED.

DRAWN Jun. 27 '01 T.YAMASAKI			TITLE CI-3500
CHECKED Jun. 27 '01 Y.KIMURA			名称 指示器
APPROVED Jun. 27 '01 Y.KIMURA			外寸図
SCALE 1/8	MASS 20±1 ±10% kg		NAME DISPLAY UNIT
DWG.No. C7242-G01-C			OUTLINE DRAWING

FURUNO ELECTRIC CO., LTD.

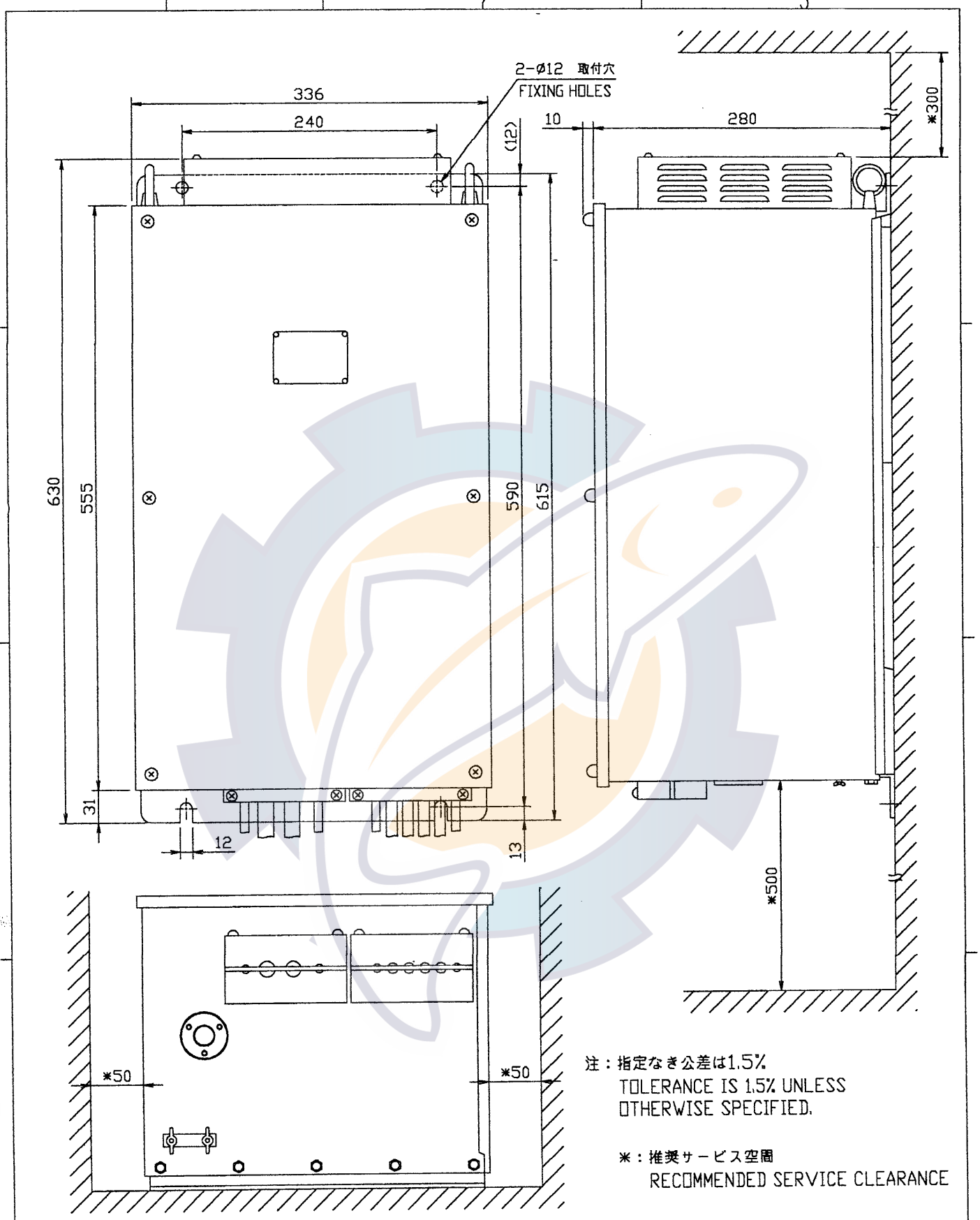

注：指定なき公差は1.5%
TOLERANCE IS 1.5% UNLESS OTHERWISE SPECIFIED.

*：推奨サービス空間
RECOMMENDED SERVICE CLEARANCE

品番 ITEM	品名 NAME	材質 MATERIAL	数量 Q'TY	図番 DWG.NO.	摘要 REMARKS

DRAWN Jun. 27 '01	T.YAMASAKI	TITLE	CI-3510
CHECKED Jun. 27 '01	Y.KIMURA	名称	送受信演算部
APPROVED Jun. 27 '01	Y.KIMURA		外寸図
SCALE 1/5	MASS 32±1 ±10% kg	NAME	TRANSCEIVER UNIT
DWG.No.	C7242-G02-C		OUTLINE DRAWING

FURUNO ELECTRIC CO., LTD.

FURUNO

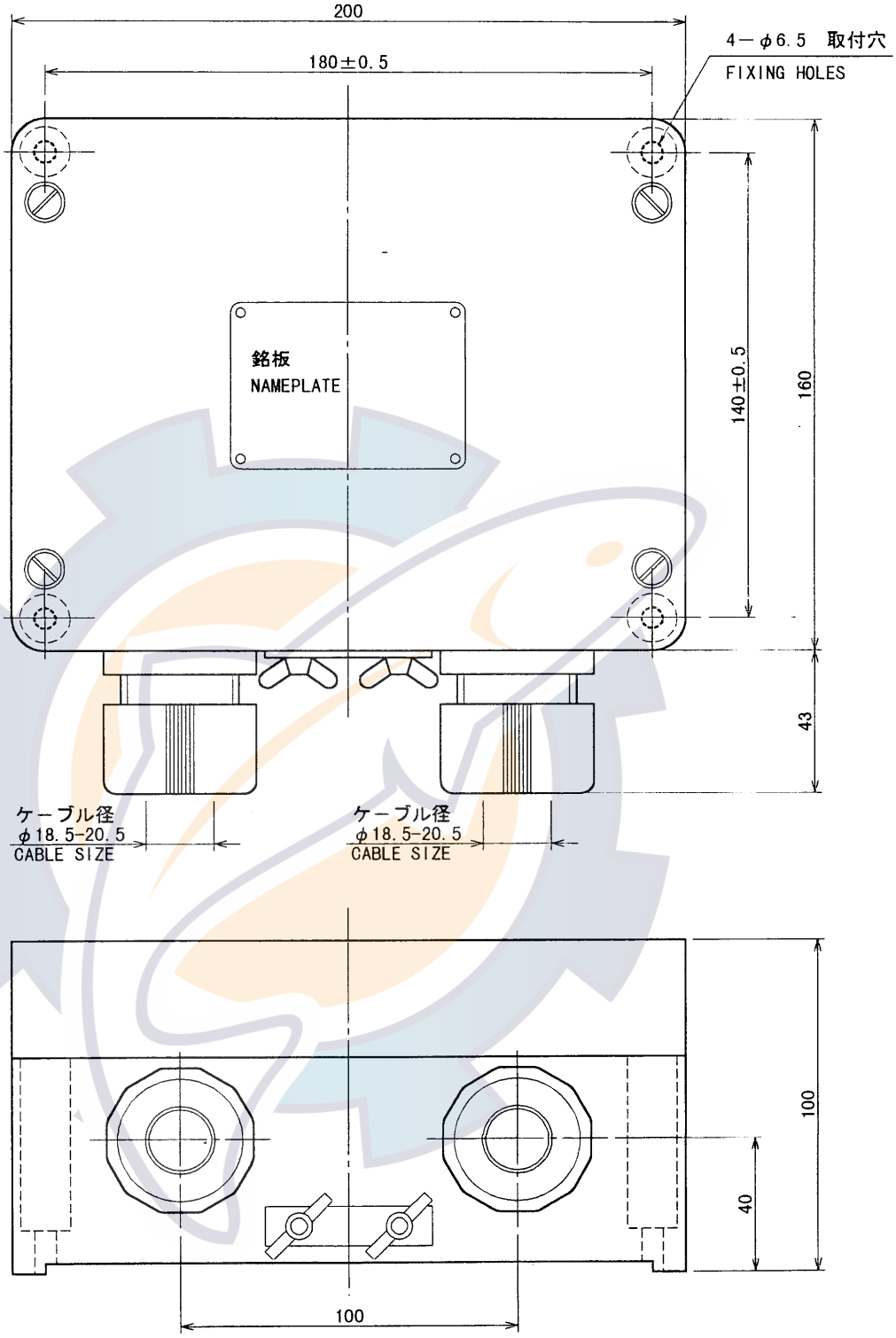

表1 TABLE 1

寸法区分(mm) DIMENSION	公差(mm) TOLERANCE
0 ＜ L ≦ 50	±1.5
50 ＜ L ≦ 100	±2.5
100 ＜ L ≦ 500	±3

注記 指定なき寸法公差は表1による。

NOTE TABLE 1 INDICATES TOLERANCE OF DIMENSIONS.

DRAWN Apr.17'00 T.YAMASAKI		TITLE	CI-630
CHECKED Apr 17 '00 Y.K	DS-50	名称	接続箱
APPROVED Apr.17 '00 Y.K	CI-80 CI-60/60G		外寸図
SCALE 1/2 / MASS 2 kg ±10%		NAME	JUNCTION BOX
DWG. No. C7228-G03- D			OUTLINE DRAWING

FURUNO ELECTRIC CO., LTD.

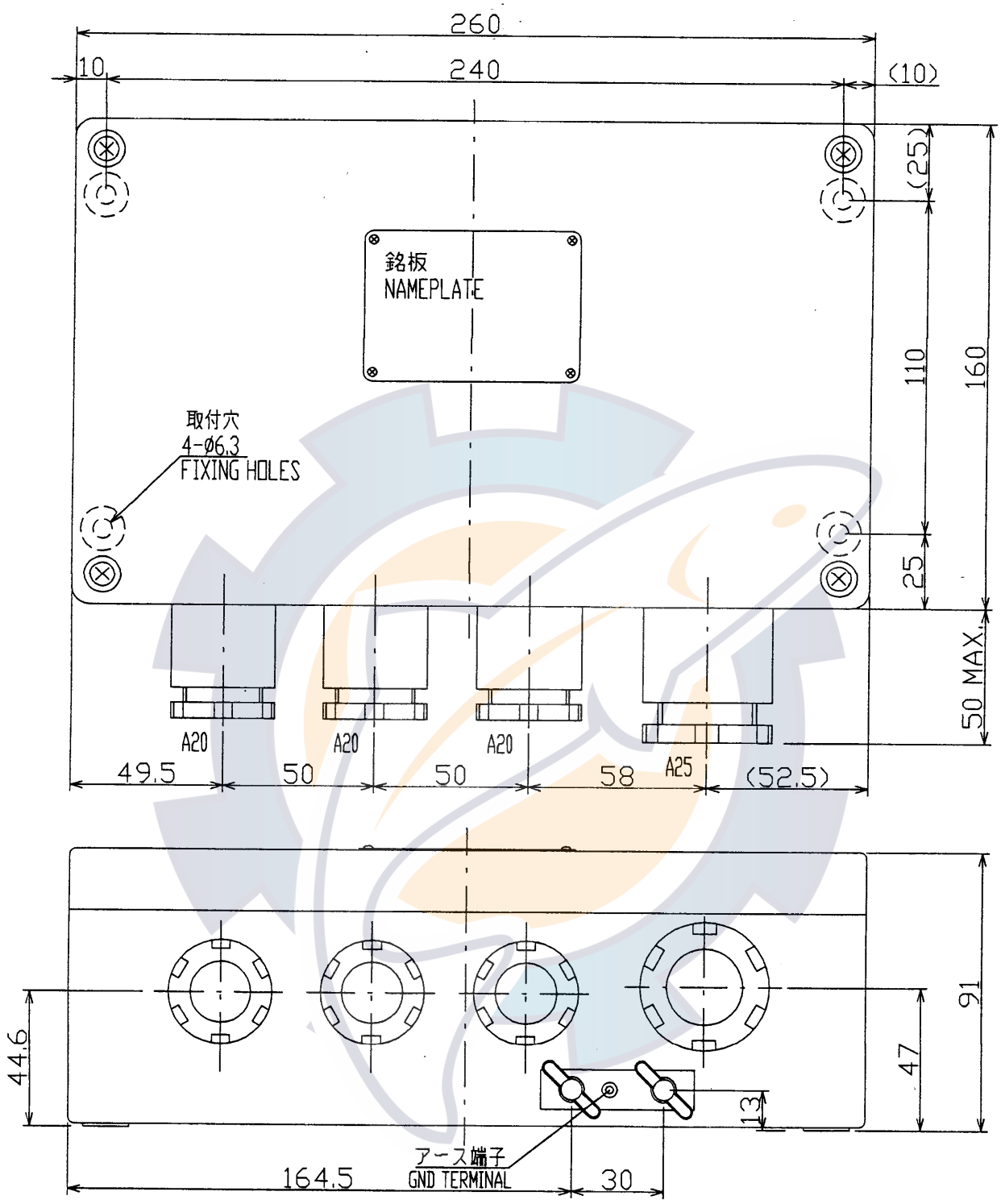

注記
指定なき寸法公差は表1による。
NOTE
TABLE 1 INDICATES TOLERANCE OF DIMENSIONS.

表1 TABLE 1

寸法区分(mm) DIMENSION	公差(mm) TOLERANCE
L ≦ 120	±3.0
120 < L ≦ 250	±3.5
250 < L ≦ 400	±4.5
250 < L ≦ 400	±5.5

DRAWN May 30 '02 T.YAMASAKI		TITLE	CI-3540
CHECKED May 30 '02 Y.KIMURA		名称	マッチングボックス
APPROVED May 30 '02 Y.Kiura	CI-35/35H		外寸図
SCALE 1/2	MASS 3.3 ±10% kg	NAME	MATCHING BOX
DWG.No. C7242-G07-C	66-025-5000-G1		OUTLINE DRAWING

FURUNO ELECTRIC CO., LTD.

FURUNO

D－4

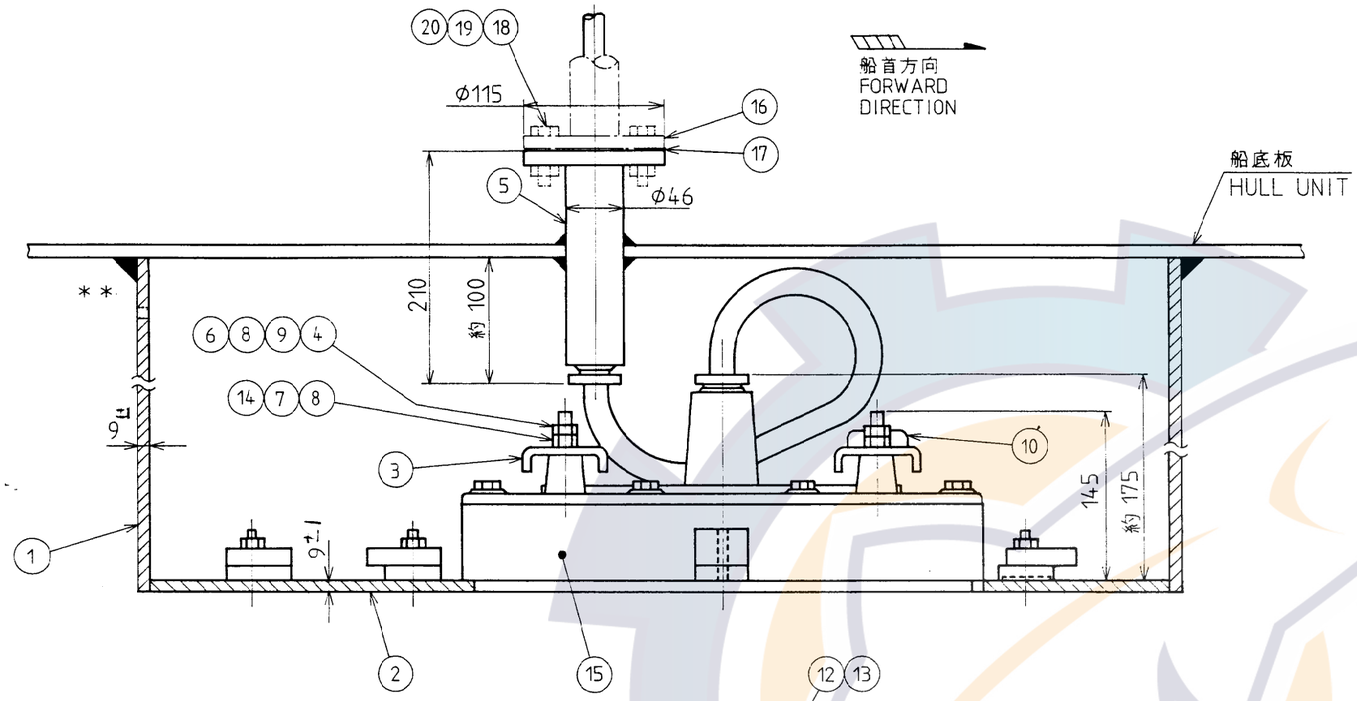

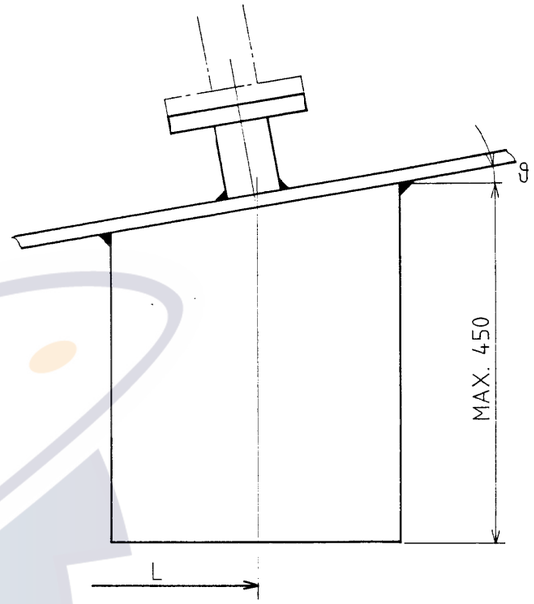

要目表 PRINCIPAL ITEMS		
位置 POSITION	船首から FROM BOW	m
	キールから FROM KEEL	mm
突出量H PROJECTION		mm
取付状態 FIXING CONDITION		走行時水平 HORIZONTAL AT RUNNING
保護タンク PROTECTION TANK		

注：指定なき公差は1.5%
TOLERANCE IS 1.5% UNLESS OTHERWISE SPECIFIED.

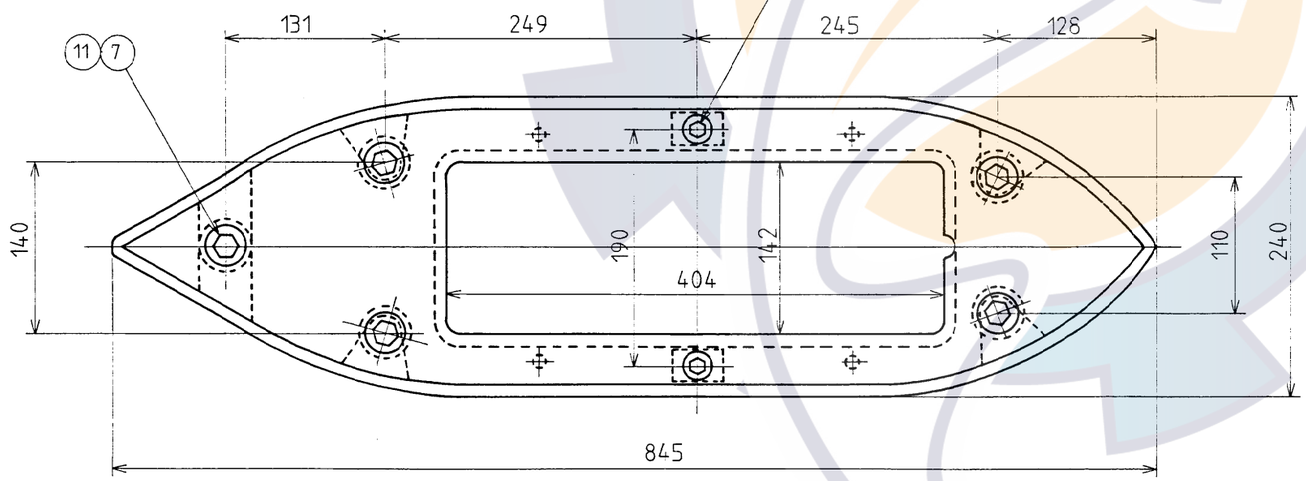

品番 ITEM	品名 NAME	材質 MATERIAL	数量 Q'TY	図番 DWG.NO.	摘要 REMARKS
20	六角ナット HEX. NUT		4	M12	〃
19	バネ座金 SPRING WASHER		4	M12	
18	六角ボルト HEX. BOLT		4	M12×40～50	
17	パッキン GASKET		1		
16	呼び圧力5K差込溶接式フランジ *9	SS41	1	JISB2220 呼び径32	造船所手配 SHIPYARD SUPPLY
15	送受波器 TRANSDUCER		1	標準10mケーブル付 ID; W/10m CABLE	〃
14	六角ボルト HEX. BOLT	SUS304	4	M12×25	
13	六角ボルト HEX. BOLT	SUS304	2	M8×40	
12	バネ座金 SPRING WASHER	SUS304	2	M8	
11	六角ボルト HEX. BOLT	SUS304	5	M12×40	
10	防蝕亜鉛 ZINC BLOCK	ZAP	1	B-1 1/2	
9	平ワッシャ FLAT WASHER	ジュラコン RESIN	4	T-201-11	
8	平座金 FLAT WASHER	SUS304	4	M12	
7	バネ座金 SPRING WASHER	SUS304	9	M12	
6	六角ナット HEX. NUT	SUS304	8	M12	
5	電線貫通金物 THRU-HULL PIPE	SS400	1	CI-620-K-S	
4	スペーサ SPACER	SGP	4	66-017-1204	
3	押え板 FIXING PLATE	SGP	2	66-017-1203	
2	送受波器取付フランジ FIXING FLANGE	SGP	1	66-017-1202	
1	送受波器ケース CASING	SS41	1	66-017-1201	古野手配 MAKER SUPPLY

注

1. ※：造船所支給
2. 送受波器ケースはθ（船底傾斜角）に合わせて切断してください。
3. 切断・溶接の際は、歪防止のため送受波器を取り外した状態で"送受波器取付フランジ"を必ず取り付けておいてください。
4. ※※：船尾側上端に通水孔（φ10～φ20程度）を開けてください。
5. 電線貫通金物はフレーム等の邪魔にならない所で送受波器に当らず、キャップナットが容易に締付けられる位置に取付けてください。
6. 網除け、保護タンクは必要に応じて造船所にて製作して下さい。
7. 送受波器面は塗装しないように注意してください。
8. 送受波器ケース取付の際には船首、船尾の確認をしてください。
9. 質量は古野手配分のみで、タンク高さ４５０の場合を示す。

NOTE

1. ※：SHIPYARD SUPPLY.
2. CUT CASING FORθ (RISING ANGLE OF SHIP'S HULL.)
3. TO AVOID DISTORTION BY HEAT, PUT "FIXING FLANGE" (WITHOUT TRANSDUCER) ONTO CASING WHILE CUTTING AND/OR WELDING.
4. ※※：MAKE A HOLE OF 10 TO 20MM IN DIA. ON STERN SIDE TO ALLOW WATER TO PENETRATE.
5. ALLOW ENOUGH CLEARANCE AROUND THRU-HULL PIPE FOR EASY TIGHTENING AND SERVICING.
6. IF NECESSARY, HAVE SHIPYARD PROVIDE NET PROTECTOR AND PROTECTION TANK.
7. DO NOT PAINT TRANSDUCER FACE.
8. CONFIRM FORWARD DIRECTION OF TRANSDUCER.

*9. STEEL WELDING PIPE FLANGE: JIS B 2220-5K·10·SS41

承認 APPROVED	APR.24.'90 T.NAKANO	三角法 THIRD ANGLE PROJECTION		名称 TITLE	CI-620-T-S 送受波器装備図（鋼船） TRANSDUCER INSTALLATION (STEEL HULL)
検図 CHECKED	APR.23.'90 M.IKEDA	尺度 SCALE	1/5		
製図 DRAWN	APR.23.'90 TAKAHASHI	質量 MASS	94 kg	図番 DWG.NO.	C7228-T02-F

FURUNO ELECTRIC CO., LTD.

FURUNO

D - 5

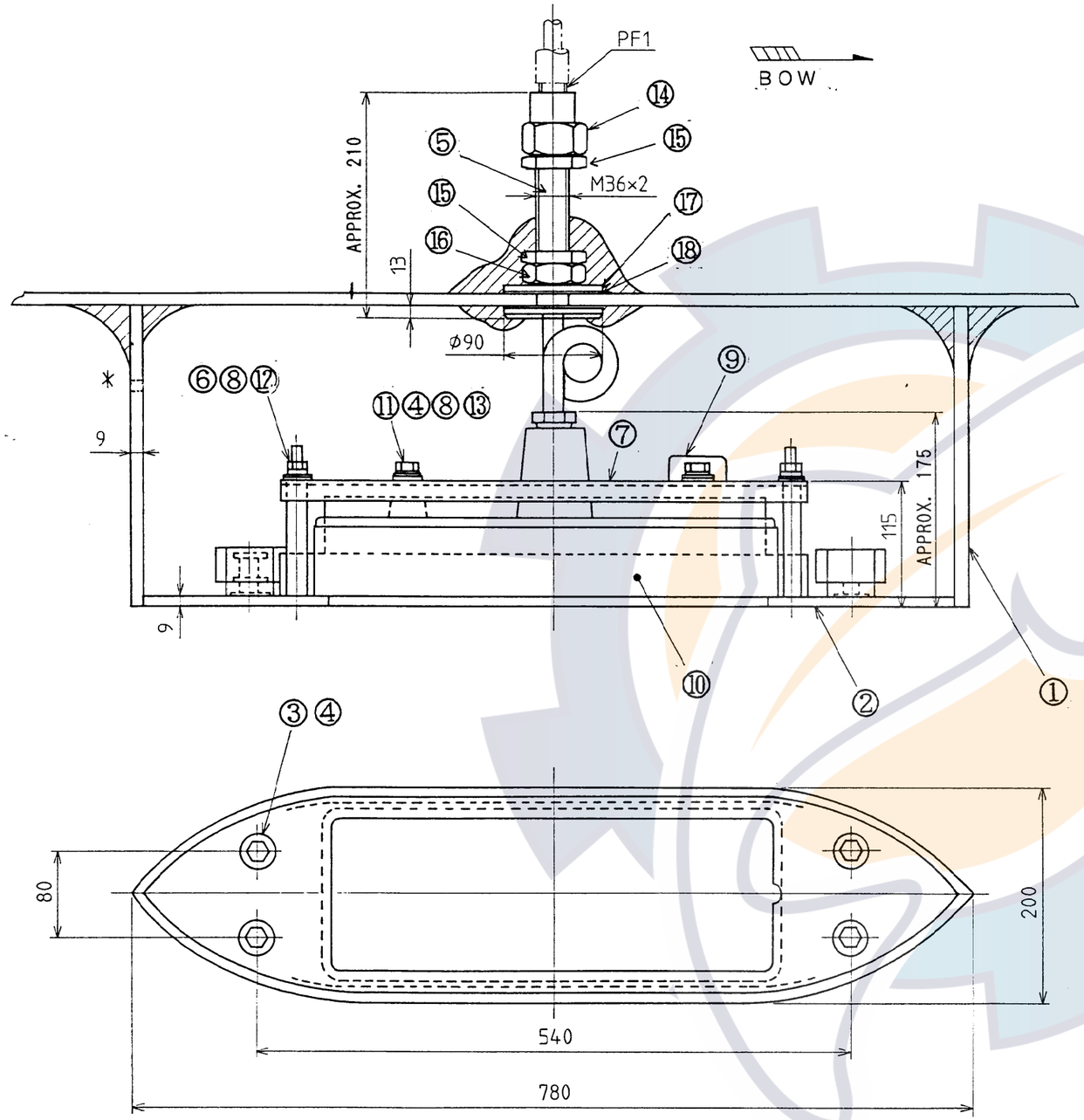

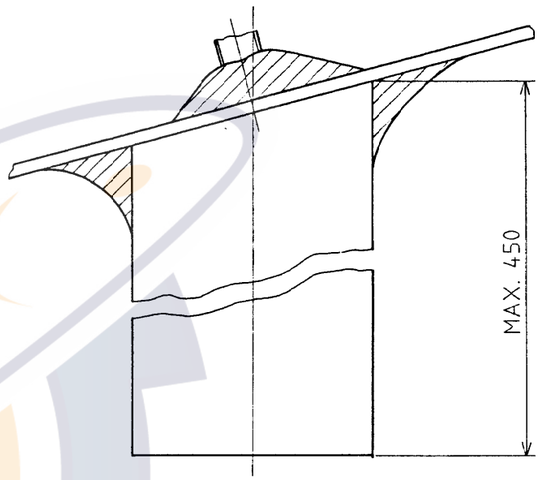

PRINCIPAL ITEM		
POSITION	FROM BOW	m
	FROM KEEL	mm
PROJECTION		mm
FIXING CONDITION	HORIZONTAL AT RUNNING	
PROTECTION TANK		

ITEM 品番	NAME 品名	MATERIAL 材質	Q'TY 数量	DWG. NO. 図番	REMARKS 摘要
18	GASKET	RUBBER	1	TPB-1003	
17	WASHER	SS41	1	TPB-1002-1	
16	FIXING NUT	SS400	1	TPB-1-03	
15	LOCK NUT	SS400	2	TPB-1-04	
14	CAP NUT	SS400	1	66-017-1506-1	
13	FLAT WASHER	PC	4		
12	FLAT WASHER	RESIN	4		
11	HEX. BOLT	SUS304	4		M12x25
10	TRANSDUCER		1		STD; WITH 10m CABLE
9	ZINC BLOCK		1		
8	FLAT WASHER	SUS304	8		
7	FIXING PLATE	SS400	1		
6	HEX. NUT	SUS304	8		M12
5	THRU-HULL PIPE	BC2	1	66-017-1501-0	
4	SPRING WASHER	BC2	8		M12
3	HEX. BOLT	SUS304	4		M12×40
2	FIXING FLANGE	SS400	1		
1	CASING	FRP	1		

NOTE

1. DECIDE PRINCIPAL ITEMS UPON DISCUSSING WITH SHIP'S OWNER OR SHIPYARD.
2. CUT CASING FOR θ (RING ANGLE OF SHIP'S HULL).
3. ALLOW ENOUGH CLEARANCE AROUND THRU-HULL PIPE FOR EASY TIGHTENING AND SERVICING.
4. FRP MOLD THRU-HULL PIPE ON BOTH SIDES OF HULL PLATE.
5. DO NOT PAINT TRANSDUCER FACE.
6. FRP MOLD INSIDE OF CASING.
7. BEFORE FIXING CASING TO HULL PLATE, FIRST CLEAN HULL PLATE SURFACE WITH A SANDER UNTIL FIBER GLASS APPEARS ON FACE, THEN REMOVE DUSTS, OILS AND SO ON FROM SURFACE.
8. * MAKE A HOLE OF 10 TO 20MM DIA. ON STERN SIDE TO ALLOW WATER TO PENETRATE.

承認 APPROVED	APR.24.'90 T.NAKANO	三角法 THIRD ANGLE PROJECTION		名称 TITLE CI-620-T-F TRANSDUCER INSTALLATION (FOR FRP)
検図 CHECKED	APR.23.'90 M. IKEDA	尺度 SCALE	1/5	
製図 DRAWN	APR.23.'90 TAKAHASHI	重量 WEIGHT	41 kg	図番 DWG. NO. E7228-T01-B

FURUNO ELECTRIC CO., LTD.

FURUNO

D - 5A

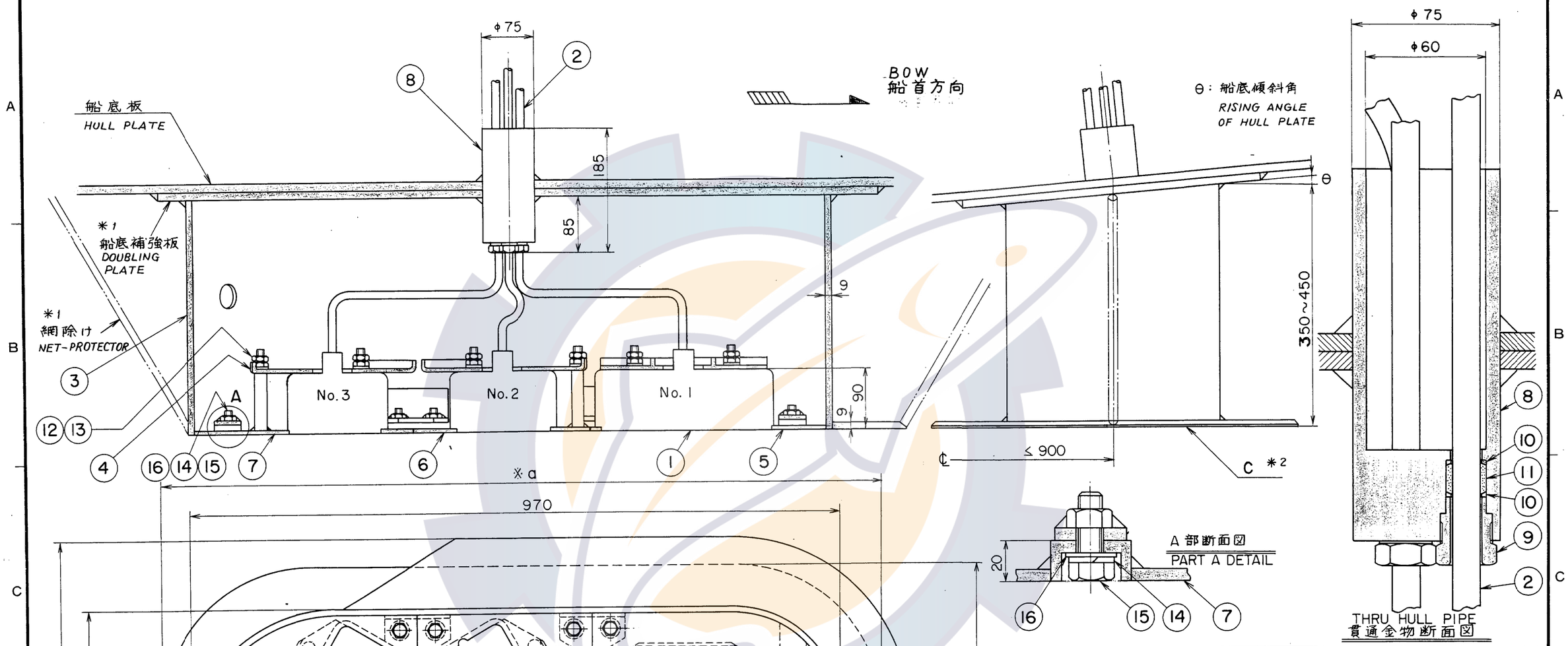

ITEM 品番	NAME 品名		MATERIAL 材質	Q'TY 数量	DWG.NO. 図番	REMARKS 摘要
16	平座金	FLAT WASHER	ジュラコン RESIN	12	T-201-11	
15	六角ボルト	HEX. BOLT	〃	12	M12×35	
14	バネ座金	SPRING WASHER	〃	12	FOR M12用	
13	六角ナット	HEX. NUT	〃	24	M12 class 2	
12	平座金	FLAT WASHER	SUS304	12	FOR M12用	
11	防水ゴム	GASKET	CR	3	〃 -1104	
10	押えリング	LINER	〃	6	〃 -1103	
9	締付用ナット	CAP NUT	SUS304	3	〃 -1102	
8	貫通金物用体	THRU-HULL PIPE	〃	1	〃 -1101	
7	〃 (3)	FIXING FLANGE (3)	〃	1	〃 -1030	
6	〃 (2)	FIXING FLANGE (2)	〃	1	〃 -1020	
5	取付板(1)	FIXING FLANGE (1)	〃	1	〃 -1010	
4	押え板	FIXING PLATE	〃	3	〃 -1006-△1	
3	送受波器ケース	CASING	SS41	1	66-004-1000	
2	ケーブル	CABLE		3		
1	送受波器	TRANSDUCER		3		130KHz

＊1 船底補強板及び網除けは造船所手配。
(※a, ※b, 板厚)は造船所で決定して下さい。
＊2 C面は走航時水平となること。
＊3 送受波器ケースは船首船尾方向に対して ±1° 以内の誤差で取り付けること。

＊1. DOUBLING PLATE AND NET-PROTECTOR SHOULD BE INSTALLED BY SHIPYARD (DIMENSIONS SHOULD BE DECIDED BY SHIPYARD).
＊2. INSTALL THE CASING SO THAT THE SURFACE C BECOMES HORIZONTAL AT NORMAL TRIM.
＊3. ERROR IN FORE-AFT DIRECTION SHOULD BE WITHIN ±1°.

承認 APPROVED	JUL・24・78	三角法 THIRD ANGLE PROJECTION	名称 TITLE CI-241 送受波器装備図 TRANSDUCER INSTALLATION
検図 CHECKED	MAY・19・78	尺度 SCALE 1/6	
製図 DRAWN	MAY・19・78	重量 WEIGHT 140 kg	図番 DWG.NO. C7215-007-G

FURUNO ELECTRIC CO., LTD.

FURUNO

D - 5β

NOTE
1. DECIDE PRINCIPAL ITEMS UPON DISCUSSING WITH SHIP'S OWNER OR SHIPYARD.
2. CUT CASING FOR θ (RISING ANGLE OF SHIP'S HULL).
3. ALLOW ENOUGH CLEARANCE AROUND THRU-HULL PIPE FOR EASY TIGHTENING AND SERVICING.
4. FRP MOLD THRU-HULL PIPE ON BOTH SIDES OF HULL PLATE.
5. DO NOT PAINT TRANSDUCER FACE.
6. FRP MOLD INSIDE OF CASING.

PRINCIPAL ITEM		
POSITION	FROM BOW	m
	FROM KEEL	mm
PROJECTING		mm
FIXING CONDITION	HORIZONTAL AT RUNNING	
PROTECTION TANK		

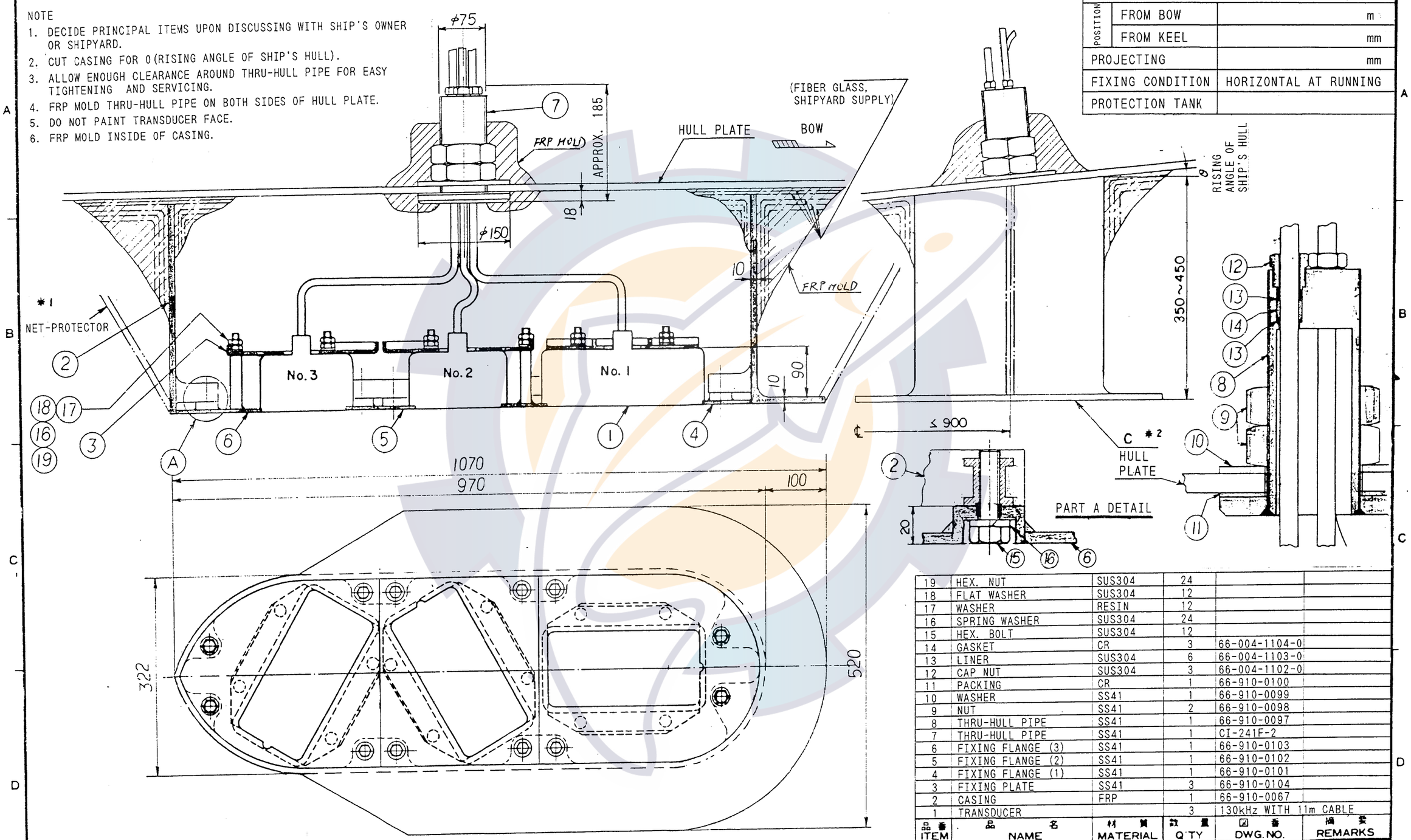

ITEM 品番	NAME 品名	MATERIAL 材質	Q'TY 数量	DWG.NO. 図番	REMARKS 摘要
19	HEX. NUT	SUS304	24		
18	FLAT WASHER	SUS304	12		
17	WASHER	RESIN	12		
16	SPRING WASHER	SUS304	24		
15	HEX. BOLT	SUS304	12		
14	GASKET	CR	3	66-004-1104-0	
13	LINER	SUS304	6	66-004-1103-0	
12	CAP NUT	SUS304	3	66-004-1102-0	
11	PACKING	CR	1	66-910-0100	
10	WASHER	SS41	1	66-910-0099	
9	NUT	SS41	2	66-910-0098	
8	THRU-HULL PIPE	SS41	1	66-910-0097	
7	THRU-HULL PIPE	SS41	1	CI-241F-2	
6	FIXING FLANGE (3)	SS41	1	66-910-0103	
5	FIXING FLANGE (2)	SS41	1	66-910-0102	
4	FIXING FLANGE (1)	SS41	1	66-910-0101	
3	FIXING PLATE	SS41	3	66-910-0104	
2	CASING	FRP	1	66-910-0067	
1	TRANSDUCER		3	130kHz WITH 11m CABLE	

7. BEFORE FIXING CASING TO HULL PLATE, FIRST CLEAN HULL PLATE SURFACE WITH A SANDER UNTIL FIBER GLASS APPEARS ON FACE, THEN REMOVE DUSTS, OILS AND SO ON FROM SURFACE.

承認 APPROVED	S. Fukui	三角法 THIRD ANGLE PROJECTION		名称 TITLE TYPE	CI-241F TRANSDUCER INSTALLATION (FOR FRP)
検図 CHECKED	O. Suda	R度 SCALE	1/6		
製図 DRAWN	'82. 11. 5 K. Tatano	重量 WEIGHT	70 kg	図番 DWG.NO.	E7215-033-B

FURUNO ELECTRIC CO., LTD.

FURUNO

D - 5C

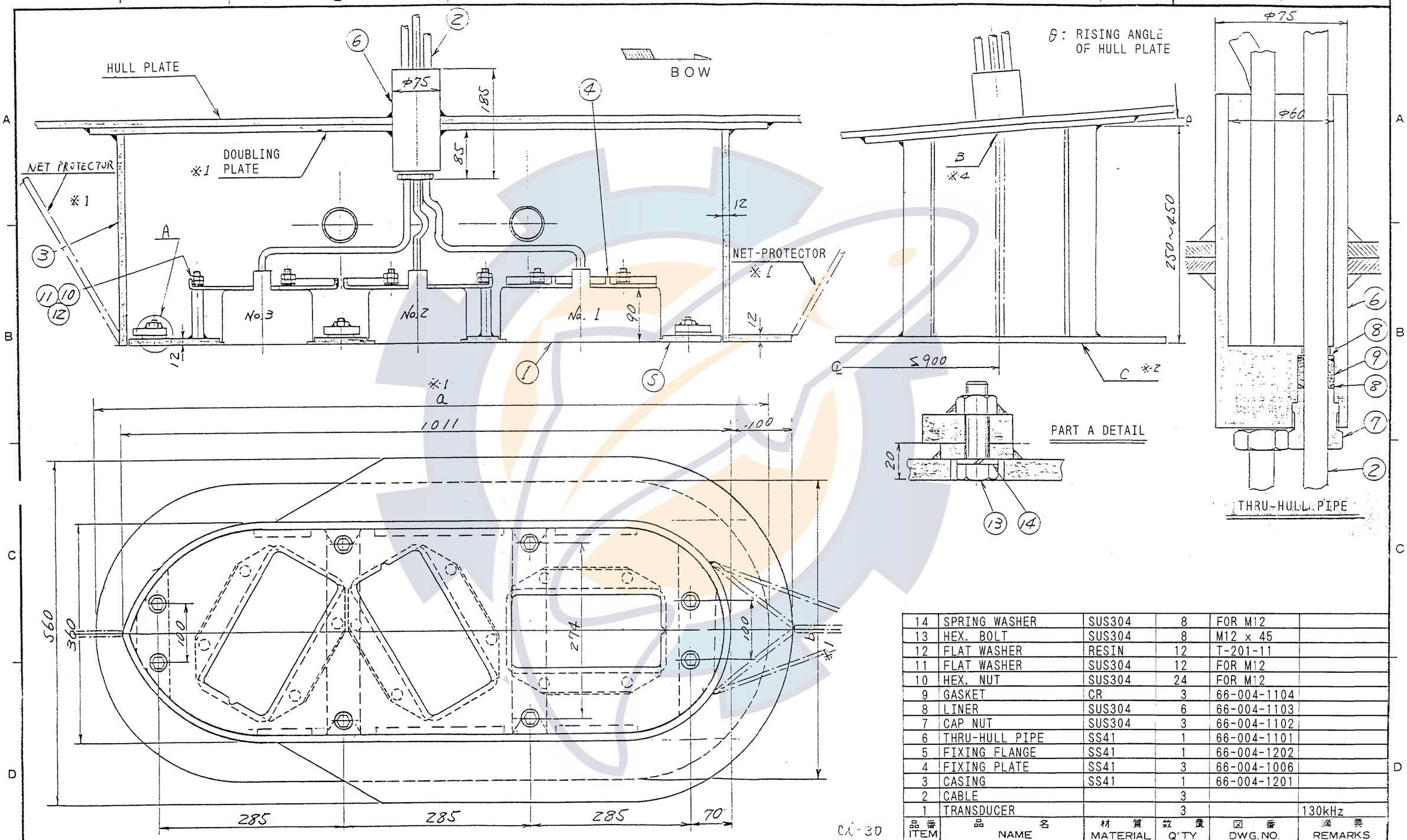

ITEM 品番	NAME 品名	MATERIAL 材質	Q'TY 数量	DWG.NO. 図番	REMARKS 摘要
14	SPRING WASHER	SUS304	8	FOR M12	
13	HEX. BOLT	SUS304	8	M12 x 45	
12	FLAT WASHER	RESIN	12	T-201-11	
11	FLAT WASHER	SUS304	12	FOR M12	
10	HEX. NUT	SUS304	24	FOR M12	
9	GASKET	CR	3	66-004-1104	
8	LINER	SUS304	6	66-004-1103	
7	CAP NUT	SUS304	3	66-004-1102	
6	THRU-HULL PIPE	SS41	1	66-004-1101	
5	FIXING FLANGE	SS41	1	66-004-1202	
4	FIXING PLATE	SS41	3	66-004-1006	
3	CASING	SS41	1	66-004-1201	
2	CABLE		3		
1	TRANSDUCER		3		130kHz

CI-30

＊1 DOUBLING PLATE AND NET-PROTECTOR SHOULD BE INSTALLED BY SHIPYARD (DIMENSIONS SHOULD BE DECIDED BY SHIPYARD).
＊2 INSTALL THE CASING SO THAT THE SURFACE C BECOMES HORIZONTAL AT NORMAL TRIM.
＊3 ERROR IN FORE-AFT DIRECTION SHOULD BE WITHIN± 1 ° .
＊4 MAKE A HOLE OF 10 TO 20MM DIA. ON STERN SIDE FOR ESCAPING AIR FROM TANK.

承認 APPROVED	1982. 1. 14. S. Takizawa	三角法 THIRD ANGLE PROJECTION		名称 TITLE	CI-241A TRANSDUCER INSTALLATION (REINFORCED TYPE)
検図 CHECKED	S. Sonda	尺度 SCALE	1/6		
製図 DRAWN	1982. 9. 14 K. Tsunouchi	重量 WEIGHT	160 kg	図番 DWG.NO.	E7218-025-B

FURUNO ELECTRIC CO., LTD.

FURUNO

D - 6

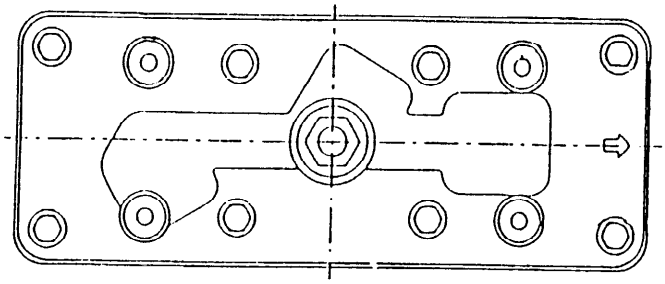

船首方向
FORWARD DIRECTION

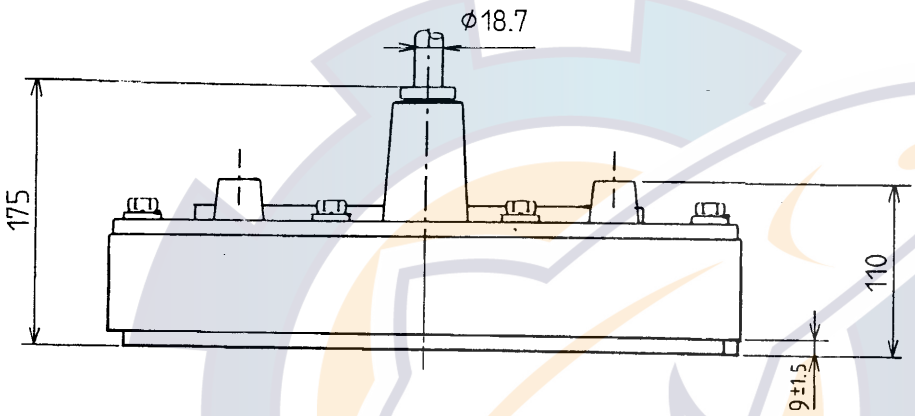

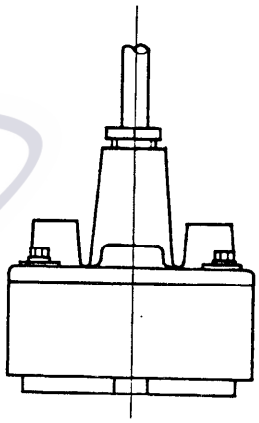

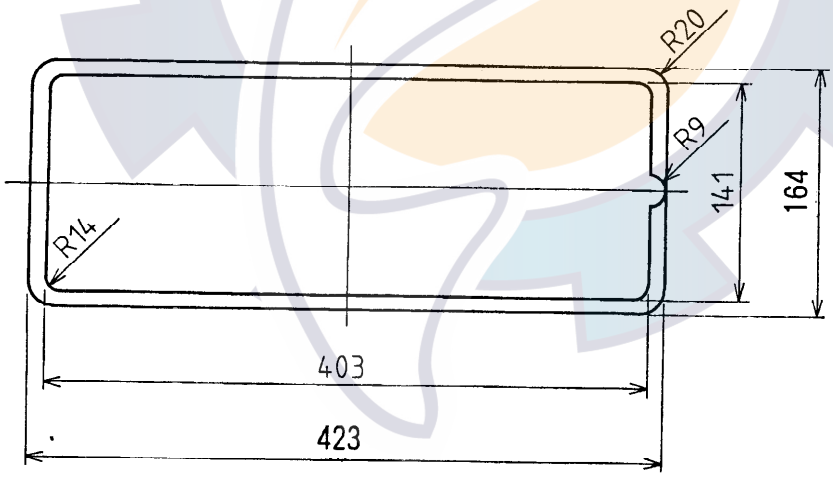

注：指定なき公差は1.5%
TOLERANCE IS 1.5% UNLESS OTHERWISE SPECIFIED.

CI－3520－1：10mケーブル付 WITH 10m CABLE (22kg)
CI－3520－2：20mケーブル付 WITH 20m CABLE (27kg)

DRAWN Aug.2'96 K.Kusunoki			TYPE CI-3520
CHECKED Aug 2,'96 Y. Kimura			名称 送受波器
APPROVED Aug 2'96 K. OTA	CI-35H		外寸図
SCALE 1/5	MASS - kg	APPLICABLE TO: (MODEL)	BLOCK NO.	NAME TRANSDUCER
DWG NO. C7242-G03-C			OUTLINE DRAWING

FURUNO ELECTRIC CO., LTD.

FURUNO

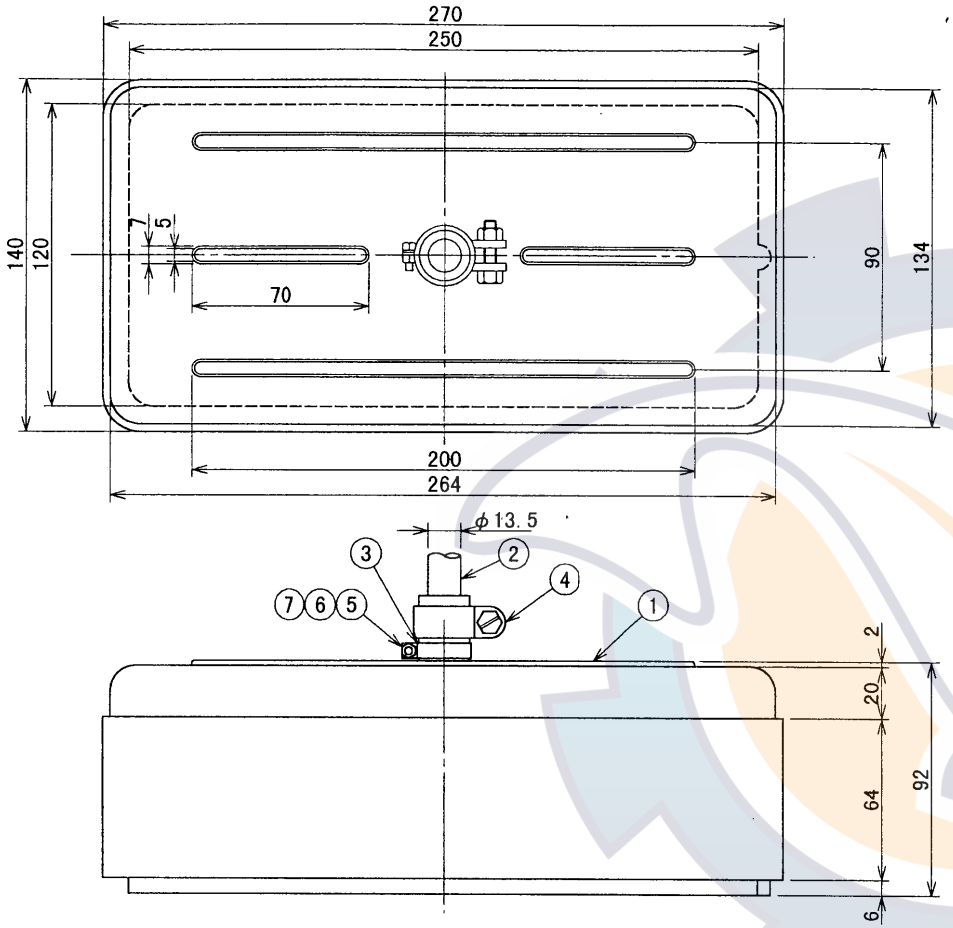

寸法区分(mm) DIMENSION	公差(mm) TOLERANCE
0 < L ≦ 50	±1.5
50 < L ≦ 100	±2.5
100 < L ≦ 500	±3

表1
TABLE 1

品番 ITEM	品名 NAME	材質 MATERIAL	数量 Q'TY	図番 DWG. NO.	摘要 REMARKS
7	六角ナット HEX. NUT	SUS304	1	M3	
6	バネ座金 SPRING WASHER	SUS304	1	M3	
5	ナベ小ネジ PANHEAD SCREW	SUS304	1	M3x8	
4	ジュビリークリップ HOSE CLAMP	SUS304	1		
3	ナンバーリング FIXTURE RING	SUS304	1	66-004-0001	
2	ケーブル CABLE	CR	1	WSG-75045	
1	送受波器 TRANSDUCER		1		

注記
1）指定なき寸法公差は表1による。

NOTE
1. TABLE 1 INDICATES TOLERANCE OF DIMENSIONS.

ケーブル長さ CABLE LENGTH(m)	質量 MASS(kg)
10	8.2
20	10.4
30	12.6

DRAWN Sep30'99 T.YAMASAKI	TITLE	CI-240
CHECKED Sep30'99 K.Kusunoki	名称	送受波器
APPROVED Sep30'99 K.Furuno		外寸図
SCALE 1/3 MASS kg	NAME	TRANSDUCER
DWG. No. C7215-G01- B		OUTLINE DRAWING

FURUNO ELECTRIC CO., LTD.

D-6A

FURUNO

D - 7

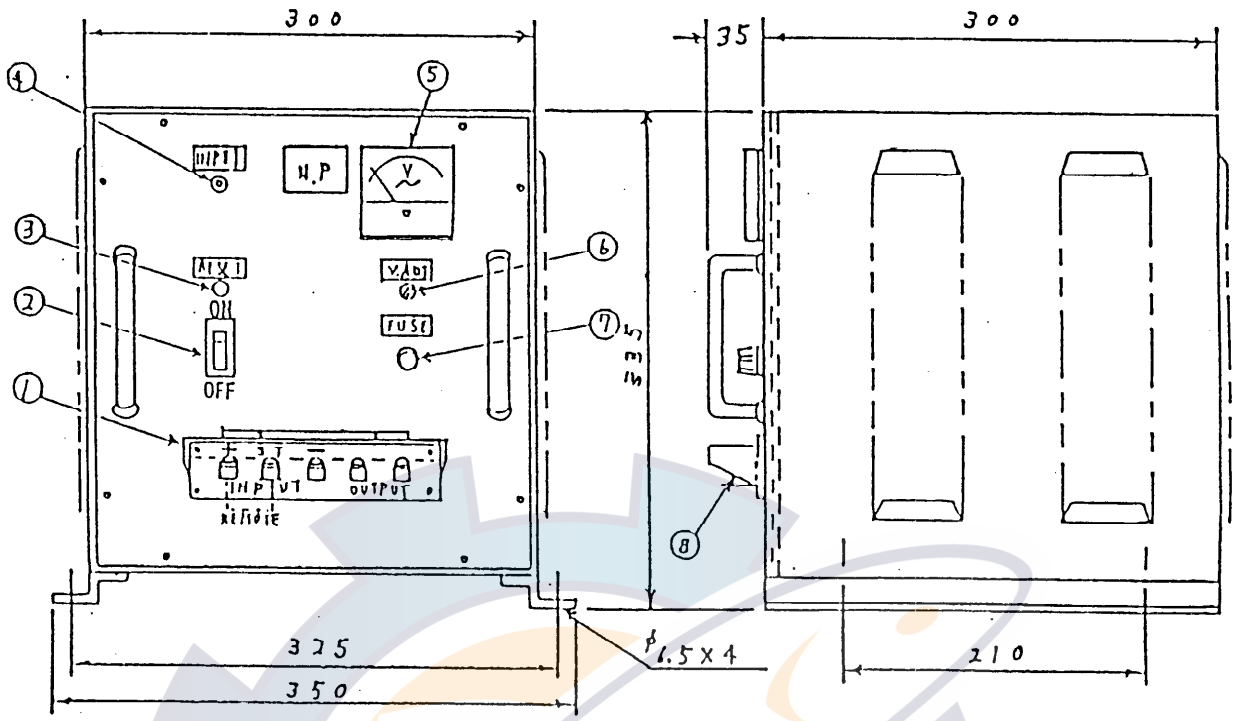

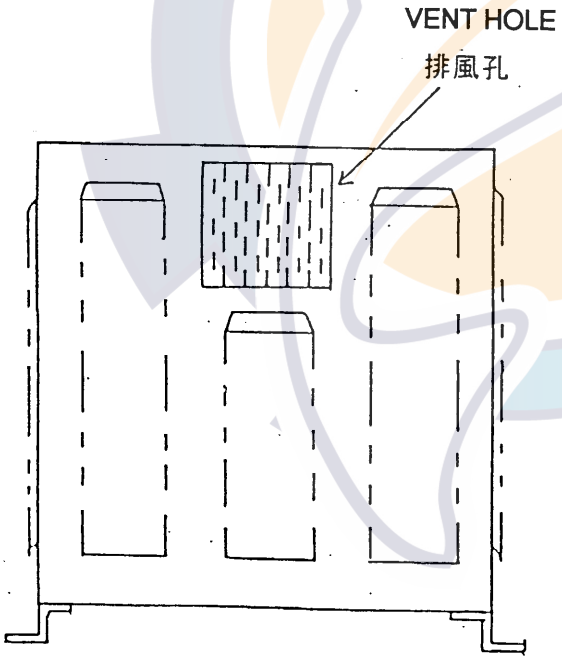

No.	PART
1	INPUT／OUTPUT TERMINAL
2	BREAKER
3	RESET BUTTON
4	LED (POWER)
5	VOLTAGE METER
6	OUTPUT VOLTAGE ADJUSTER
7	FUSE (FOR OUTPUT)
8	TERMINAL COVER

番号	部 品 名 称
1	入出力端子板
2	入力用ブレーカ兼用スイッチ
3	過電圧防止用リセットスイッチ
4	入力表示灯（発光ダイオード）
5	出力電圧計
6	出力電圧調整用ボリューム
7	出力用ヒューズ
8	端子カバー

DRAWN July 19. '95 T. Yamasaki			TYPE TR-2450
CHECKED July 19. '95 Maki			名称 DC－ACインバータ
APPROVED July 19. '95 Okamoto			NAME DC-AC INVERTER
SCALE 1/5	MASS 35 kg	APPLICABLE TO: (MODEL)	BLOCK NO.	DWG NO. C2007-G01- B

FURUNO ELECTRIC CO., LTD.

FURUNO

D - 8

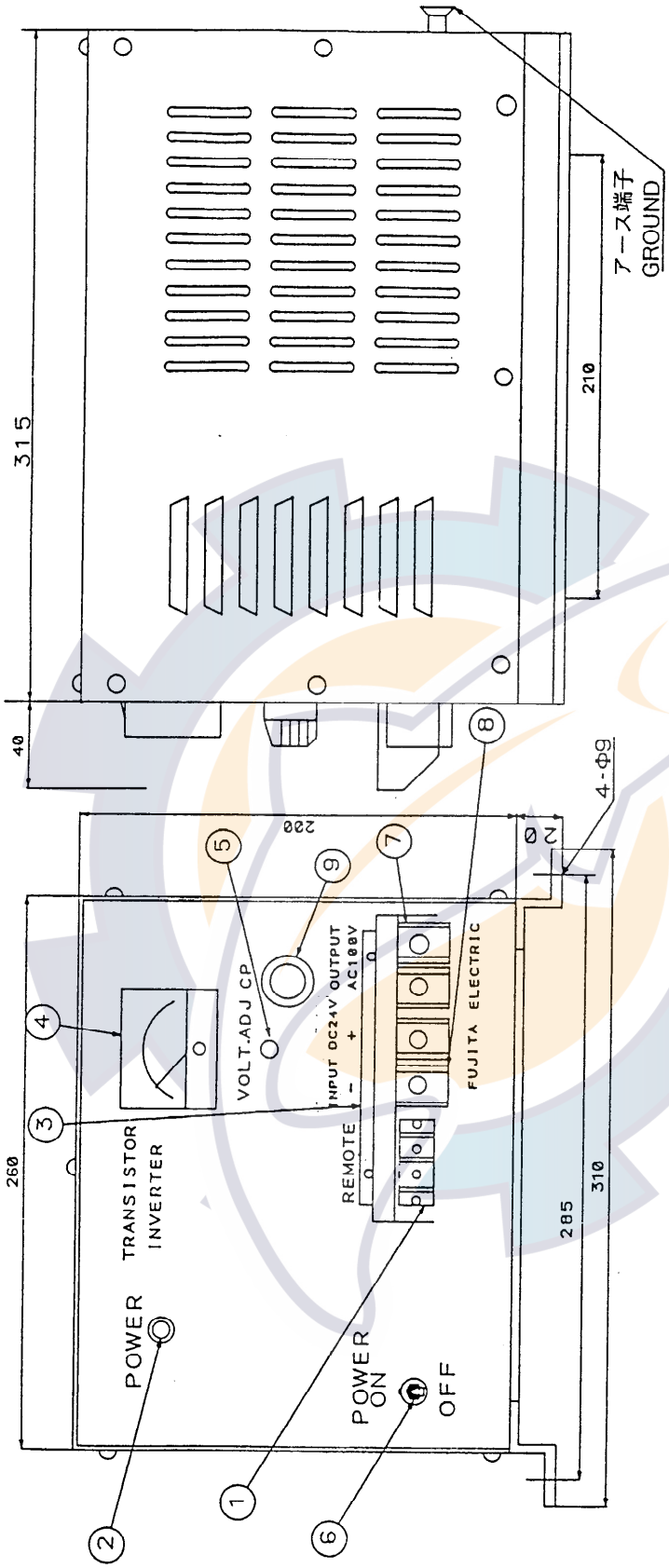

9	サーキットプロテクタ CIRCUIT BREAKER
8	入力端子 INPUT TERMINAL
7	出力端子 OUTPUT TERMINAL
6	スイッチ SWITCH
5	ボリューム POTENTIOMETER
4	交流電圧計 AC VOLTMETER
3	端子カバー TERMINAL COVER
2	発光ダイオード LED
1	リモート端子 REMOTE TERMINAL

品番 ITEM	品名 NAME	材質 MATERIAL	数量 Q'TY	図番 DWG.NO.	摘要 REMARKS

承認 APPROVED	JUN・15・'90 T.NAKANO	三角法 THIRD ANGLE PROJECTION		名称 TITLE	DC/AC インバーター CSH-5050 DC/AC INVERTER
検図 CHECKED	Jun・12・90 T. Iguchi	尺度 SCALE	/		
製図 DRAWN	JUN 12・'90 M. USUDA	重量 WEIGHT	21 kg	図番 DWG.NO.	C1273 – G08 – A

FURUNO ELECTRIC CO., LTD.

FURUNO

S－1

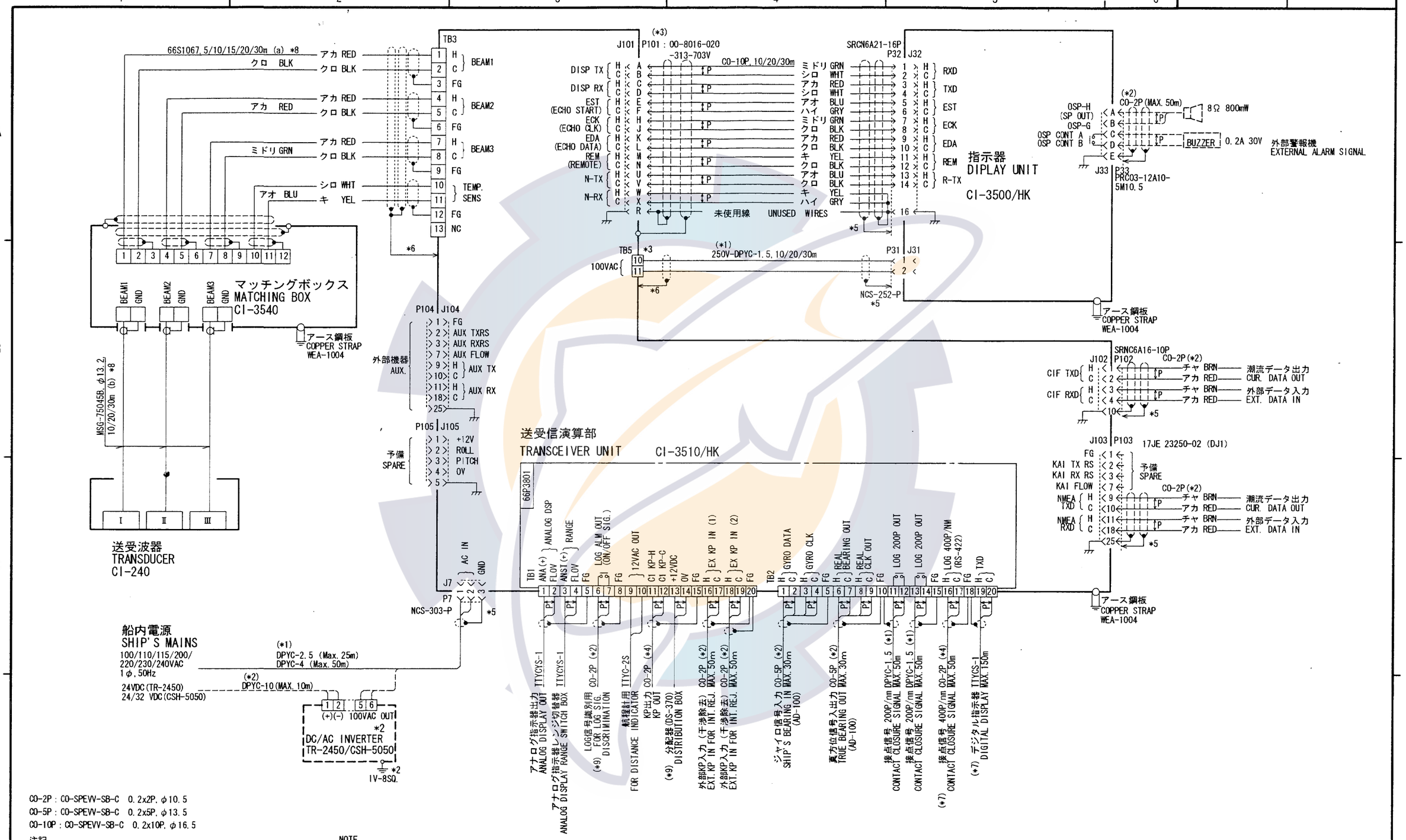

注記

(*1) : 造船所支給。
(*2) : オプション支給。
(*3) : 出荷時コネクタプラグ接続済。
(*4) : 接続機器側が支給。
(*5) : コネクタクランプでアースに落とす。
(*6) : ケーブルクランプでアースに落とす。
(*7) : 分配器 (DS-370) 接続時は、4系統接続すること。
(*8) : a+b≦50m

NOTE

(*1) : SHIPYARD SUPPLY.
(*2) : OPTION
(*3) : CONNECTOR PLUG FACTORY-FITTED.
(*4) : SUPPLIED BY EQUIPMENTS TO BE CONNECTED.
(*5) : GROUND THRU CONNECTOR CLAMP.
(*6) : GROUND THRU CABLE CLAMP.
(*7) : CONNECT DISTRIBUTION BOX DS-370 TO FOUR LOCATIONS WITH 4-PAIR TWISTED CABLE.
(*8) : a+b≦50m

DRAWN June 7 '02 T. YAMASAKI		TITLE	CI-35/35H
CHECKED June 7 '02 Y. K.		名称	音波ログ／カラー潮流観測装置
APPROVED June 7 '02 Y. K.			相互結線図
SCALE	MASS kg	NAME	DOPPLER SONAR CURRENT INDICATOR
DWG No. C7242-C01- E			INTERCONNECTION DIAGRAM

FURUNO ELECTRIC CO., LTD.

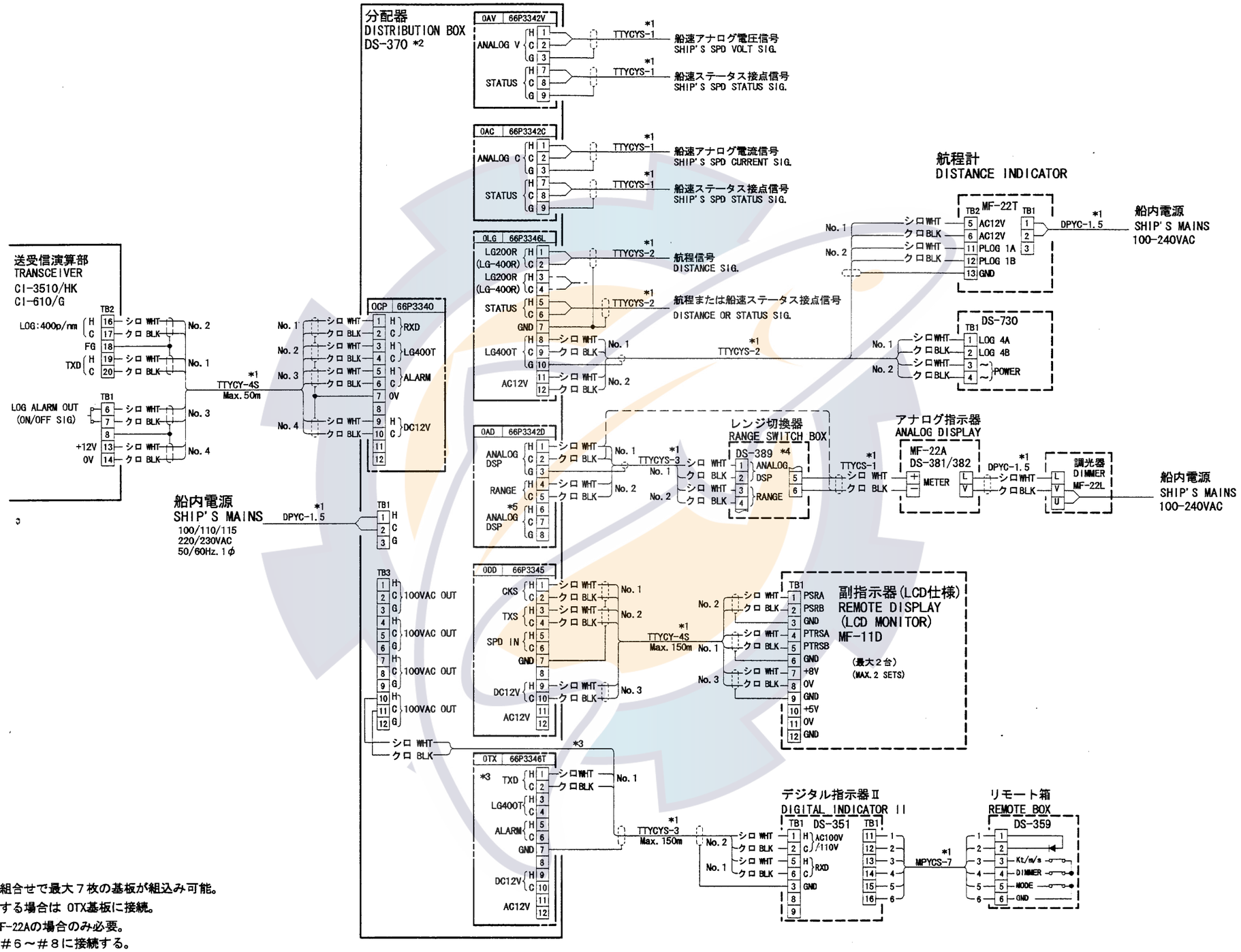

注記

＊１）造船所手配。

＊２）分配器には任意の組合せで最大７枚の基板が組込み可能。

＊３）分配器２個を使用する場合は OTX基板に接続。

＊４）レンジ切換器は MF-22Aの場合のみ必要。

＊５）２台目の指示器は＃６～＃８に接続する。

NOTE

*1. SHIPYARD SUPPLY.

*2. DISTRIBUTION BOX CAN INCORPORATE SEVEN BOARDS IN ANY CONBINATION.

*3. WHEN TWO DISTRIBUTION BOXES ARE USED, CONNECT SUCCEEDING ONE TO OTX BOARD.

*4. RANGE SWITCH BOX REQIRED FOR MF-22A ONLY.

*5. USE #6 TO #8 FOR No.2 DISPLAY.

DRAWN May. 8 '02 T. YAMASAKI		TYPE	DS-370
CHECKED 02/5/8		名称	分配器
APPROVED 02/5/8	CI-60/60G CI-35/35H		相互結線図
		NAME	DISTRIBUTION BOX
DWG. No. C7242-C02- E			INTERCONNECTION DIAGRAM

FURUNO ELECTRIC CO., LTD.

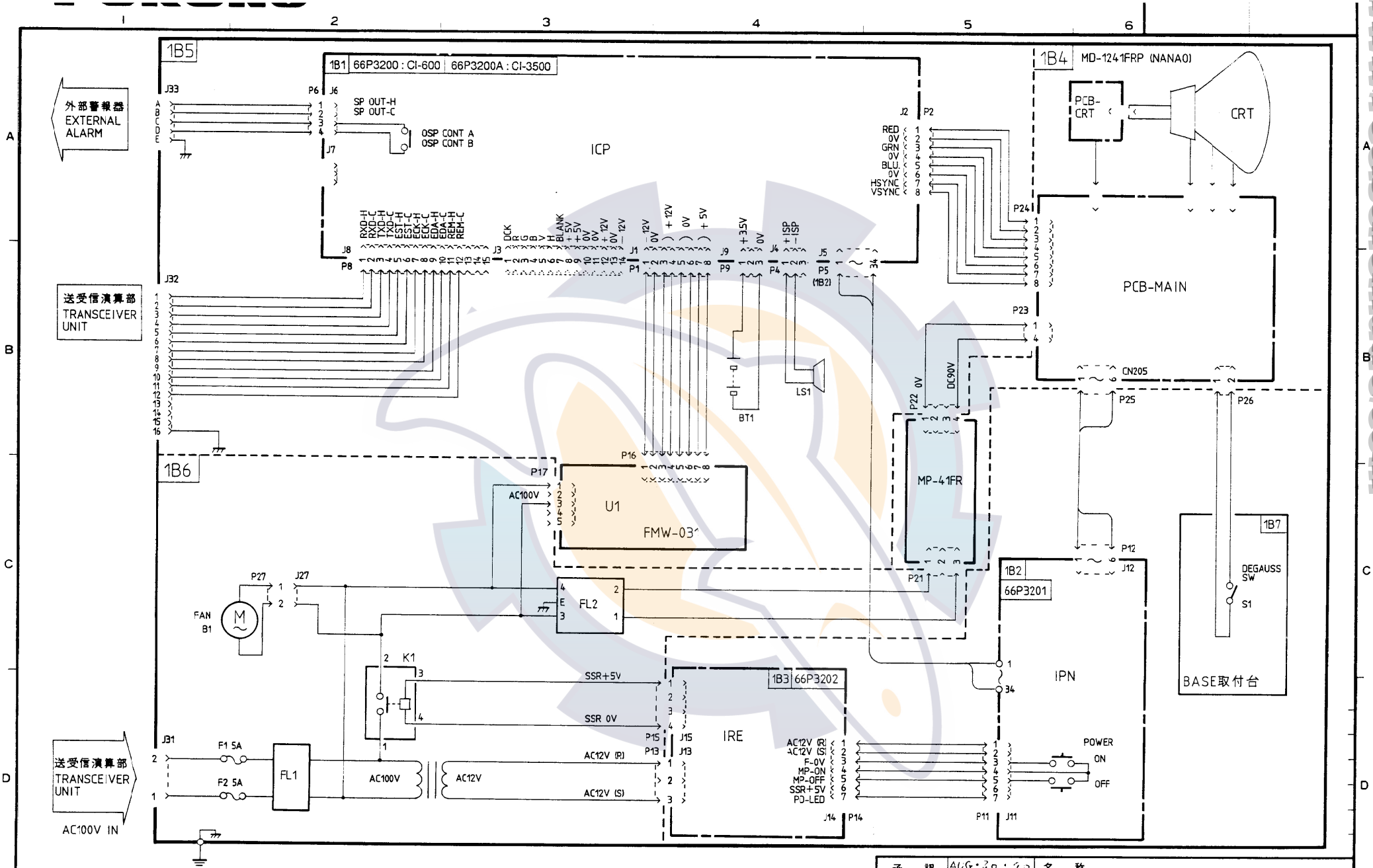

承認 APPROVED	AUG・30・'90 T. NAKAL C	名称 TITLE	CI-600 CI-3500 指示器総合回路図 DISPLAY UNIT
検図 CHECKED	AUG・30・'90 M. IKEDA		
製図 DRAWN	AUG・30・'90 TAKAHASHI	図番 DWG. NO.	C7228-K01-B

FURUNO ELECTRIC CO., LTD.

S-3

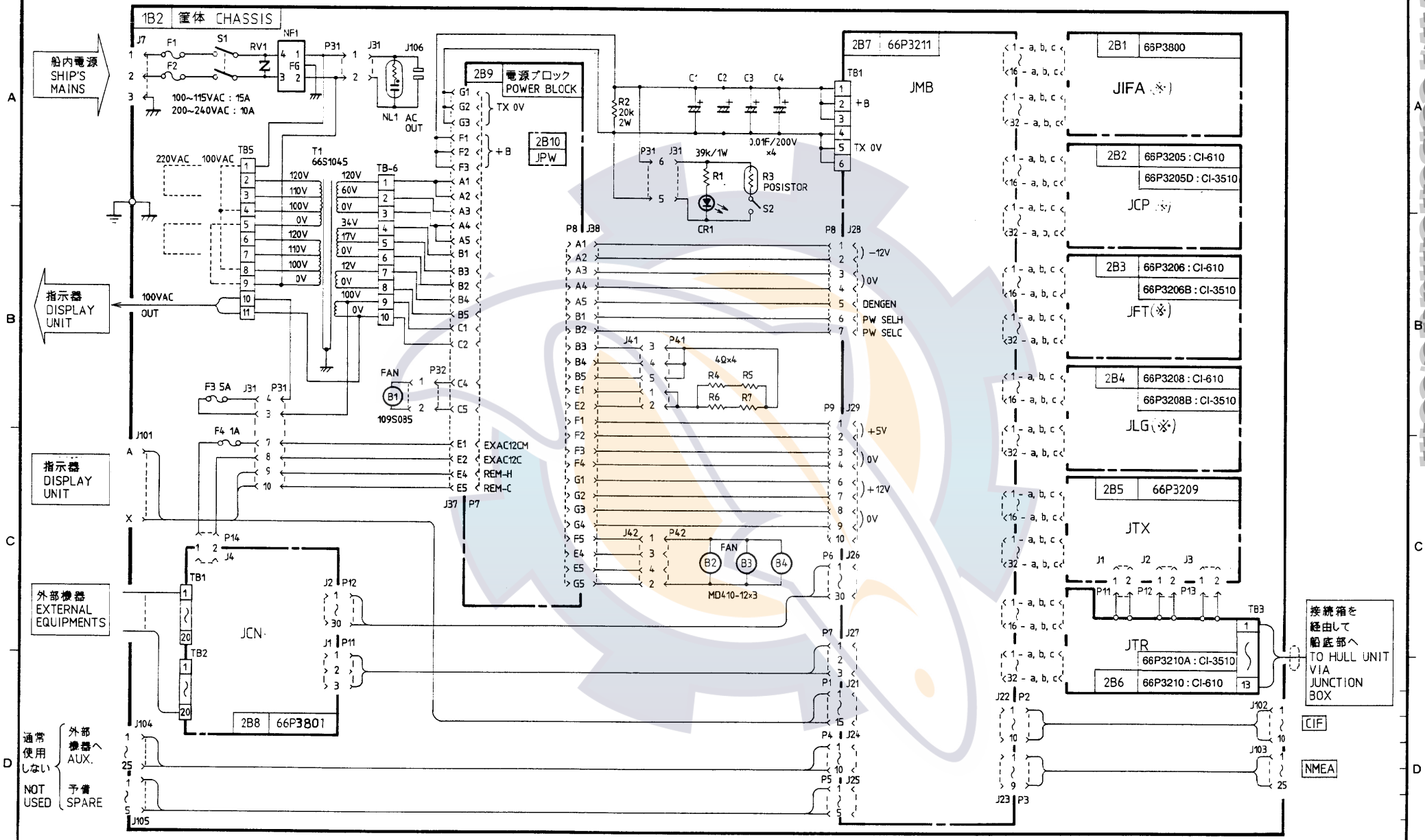

(※)印は社外秘回路図
MARK(※): NOT PUBLISHED.

承認 APPROVED	AUG.30.'90 TAKAKAN.C	名称 TITLE	CI-610 CI-3510 送受信演算部総合回路図 TRANSCEIVER UNIT
検図 CHECKED	AUG.30.'90 M. IKEDA		
製図 DRAWN	AUG.30.'90 TAKAHASHI	図番 DWG. NO.	C7228-K02-D

REV : TA-7'92

FURUNO ELECTRIC CO., LTD.

S-4

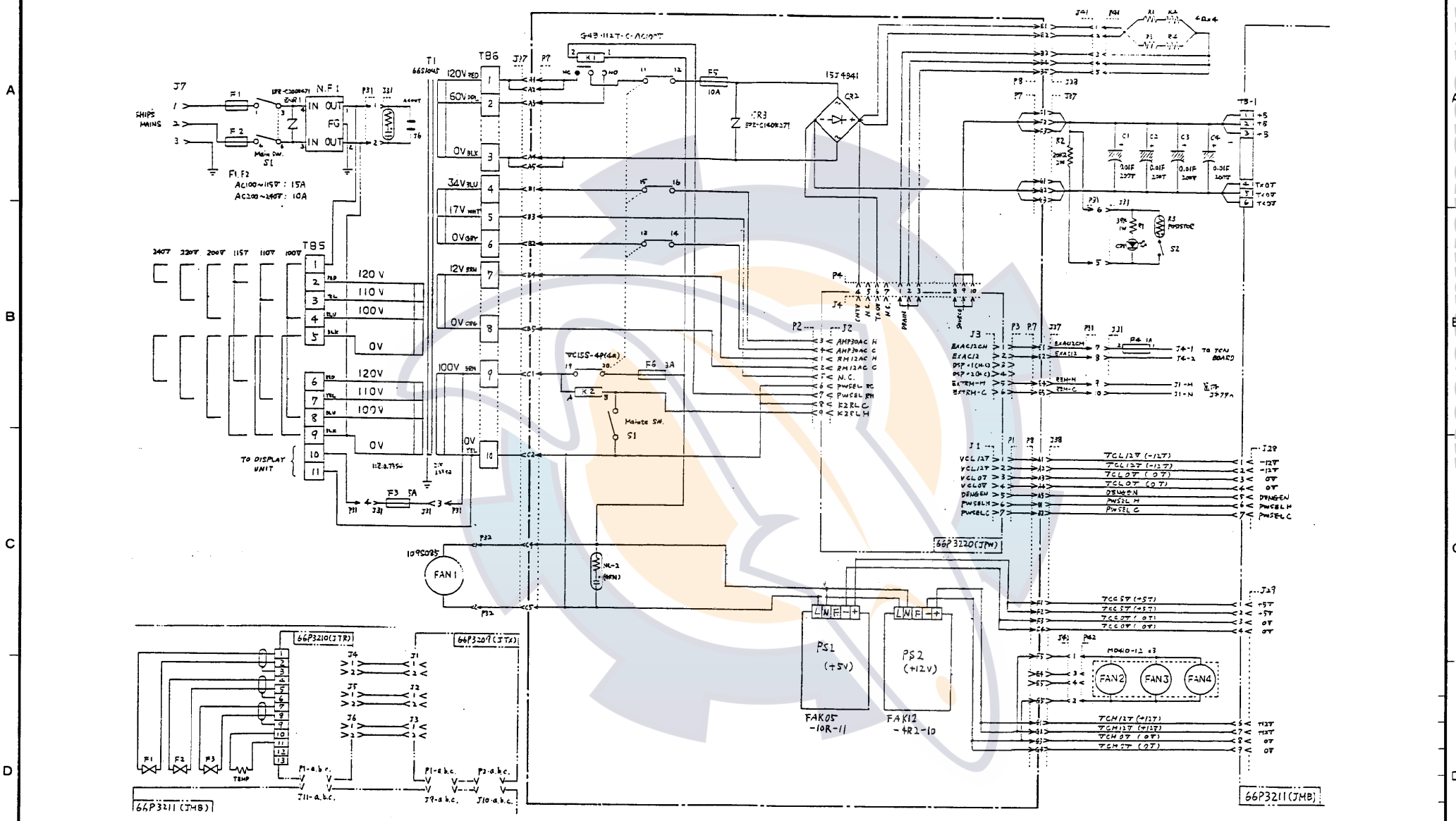

DRAWN Nov.22 '96 T. Yamasaki			TYPE CI-610/CI-3510
CHECKED Nov 22 '96 TAKAHASHI	CI-35H		名称 電源ブロック
APPROVED Nov 25 '96 K. Okamoto	CI-35 CI-60		回路図
SCALE ∝	MASS — kg	APPLICABLE TO: (MODEL) / BLOCK NO.	NAME POWER SUPPLY BLOCK
DWG NO. C7228-K05- D	66-017-2010- 3		SCHEMATIC DIAGRAM

FURUNO ELECTRIC CO., LTD.

FURUNO

S - 6

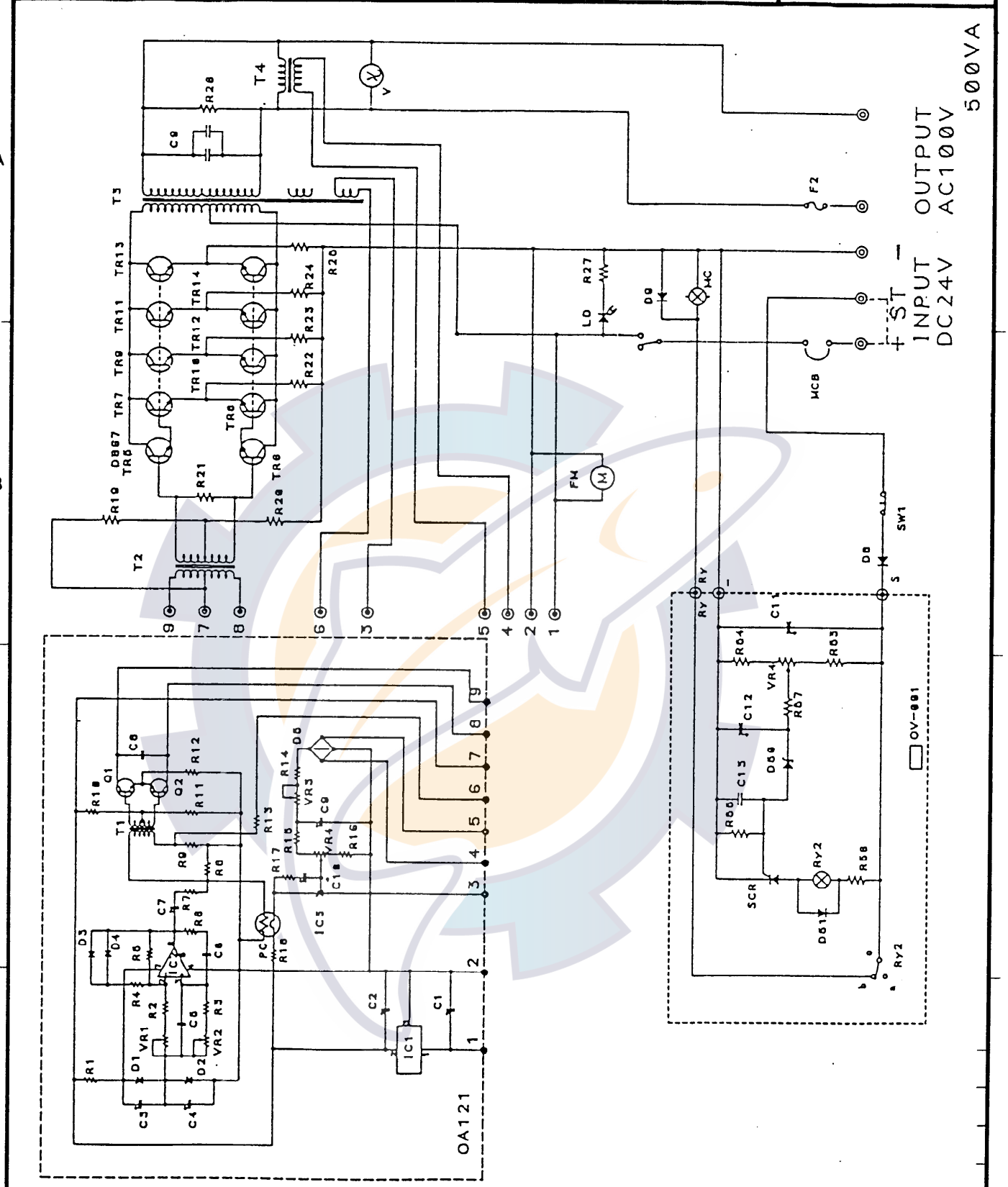

CI-60	品番 ITEM	品名 NAME	材質 MATERIAL	数量 Q'TY	図番 DWG.NO.	摘要 REMARKS

承認 APPROVED	SEP. 7 '90 T. NAKAGUC	三角法 THIRD ANGLE PROJECTION		名称 TITLE	TR-2450 DC/AC インバータ INVERTER
検図 CHECKED	Sep 6 '90 M. IKEDA	尺度 SCALE	/		
製図 DRAWN	Sep. 5 '90 TAKAHASHI	重量 WEIGHT	kg	図番 DWG. NO.	C7228-K11-A

FURUNO ELECTRIC CO., LTD.

FURUNO

S - 7

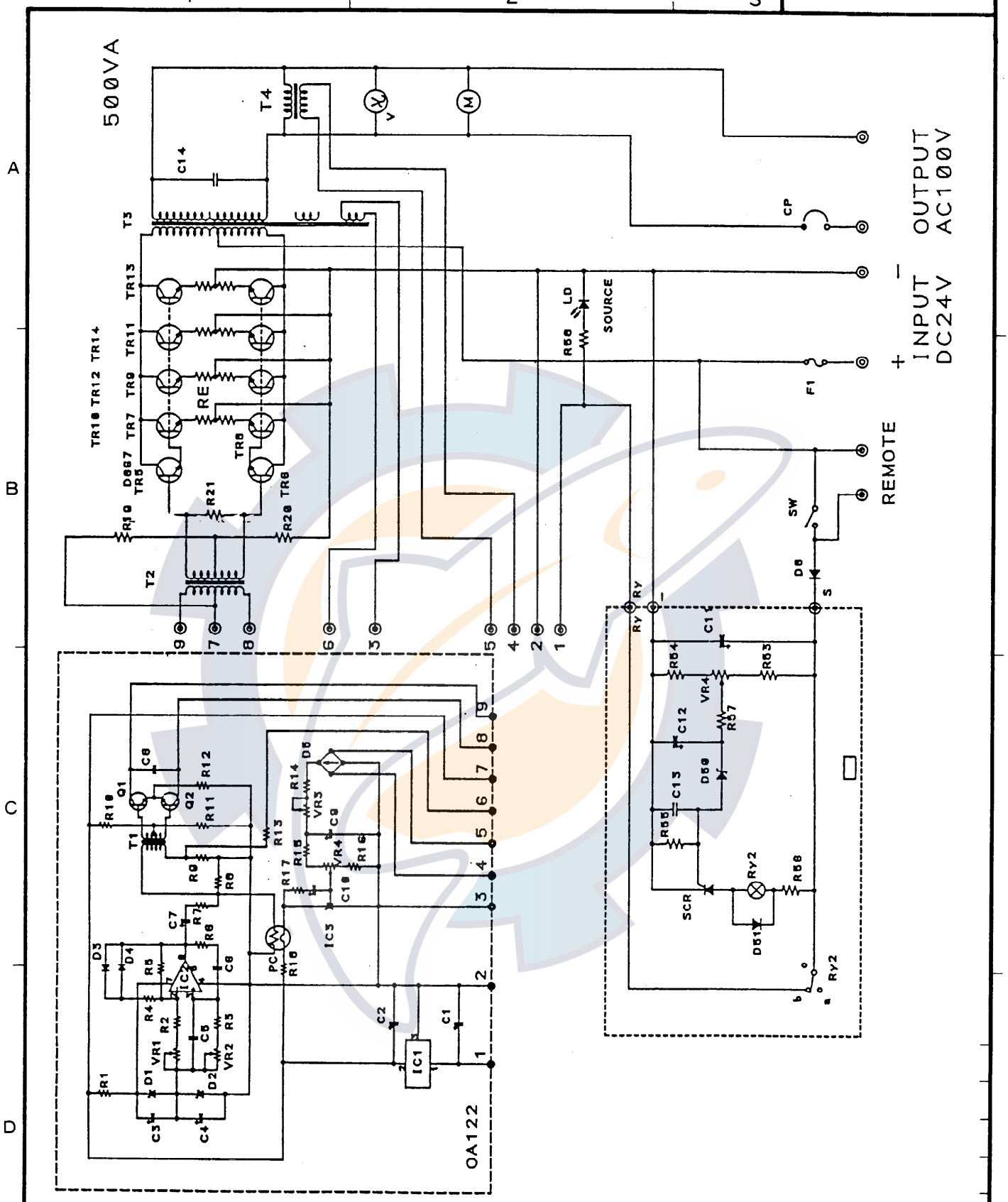

CI-60/CSH-5	品番 ITEM	品名 NAME	材質 MATERIAL	数量 Q'TY	図番 DWG.NO.	摘要 REMARKS

承認 APPROVED	SEP. 7 '90 T.NAKAGIC	三角法 THIRD ANGLE PROJECTION		名称 TITLE	CSH-5050 DC/AC インバータ INVERTER
検図 CHECKED	Sep. 6 '90 M. IKEDA	尺度 SCALE	/		
製図 DRAWN	Sep. 5 '90 TAKAHASHI	重量 WEIGHT	kg	図番 DWG.NO.	C1273-K26-A

FURUNO ELECTRIC CO., LTD.