FURUNO

INSTALLATION MANUAL

COLOR SCANNING SONAR

MODEL CSH-23/23F/24/24F

FURUNO ELECTRIC CO., LTD.
NISHINOMIYA, JAPAN

© FURUNO ELECTRIC CO., LTD.

9-52, Ashihara-cho,
Nishinomiya, Japan

Telephone: 0798-65-2111
Telefax: 0798-65-4200

•Your Local Agent/Dealer

 Printed in Japan

FIRST EDITION : NOV. 1997
F : SEP. 10,2001

PUB. No. IME-13040-F
CSH-23/24/F
(HIMA)

* 00080806900 *

SAFETY INSTRUCTIONS

WARNING

Do not open the cover unless totally familiar with electrical circuits and service manual.

High voltage exists inside the equipment, and a residual charge remains in capacitors several minutes after the power is turned off. Improper handling can result in electrical shock.

Turn off the power at the switchboard before beginning the installation.

Fire or electrical shock can result if the power is left on.

Do not install the equipment where it may get wet from rain or water splash.

Water in the equipment can result in fire, electrical shock or equipment damage.

Be sure no water leaks in at the transducer installation site.

Water leakage can sink the vessel. Also confirm that the transducer will not loosen by ship's vibration. The installer of the equipment is solely responsible for the proper installation of the equipment. FURUNO will assume no responsibility for any damage associated with improper installation.

WARNING

Install the specified transducer tank in accordance with the installation instructions. If a different tank is to be installed the shipyard is solely responsible for its installation, and it should be installed so the hull will not be damaged if the tank strikes an object.

The tank or hull may be damaged if the tank strikes an object.

If a steel tank is installed on a wooden or FRP vessel, take appropriate measures to prevent electrolytic corrosion.

Electrolytic corrosion can damage the hull.

Be sure that the power supply is compatible with the voltage rating of the equipment.

Connection of an incorrect power supply can cause fire or equipment damage. The voltage rating of the equipment appears on the label above the power connector.

CAUTION

Ground the equipment to prevent electrical shock and mutual interference.

Observe the following compass safe distances:

	Standard	Steering
Display unit for CSH-23	0.9 m	0.68 m
Display unit for CSH-24	1.7 m	1.3 m

TABLE OF CONTENTS

1. SYSTEM CONFIGURATION

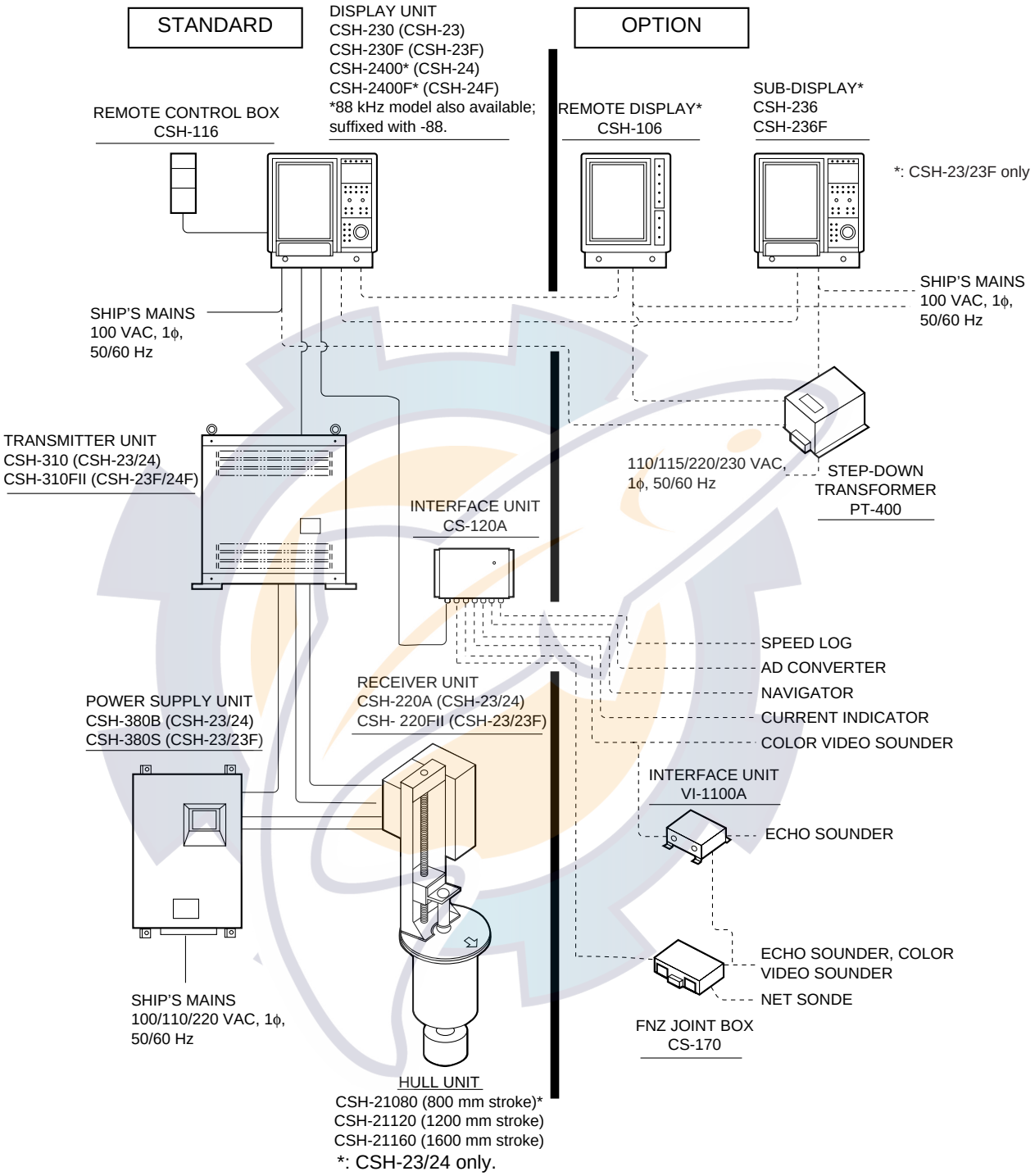

Figure 1-1 System configuration

2. EQUIPMENT LISTS

Standard Supply

Name	Type	Qty	Mass (kg)	Remarks		
Display Unit	CSH-230	1	35	CSH-23		
	CSH-230F			CSH-23F		
	CSH-2400			CSH-24		
	CSH-2400F			CSH-24F		
Transmitter Unit	CSH-310	1	96	CSH-23/24		
	CSH-310FII		110	CSH-23F/24F		
Receiver Unit Power Supply Unit	CSH-220A	1	47	CSH-23/24		
	CSH-220FII			CSH-23F/24F		
	CSH-380B	1	56	CSH-23/24		
	CSH-380S			CSH-23F/24F		
Hull Unit	CSH-21080	1	673	Stroke 800 mm*		
	CSH-21120		812	Stroke 1200 mm		
	CSH-21160		873	Stroke 1600 mm		
Remote Control Box	CSH-116	1	0.4			
Interface Unit	CS-120A	1	3			
Installation Materials	CP10-02700	1		6 pairs cable	CSH-23/23F	
				CP10-02710		
	CP10-03400			6 pairs cable	CSH-24/24F	
				CP10-03410		
Spare Parts	SP10-01700	1		CSH-23/24		
	SP10-01800			CSH-23F/24F		
Accessories	FP10-02100	1		FP-10-01801 FP10-01201 FP10-01203	CSH-23	See end of this book.
				Nyron cover 10-051-1031		
	FP-01900			FP10-01201 FP10-01203 FP10-01901	CSH-24	
				Nyron cover 10-054-1021		

*CSH-23/24 only

Optional Equipment

Name	Type	Mass (kg)	Code No.	Remarks
FNZ Joint Box	CS-170	2		
Step-down Transformer	PT-400	22		
E/S Interface Unit	VI-1100A	2		
Remote Display Unit	CSH-106	25		CSH-23/23F only
Sub-Display Unit	CSH-236	33		
Sub-Display Unit	CSH-236F	33		
Hood	FP10-01801		006-027-830	For CSH-23/24
Hood	FP10-01901		000-690-855	For CSH-24/24F
Filter	OP10-11		006-997-710	For CSH-23/2F
Filter	FP10-02000		000-690-856	For CSH-24/24F
Extension Cable Set (with inst. materials)	CSH-1600		000-068-165	For CSH-23/23F
	CSH-1500		000-068-927	For CSH-24/24F
37C Cable	10S1258		000-101-006	Specify length
7C Cable	10S1259		000-101-007	
16P Cable	10S1260		000-101-008	
Handle Assembly	OP10-3		006-949-950	
Mounting Fixture	OP10-9		006-990-040	For CSH-116
Automatic Raise Modification Kit	CSH-1500		000-068-927	

* CSH-23/24 only

3. MOUNTING THE EQUIPMENT

3.1 Mounting the Hull Unit and Receiver Unit

Location of hull unit

Decide the location of the hull unit through consultation with the dockyard and shipowner. When deciding the location, the following points should be taken into account.

- Select an area where propeller noise, cruising noise, air bubbles and interference from turbulence are at a minimum. Generally, the point at 1/3 to 1/2 of the ship's length from the bow on or near the keel is optimum. On-the-keel installation is advantageous for minimizing oil consumption in comparison with off-the-keel. If the hull unit can not be installed on the keel, the center of the retraction tank should be within 600 mm of the keel to prevent a rolling effect.

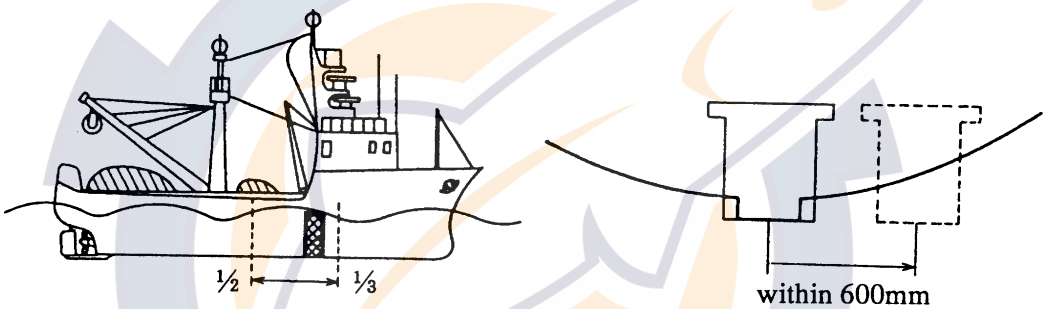

Figure 3-1 Hull unit mounting location

- Select a place where the hull bottom is flat and the draft is sufficiently deep. Normally, the transducer should protrude at least 500 mm beyond the keel to minimize the effect of air foam and bubbles.
- Select a place where interference from other equipment is minimal. The hull unit should be at least 2.5 m away from the transducers of other equipment.
- No obstacle should be in the fore direction since it causes a shadow zone and aerated water, resulting in poor sonar performance.
- The space shown in the figure on the next page is required around the hull unit for wiring and maintenance.
- If the ambient temperature of the unit is below 0°C, provide the sonar compartment with a heater to keep the temperature above 0°C.

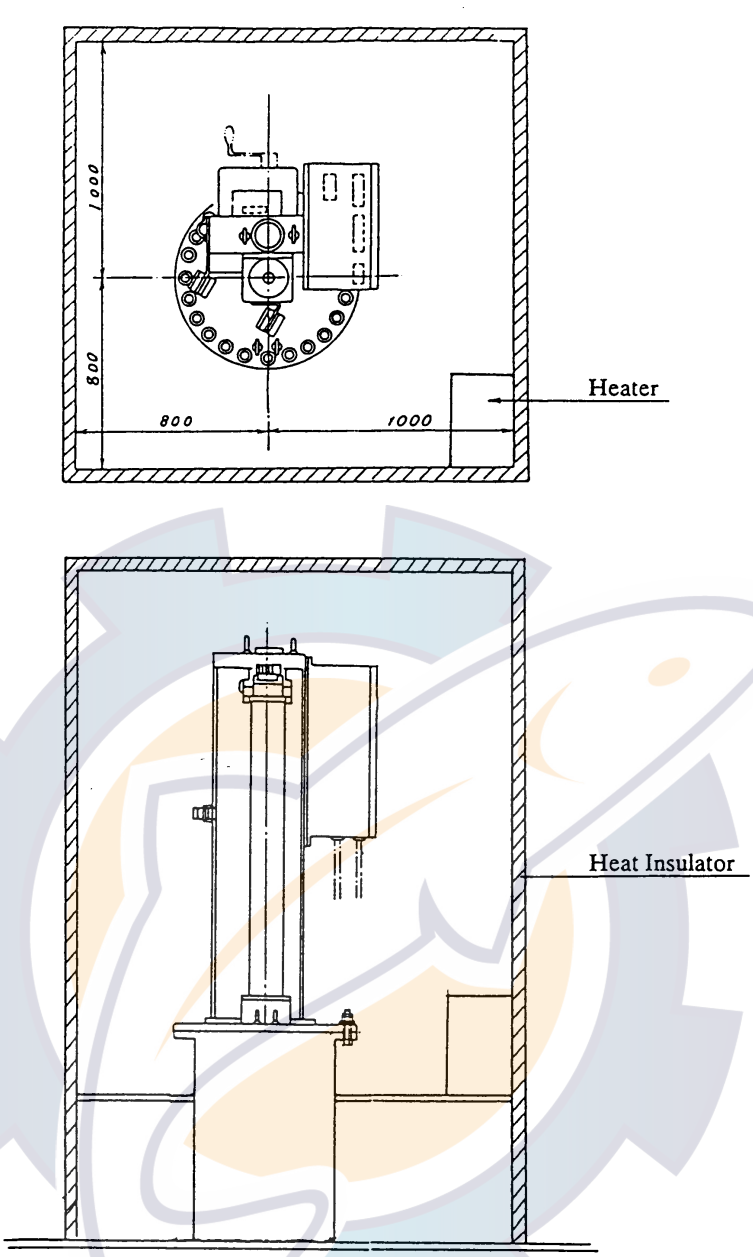

Figure 3-2 Maintenance space, example sonar compartment

Shortening the retraction tank

The retraction tank is 1300 mm in length when supplied. Shorten the tank as necessary so that the transducer is placed well below the keel when it is lowered. The following table provides guidelines for shortening the tank. Refer also to the retraction tank installation drawing at the back of this manual.

Installation Method **XDCR Travel**	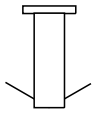	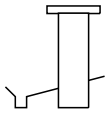	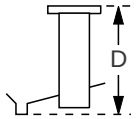	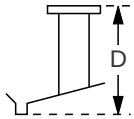
800 mm	Remove 297 thru 382 mm from the bottom.	Same as left	Remove 297 thru 382 mm from the bottom. Note that the length "D" must be less than 1003 mm.	Same as left
1200 mm	Remove 97 thru 382 mm from the bottom.	Same as left	Remove 97 thru 382 mm from the bottom. Note that the length "D" must be less than 1203 mm.	Same as left
1600 mm	Remove within 282 mm from the bottom.	Same as left	Remove within 282 mm from the bottom. Note that the length "D" must be less than 1703 mm.	Same as left

Figure 3-3 Guidelines for shortening the retraction tank

Note 1: In the 800 mm type hull unit, more than 297 mm must be removed from the bottom so that the transducer fully protrudes from the tank. If more than 382 mm is removed, the transducer cannot be retracted into the tank.

Note 2: In the 1200 mm type hull unit, the transducer will not fully protrude unless 97 mm is removed from the bottom, and cannot be fully retracted if more than 382 mm is removed.

Note 3: In the 1600 mm type hull unit, the transducer cannot be fully retracted if more than 282 mm is removed.

Note 4: When 382 mm (282 mm for 1600 mm type) is removed and “D” is minimum, the effect of air foam is minimized because the transducer fully protrudes in water.

Remarks for installation of retraction tank

1. Make, if possible, the installation location a double bottom structure.
2. Install, if possible, the tank on the keel where the tank can be most firmly fixed.
3. Install the reinforcement ribs as near as possible to the top of the retraction tank, allowing space for tightening of bolts and nuts.

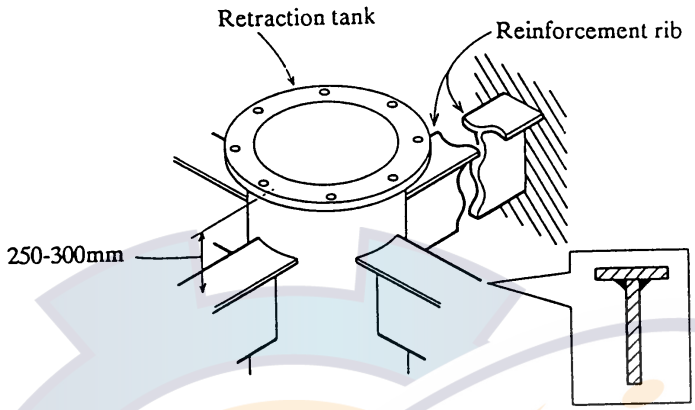

Figure 3-4 How to install reinforcement ribs

4. When an attachment flange is used, install reinforcement ribs to the attachment flange.

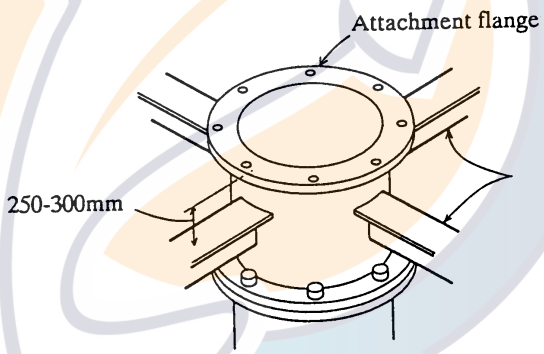

Figure 3-5 Installing reinforcement ribs to the attachment flange

5. Add a doubling plate at the location where the retraction tank is welded to the hull bottom. The size of the doubling plate is normally 1200 mm to 1300 mm in diameter so that it lies across two bottom frames.

Installing hull unit on retraction tank

After welding the retraction tank and allowing sufficient time for cooling, install the hull unit as follows:

1. Clean the hull unit flange, the O-ring and O-ring groove and coat them with a slight amount of grease. Place the O-ring in position on the tank flange.
2. Lay the gasket (1) on the top of the tank flange.
3. Orient the hull unit so that the bow mark (arrow) on its flange points toward the ship's bow. Note that heading adjustment in the display unit is required if the bow mark does not face the ship's bow.
4. For the 1200 mm transducer travel type, 11 of the 24 bolt holes on the hull unit flange have already been fitted with bolts. Insert the gasket (2) into the bolt holes of the tank flange to which these 11 bolts are fitted. Note that it is difficult to fit them after the hull unit has been placed on the tank.
5. Confirm that the O-ring and the gasket (1) are in position. Place the hull unit on the tank.
6. Coat every bolt, washer and nut with slight amount of grease to ease removal. Fit the insulation gasket (2) into the bolt holes of both the tank and hull unit flanges. Fasten the hull unit to the retraction tank with gasket (2), flat washers, spring washers and hex bolts. (Insulation gasket (2) and gasket (2) are used on the 1200 mm transducer travel type only.)
7. Reinforce the hull unit against vibration by extending stays to the ship's hull from the two eye bolts at the top of the hull unit, referring to figure at the top of the next page.

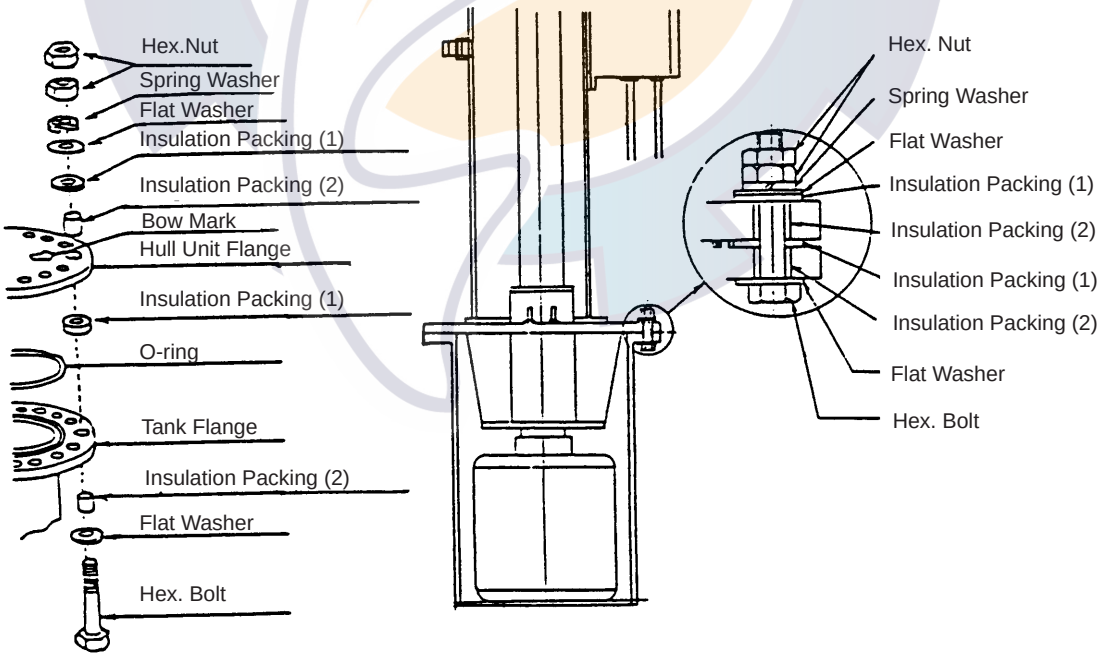

Figure 3-6 Installation of hull unit

Installing stays (anti-vibration measure)

Install stays from the top of the hull unit to the ship's hull. The stays should be angle iron with a size of 75 x 75 x 9 mm or more and at least two pieces should be used; one each to ship's bow and stern directions. Install if possible, two more stays in ship's transverse direction.

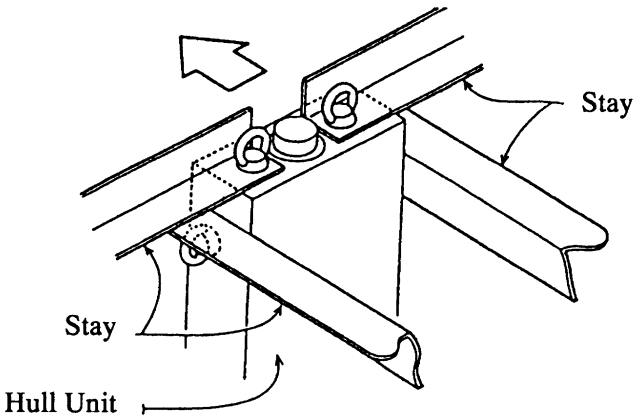

Figure 3-7 Proper installation of stays

Do not install the stays as shown below. Vibration-resistance effect is reduced since vibration is applied to the stays as rotation force. Install them horizontally.

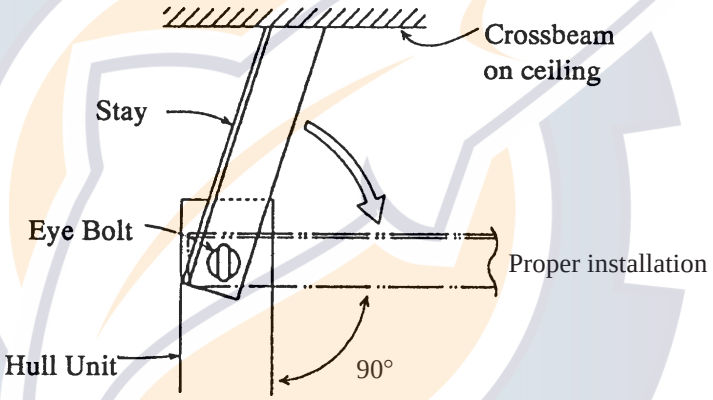

Figure 3-8 Proper and wrong installation of stay

Fastening receiver unit to hull unit

Fasten the receiver unit to the left side of the hull unit as shown at right.

A transducer cable protection cover has been fitted where the receiver unit is to be fastened to the hull unit. Remove it when mounting the receiver unit.

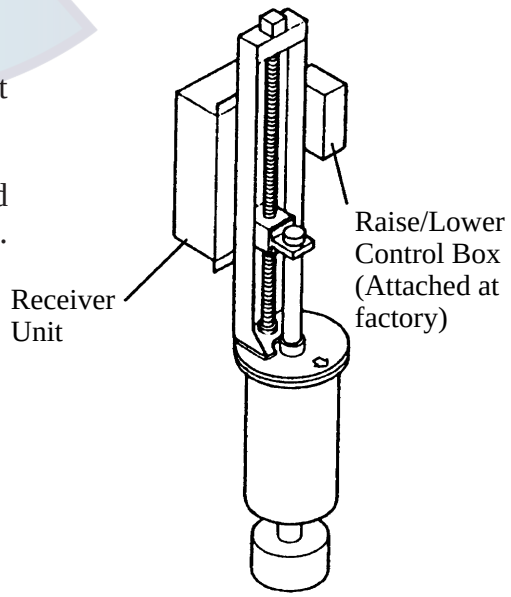

Figure 3-9 Mounting of receiver unit

3.2 Mounting the Display Unit/Sub-display Unit

The display unit/sub-display unit is designed for tabletop mounting. When selecting as mounting location consider the following conditions:

- Place where operating personnel are able to control the unit easily while observing the fishing ground or the area surrounding the vessel.
- Place at least 1 m away from a magnetic compass and components which have a magnet (radar magnetron, loudspeaker, high power transformer, etc.)
- Place not exposed to direct sunlight, water splashes or hot air.
- Place where maintenance and ventilation clearance shown in the outline drawings is ensured.
- Place where the CRT face is within ±45° from vertical.

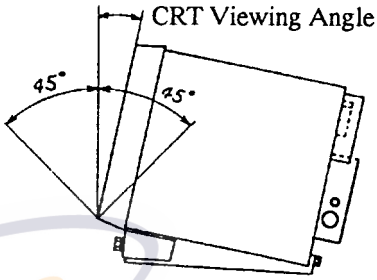

Mounting the display unit/sub-display unit

1. Remove the mounting base by unscrewing the two bolts at the front bottom.
2. Fix the mounting base to the table with four M10 bolts, flat washers, spring washers and nuts. It is recommended that a rubber mat be placed under the mounting base to absorb vibration.
3. Fasten the unit to the mounting base with two bolts. When the space around the unit is limited, make wirings to the display unit first and then fasten the unit.

Note: For the CSH-24, remove eye bolts at the top of the display unit and set cosmetic screws (supplied with installation materials) to eye bolt holes.

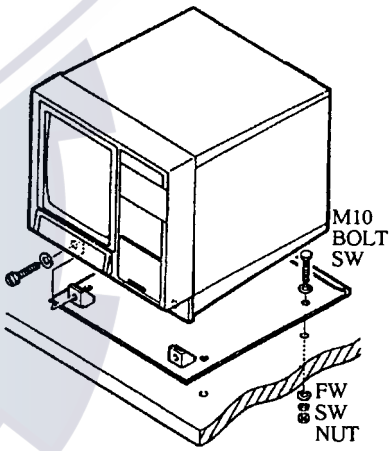

Figure 3-10 Mounting the display unit, sub-display unit

3.3 Mounting the Transmitter Unit

The transmitter unit can be mounted with or without mounting legs. For use without mounting legs remove them and use inside mounting holes.

The transmitter unit should be reinforced against vibration by stays extending from the eyebolts on the top of the unit.

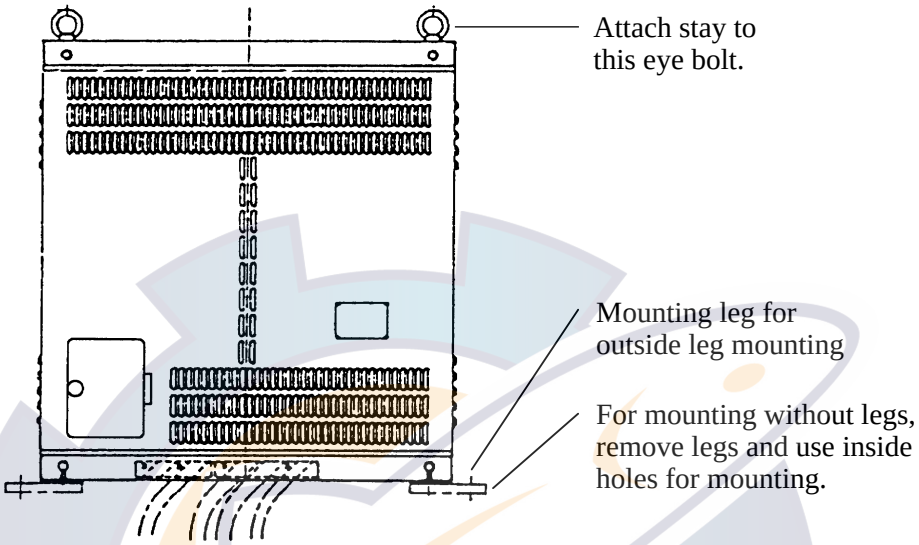

Figure 3-11 Transmitter unit

3.4 Mounting the Interface Unit

Since the interface unit connects with several navigation and fishing equipment, determine the installation site with the wirings to them taken into account. Furthermore, the unit incorporates a data selector and self-check switch, so select a place where they can be easily operated.

3.5 Mounting the FNZ Joint Box

The FNZ joint box is used for interchanging both TX trigger and sonde marker pulses from the echo sounder and the net sonde, therefore it should be installed as close as possible to the net-sonde indicator.

3.6 Grounding the Equipment

Ground all equipment with a suitable copper strap or ground wire. The location of the ground terminal of each unit is shown below.

⚠ CAUTION

Ground the equipment to prevent electrical shock and mutual interference.

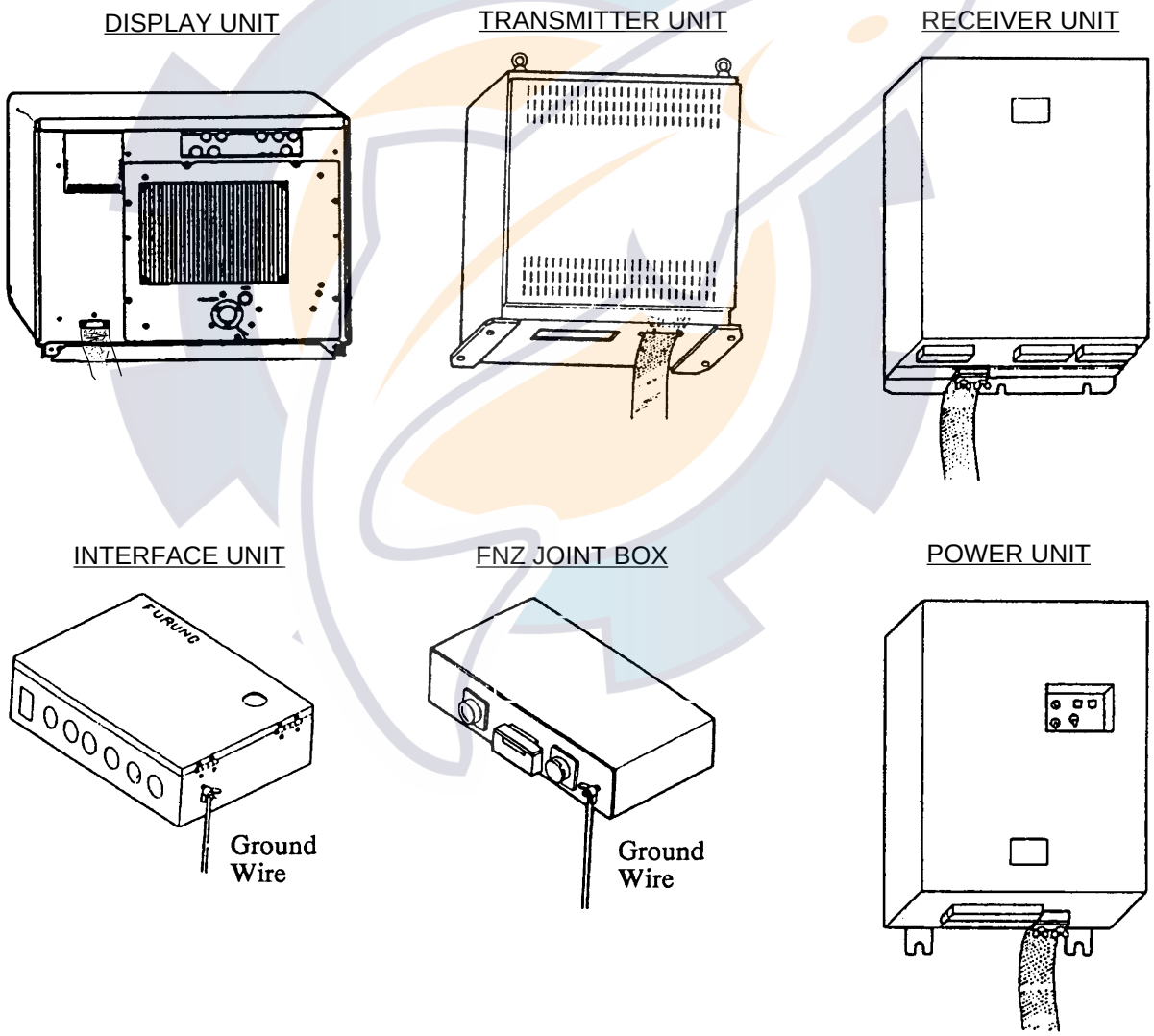

Figure 3-12 Location of ground terminals on equipment

4. WIRING

4.1 Cable Configuration

Wire Symbol	Name
○	Vinyl Sheath Wire
●	Shielded Wire
⬭	Twisted Pair Wire

10S1258

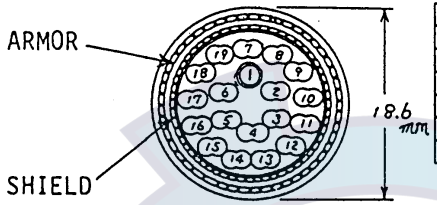

NO.	COLOR	NO.	COLOR	NO.	COLOR
2	BLK/BRN	8	BLK/PPL	14	BRN/GRN
3	BLK/RED	9	BLK/GRY	15	BRN/BLU
4	BLK/ORG	10	BLK/WHT	16	BRN/PPL
5	BLK/YEL	11	BRN/RED	17	BRN/GRY
6	BLK/GRN	12	BRN/ORG	18	BRN/WHT
7	BLK/BLU	13	BRN/YEL	19	RED/ORG

10S1259-1

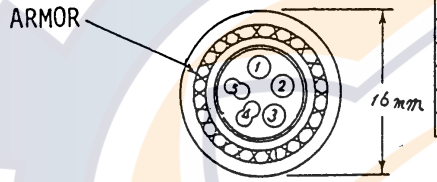

NO.	COLOR
1	BLK
2	WHT
3	RED
4	BRN/BLK
5	WHT/RED

10S1260

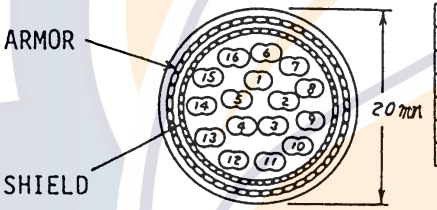

NO.	COLOR	NO.	COLOR	NO.	COLOR
1	YEL/BLK	7	RED/WHT	13	YEL/PPL
2	BLU/BLK	8	GRN/WHT	14	BLU/PPL
3	RED/BLK	9	YEL/GRY	15	RED/PPL
4	GRN/BLK	10	BLU/GRY	16	GRN/PPL
5	YEL/WHT	11	RED/GRY		
6	BLU/WHT	12	GRN/GRY		

10S1261

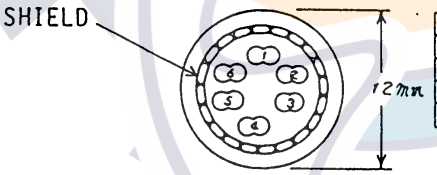

NO.	COLOR	NO.	COLOR
1	BRN/BLK	5	GRN/BLK
2	RED/BLK	6	BLU/BLK
3	ORG/BLK		
4	YEL/BLK		

Figure 4-1 Cable configuration

4.2 How to Use the Crimping Tool, Pin Extractor

A special crimping tool is necessary for connection of wires to the contact pins of the 38P connector. The pin extractor removes the contact pin from the connector body. This paragraph describes how to crimp and extract the contact pin.

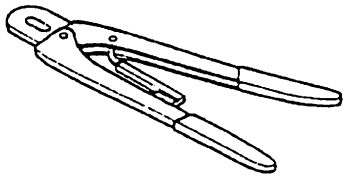		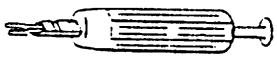
Crimping Tool 06-1001-016	Contact Pin 60-8017-0313-00-039	Pin Extractor 06-1877-04

Figure 4-2a Crimping tool, contact pin, pin extractor

How to use the crimping tool

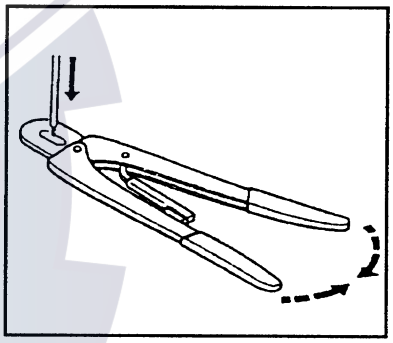

Figure 4-2b

How to use the pin extractor

If a contact pin is inserted into an incorrect hole on the connector body, remove it with the pin extractor.

1. Push the pin extractor into the pin hole from the side opposite to the pin inserting side.
2. Push in the head of the pin extractor. The retaining spring comes free and the contact pin can be removed.

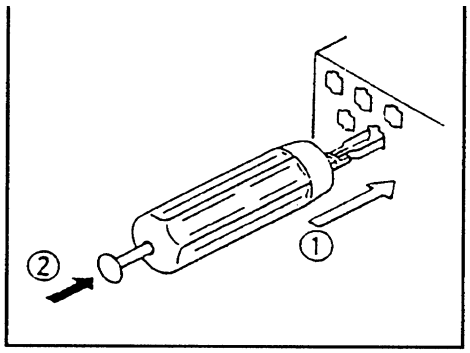

Figure 4-2c

4.3 Location of Connectors

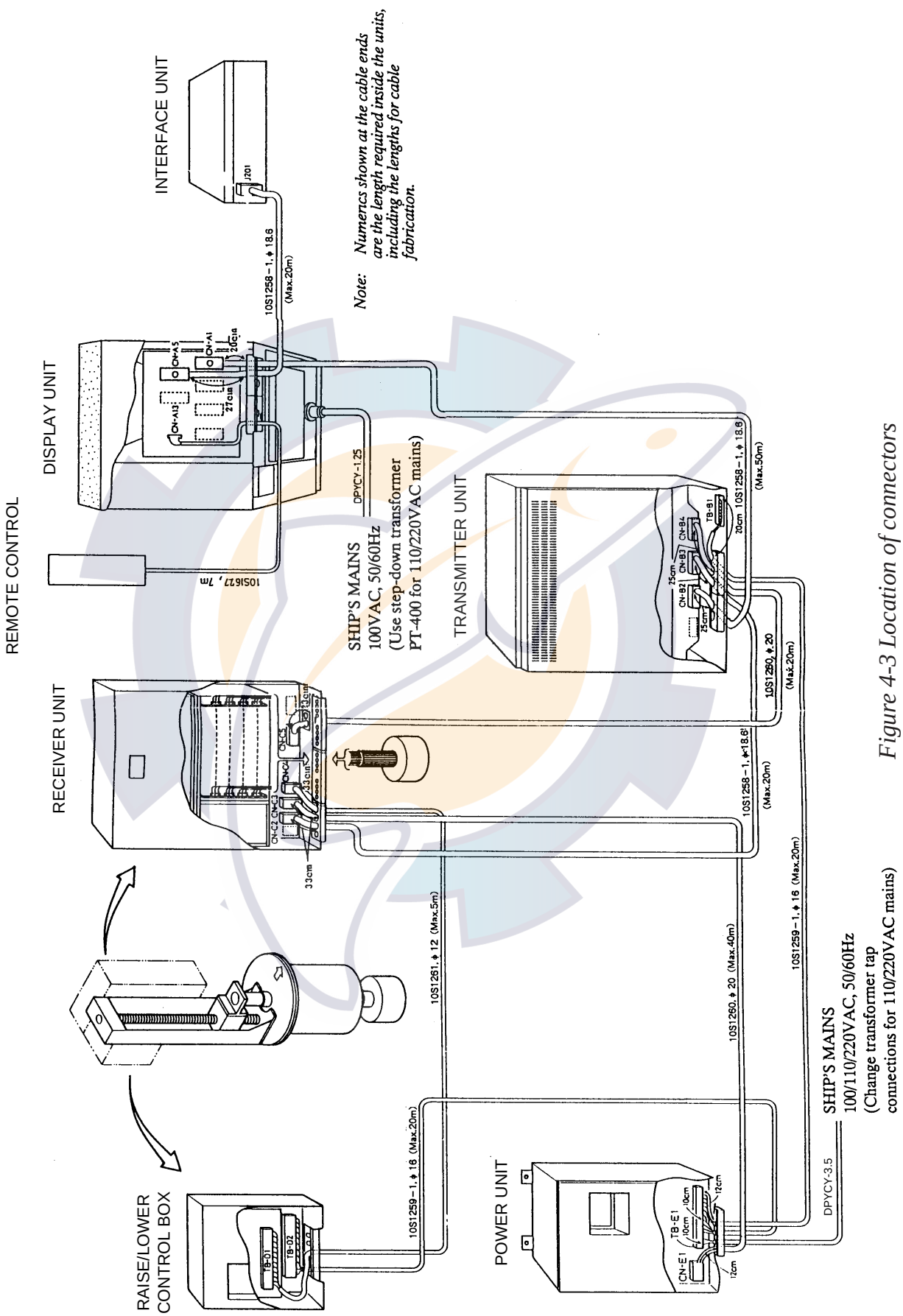

Figure 4-3 Location of connectors

4.4 Fabricating Cables, Assembling Connectors

Fabricating cable 00-8016-038-313-761HV (CN-A1, CN-A5 and J201)

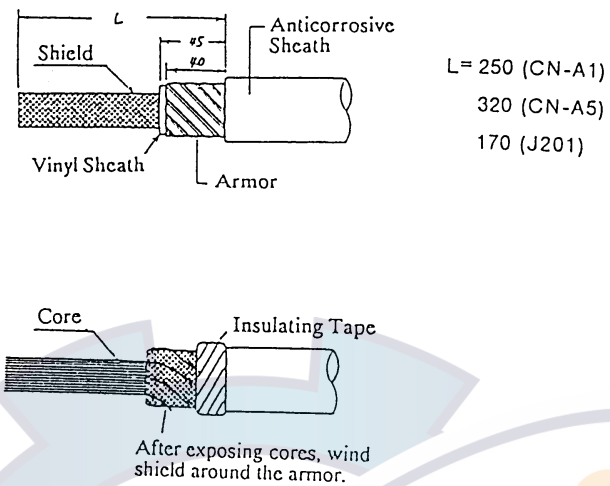

Figure 4-4 Fabricating cable 00-8016-038-313-761HV

Assembling 38P connector

Shorten the unused wires appropriately and treat their ends with vinyl tape to prevent short circuit.

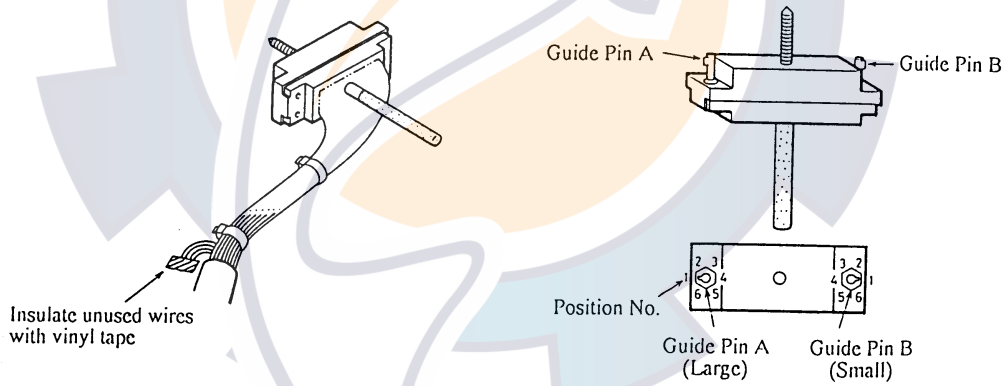

Figure 4-5 Assembling 38P connector

Positioning guide pins

Guide pins of the connector identify the mating receptacle. Position them as shown below.

Table 4-1 Guide pins and connectors CN-A1, CN-A5, J201

Connector / Guide Pin	CN-A1	CN-A5	J201	Positioning Tool
Guide Pin A (Large)	1	5	1	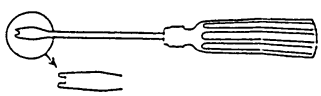
Guide Pin B (Small)	1	1	1	Type : 10-910-0179-0

Clamping the cable

Clamp the cable where the shield is folded back onto the armor.

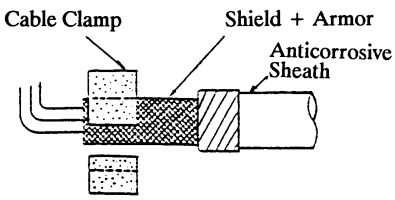

Figure 4-6 Clamping the cable

Assembling connector NSC-253P (CN-A15)

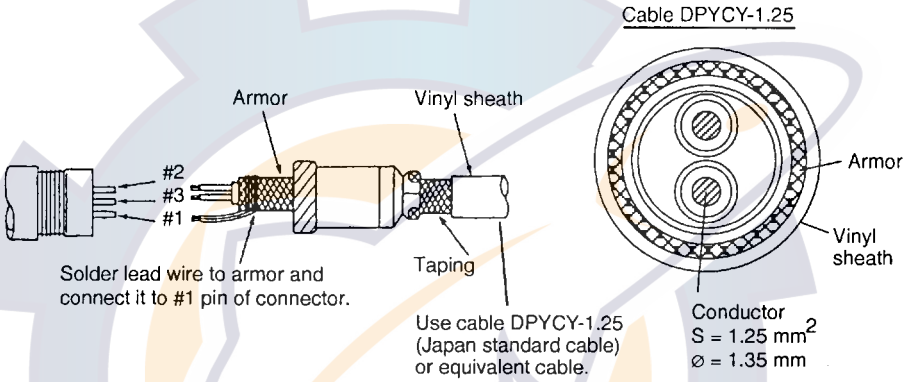

Figure 4-7 Assembling connector NSC-253P

Assembling BNC connector (CN-A7, CN-A8, CN-A9, CN-A10, CN-A11 and CN-A12)

1. Remove vinyl sheath of the cable by 15 mm.
2. Pass the cable through the nut, washer, gasket and clamp.
3. Unravel the shield and fold it back onto the clamp.
4. Remove the insulator, leaving 3 mm.
5. Trim the shield as shown in the drawing. Solder the center chip to the conductor of the cable.
6. Pass the cable through the housing and tighten the nut.

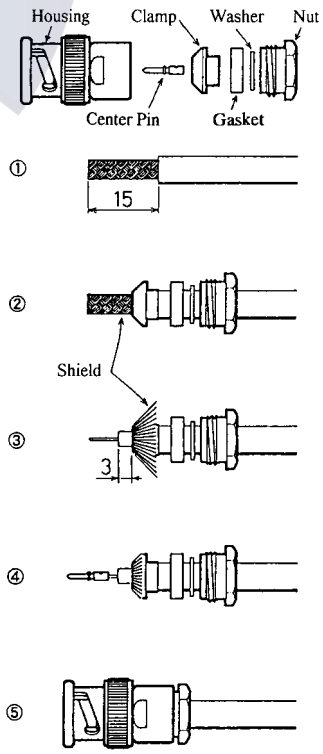

Figure 4-8 Assembling BNC connector

Fabricating cable 54-038-000-601/SC (CN-E1)

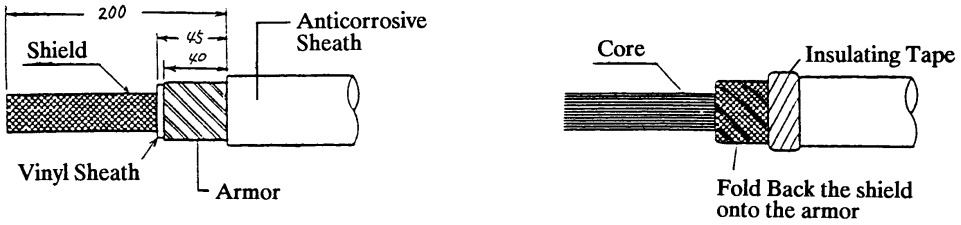

Figure 4-9 Fabricating cable 54-038-000-601/SC

Assembling 38P connector

1. Bundle the unused wires outside the connector case.
2. Fix the cover ①, taking heed of the cable outgoing direction.
3. Dress the wires and fix the cover ② and ③. Use a fragment of cable sheath to secure the wires at the connector clamp.
4. Shorten unused wires appropriately and treat their ends with vinyl tape to prevent short circuit.

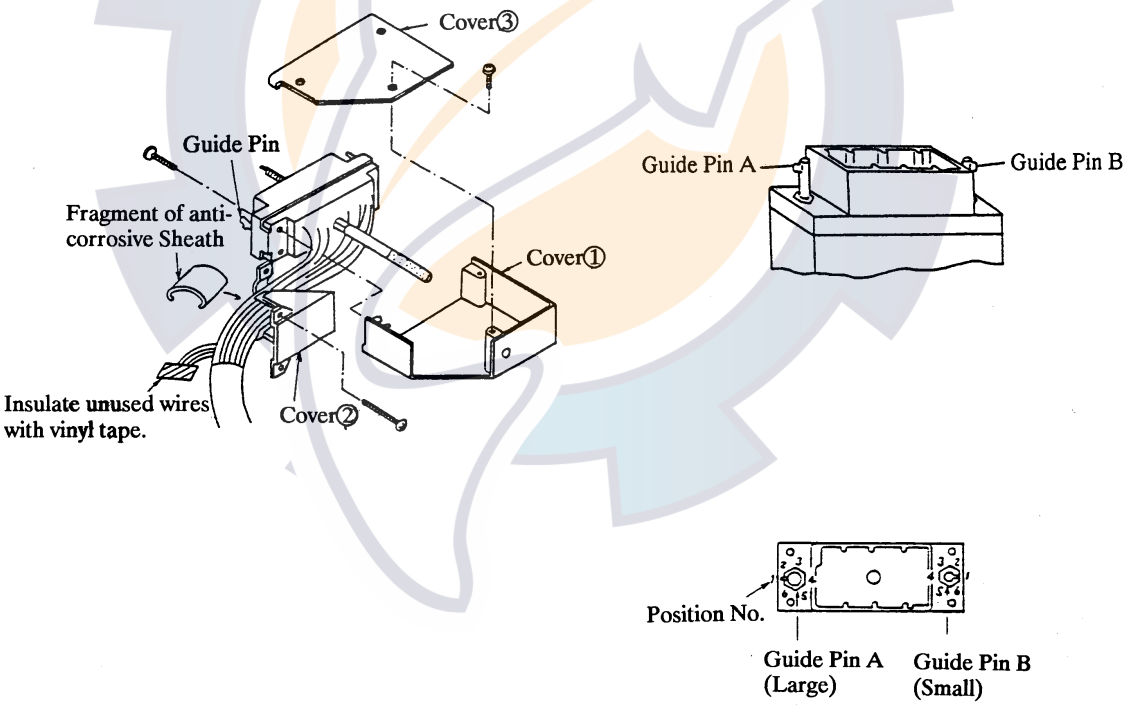

Figure 4-10 Assembling 38P connector

Positioning guide pins

Guide pins of the connector are used to identify the mating receptacle. Position them shown below.

Table 4-2 Guide pins and connector CN-E1

Connector / Guide Pin	CN-E1	Positioning Tool
Guide Pin A (Large)	2	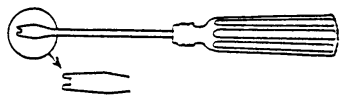
Guide Pin B (Small)	1	Type : 10-910-0179-0

Clamping the cable (side at power supply unit)

Clamp the cable as shown in below.

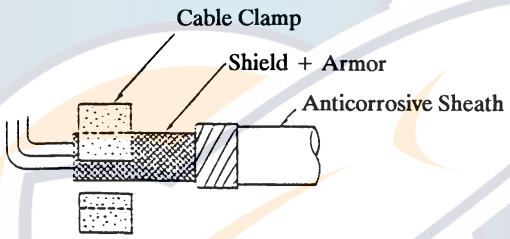

Figure 4-11

Fabricating cable 10S1259 (connected terminal board TB-E1)

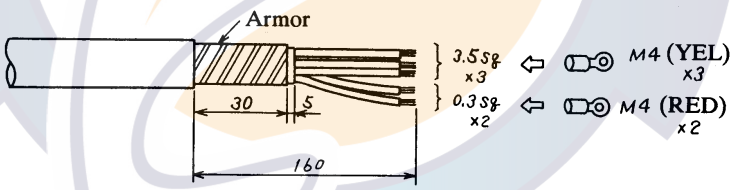

Figure 4-12 Fabricating cable 10S1259

Fabricating cable DPYCY-3.5 (connected to terminal board TB-E1)

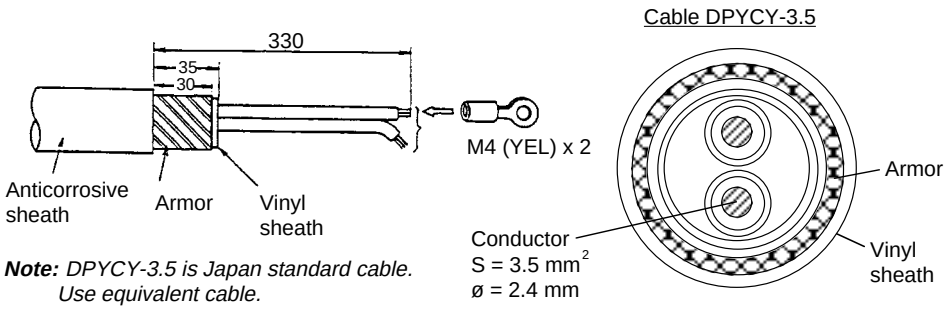

Note: *DPYCY-3.5 is Japan standard cable. Use equivalent cable.*

Figure 4-13 Fabricating cable DPYCY-3.5

Fabricating cable 54-038-000-601/SC (CN-B2, CN-B3, CN-B4)

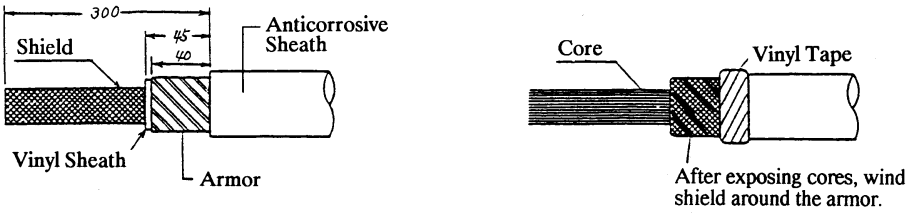

Figure 4-14 Fabricating cable 54-038-000-601/SC

Assembling 38P connector

1. Bundle the unused wires outside the connector case.
2. Fix the cover ①, taking heed of the cable outgoing direction.
3. Dress the wires and fix the cover ② and ③. Use a fragment of cable sheath to secure the wires at the connector clamp.
4. Shorten unused wires appropriately and treat their ends with vinyl tape to prevent short circuit.

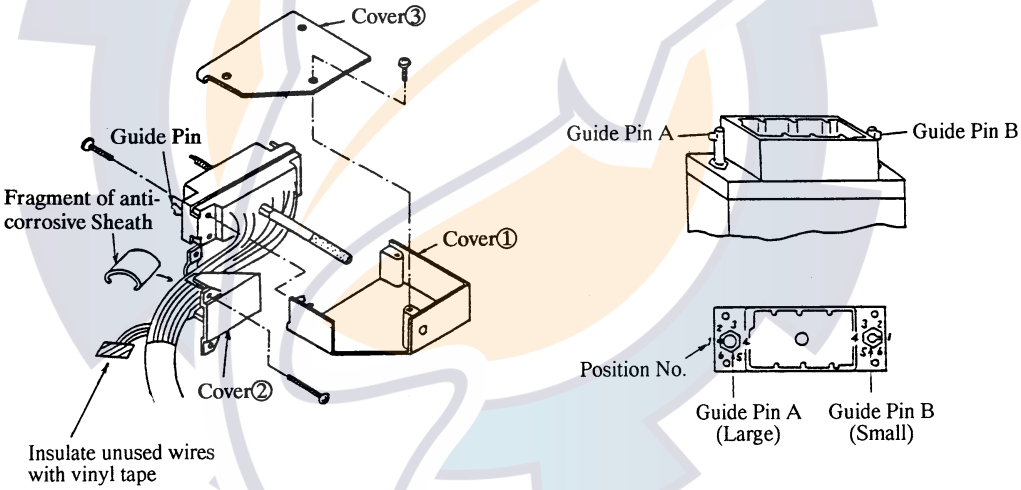

Figure 4-15 Assembling 38P connector

Positioning guide pins

Guide pins of the connector identify the mating receptacle. Position them as shown below.

Table 4-3 guide pins and connectors CN-B2, CN-B3, CN-B4

Connector / Guide Pin	CN-B2	CN-B3	CN-B4	Positioning Tool
Guide Pin A (Large)	1	1	3	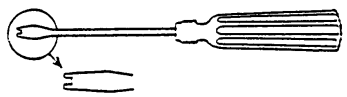
Guide Pin B (Small)	1	1	1	Type : 10-910-0179-0

Clamping the cable

Secure the cable with the cable clamp.

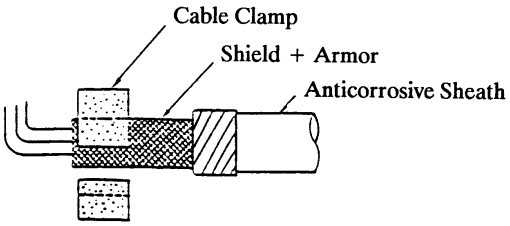

Figure 4-16 Clamping the cable

Fabricating cable 10S1259 (connected to terminal board TB-B1)

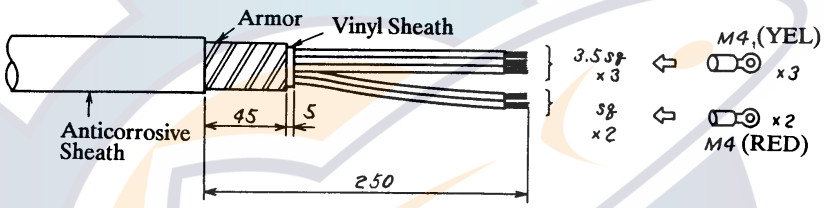

Figure 4-17 Fabricating cable 10S1259

Fabricating cable 54-038-000-601/SC (CN-C2, CN-C3 and CN-C5), 00-8016-020-313-703V (CN-C4)

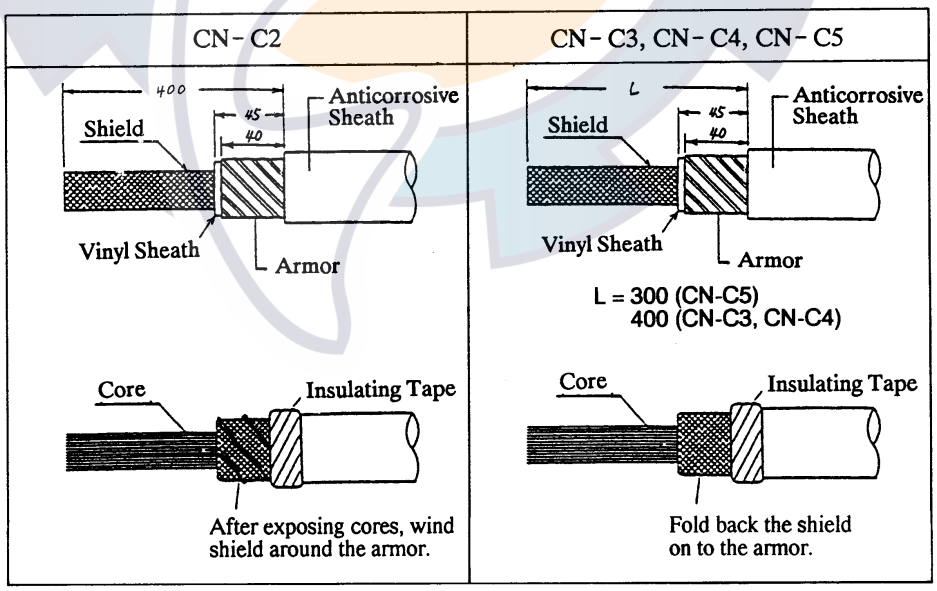

Figure 4-18 Fabricating cable 54-038-000-601/SC, 00-8016-020-000-703V

Assembling 38P connector

1. Bundle the unused wires outside the connector case.
2. Fix the cover ①, taking heed of the cable outgoing direction.
3. Dress the wires and fix the cover ② and ③. Use a fragment of cable sheath to secure the wires at the connector clamp.
4. Shorten unused wires appropriately and treat their ends with vinyl tape to prevent short circuit.

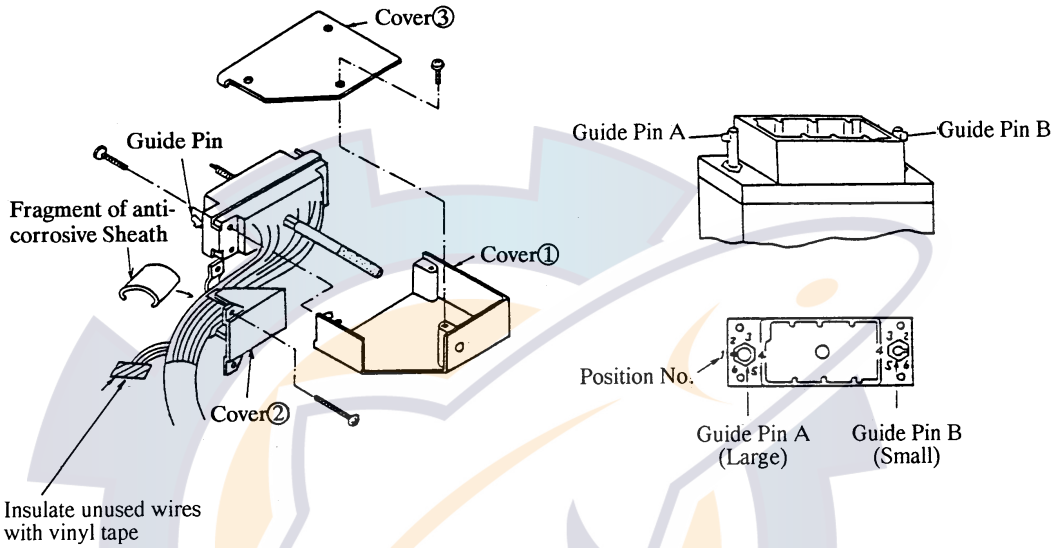

Figure 4-19 Assembling 38P connector

Positioning guide pins

Guide pins of the connector identify the mating receptacle. Position them as below.

Table 4-4 Guide pins and connectors CN-C2, CN-C3, CN-C4, CN-C5

Connector / Guide Pin	CN-C2	CN-C3	CN-C4	CN-C5	Positioning Tool
Guide Pin A (Large)	1	2	1	3	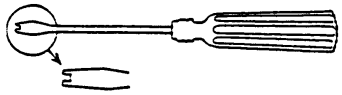
Guide Pin B (Small)	1	1	1	1	Type : 10-910-0179-0

Clamping the cable

Clamp the anticorrosive sheath of the cable.

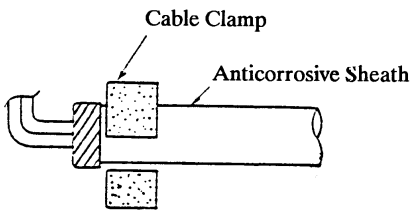

Figure 4-20 Clamping the cable

Fabricating cable connected to terminal board TB-D1 in Raise/ Lower Control Box

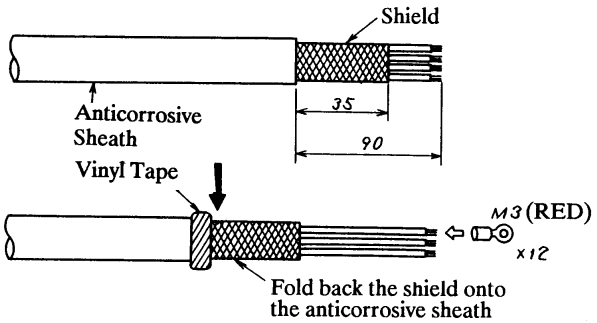

Figure 4-21 Fabricating cable connected to terminal board TB-D1 in Raise/Lower Control Box

Fabricating cable 10S1259 (connected to terminal board TB-D2 in Raise/Lower Control Box)

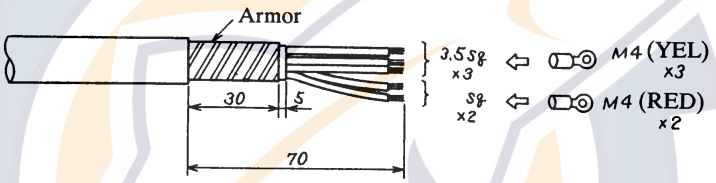

Figure 4-22 Fabricating cable 10S1259

4.5 Connection of Transducer Cables

The transducer cables are supplied with connectors. Plug them into the receptacles in the receiver unit, referring to the stickers on the cables.

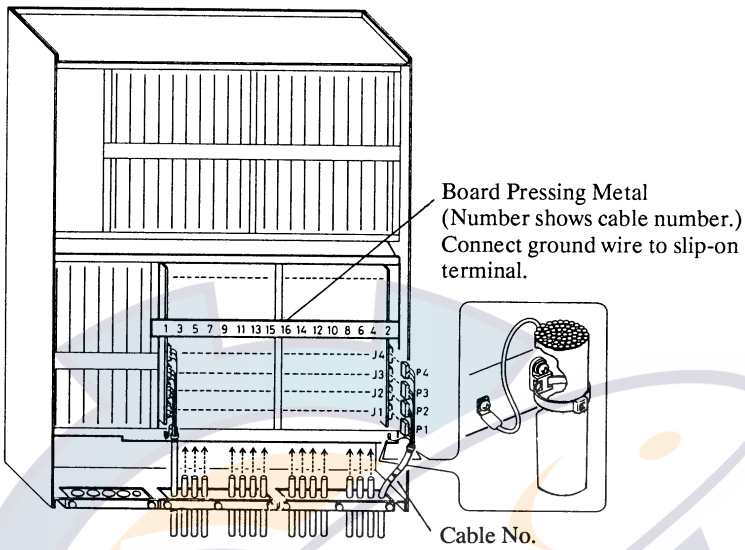

Figure 4-23 Receiver unit, rear view

Lead the cable into the receiver unit and clamp it as follows.

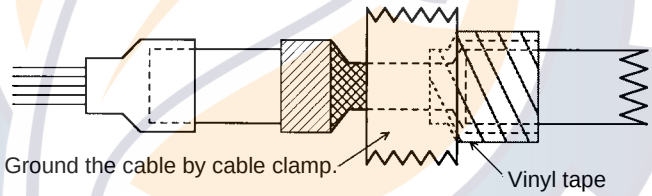

1. Use the connector puller (supplied) to unplug connectors.

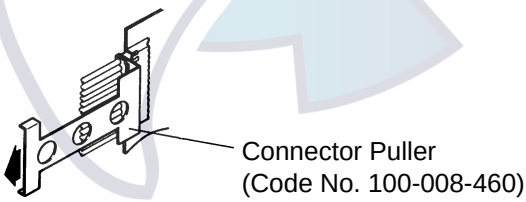

2. When one or some of the lead wires are severed near a connector, cut off all lead wires connected to the connector and solder the "XH connector assembly" (type 10-145 (13P), supplied as spare parts).

4.6 Connection of Interface Unit CS-120A

With connection of navigator, the Interface Unit CS-120A and electronic fishing equipment, the function of the CSH-23/24 series is expanded to include true motion presentation, target lock, echo sounder picture, FNZ marker presentation and digital indication of position, water temperature and depth. This chapter provides the information for interfacing the CSH-23/24 series with external equipment.

Connections for true motion and target lock

Heading (digital) and speed (200 pulses/nm) data are required to provide the true motion and target lock functions. Both data are fed to the display unit via Interface Unit CS-120A.

Basically, there are two methods to feed the data:

- Heading data is fed to J205 from A/D Converter AD-100 and the speed data to J206 from the electromagnetic speed log.
- Both heading and speed data are fed to J207 from the CIF line of the CI-30/50/60.

Select one of the methods depending on the equipment installed. When both methods are available, it is recommended to connect both and select one by the DIP switch inside the CS-120A.

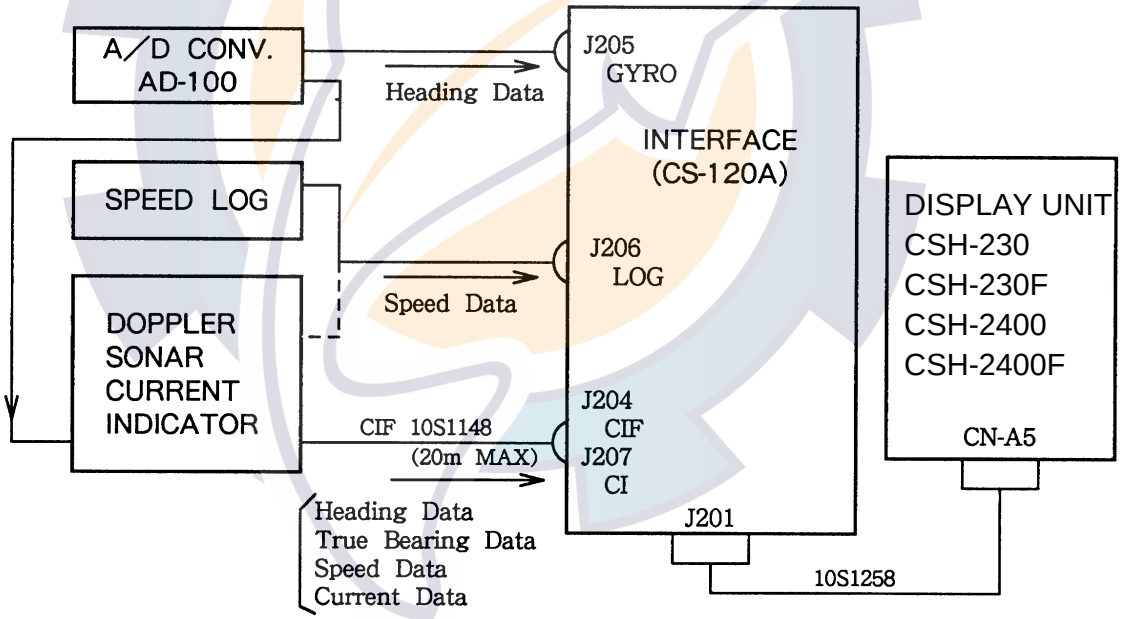

Figure 4-24 Connection of external equipment to Interface Unit CS-120A

Note 1: AD-100 outputs two types of data. Do not use data for radars (25 ms interval).

Note 2: 200 pulses/mile ship's speed data can be taken from a doppler sonar current indicator.

Connections for ES picture and FNZ markers

To provide echo sounder picture and FNZ markers, connect echo sounder to J203 and net sonde to J202. The signals applied to J202 and J203 are

J202: Net sonde signal and trigger signal (keying pulse of echo sounder). A white line signal from an echo sounder may be additionally applied as described on the next page if the digital depth data is not available on J204.

J203: Echo signal and keying pulse from an echo sounder.

Connection 1: Displaying echo sounder picture

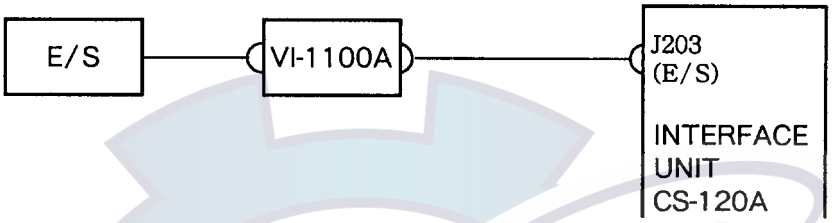

Figure 4-25 Connections for displaying ES picture

Connection 2: Displaying echo sounder picture and FNZ markers by one echo sounder

This method is used when the net sonde is installed and both echo sounder and net sonde signals are taken from the same echo sounder. The net sonde signal is applied to both J202 and J203.

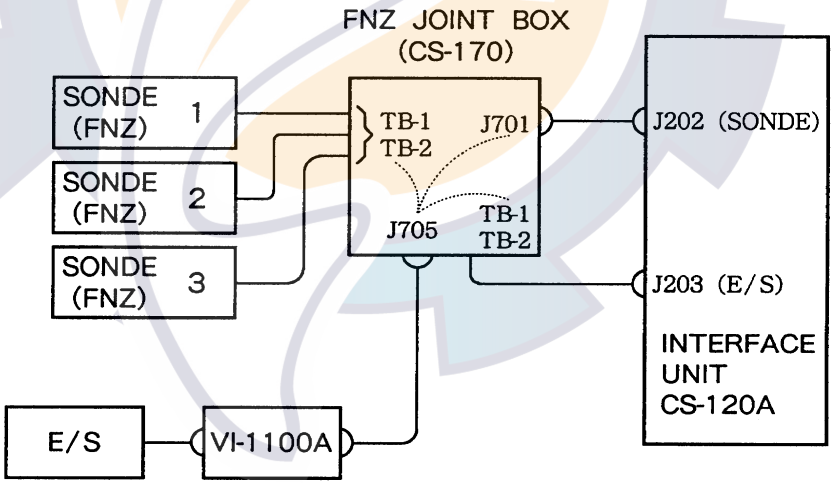

Figure 4-26 Connections for displaying echo sounder picture and FNZ marker by one echo sounder

Connection 3: Displaying echo sounder picture and FNZ markers by separate echo sounders

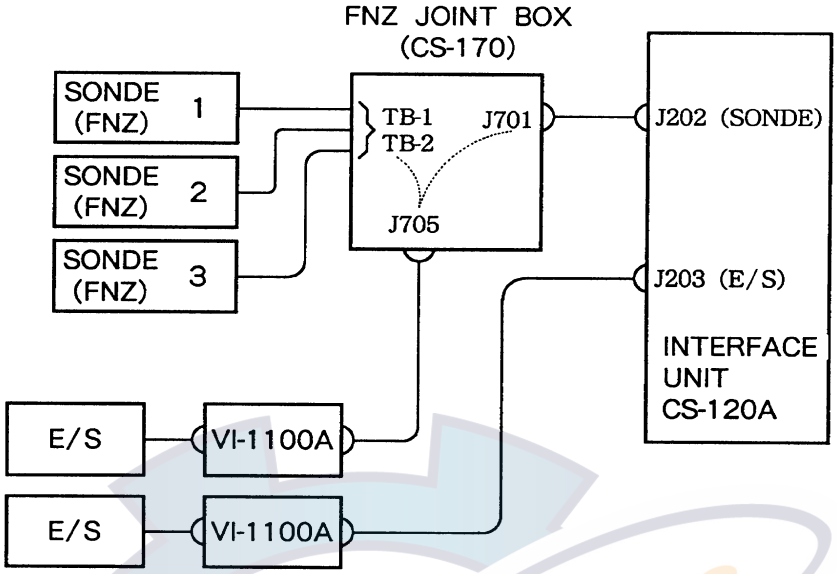

Figure 4-27 Connections for displaying echo sounder picture and FNZ markers by separate echo sounders

Connections for digital indication of position, water temperature and depth

The data for these readouts are taken from the equipment shown in the table below and input to J204. When data from multiple equipment are input, use Hybrid Interface IF-5000 to feed the data serially.

Table 4-5 Data and source

Data	Data Source
Position	Loran C navigator, Sat-Nav, GPS navigator
Water Temperature	Temperature Indicator T-2000/TI-20, nav equipment connected to temperature sensor
Depth	Color video sounder, Echo Sounder FE-822

Note: When a color video sounder which has digital depth data output is not available, the white line signal of a paper recording echo sounder can be used to provide digital depth readout.

Connect the echo sounder as shown below or as shown in connection 2 or 3 in paragraph 5.2 and operate the echo sounder front panel controls so that the white line is effected on the seabed contour.

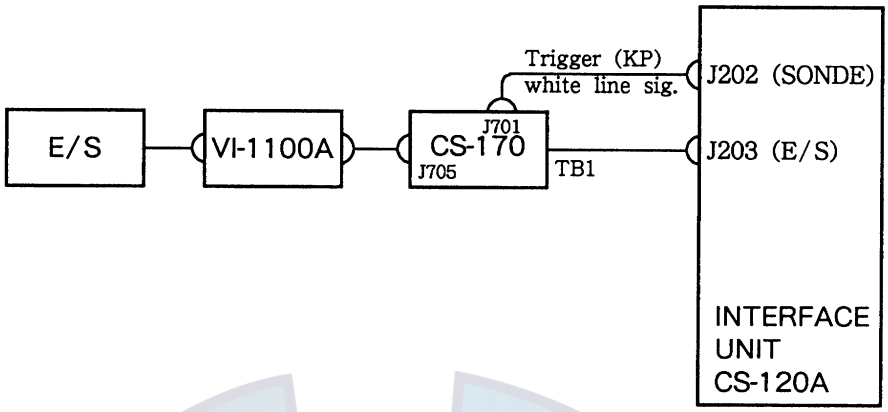

Figure 4-28 How to output white line signal of paper recording echo sounder

Wiring

Connect referring to the Interconnection Diagram at the back of this manual.

Wire Symbol	Meaning
◯	Vinyl sheath wire
◎	Shielded wire
⬭	Twisted pair wire

02S8040

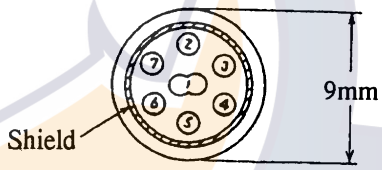

No.	Color
1	WHT/BLK
2	BLK
3	PNK
4	GRN
5	ORG
6	YEL
7	RED

CO-SPEVV-SB-C 0.2 sq. 5P

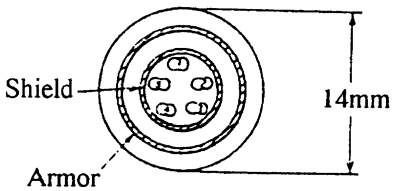

No.	Color
1	YEL/BLK
2	YEL/WHT
3	YEL/RED
4	YEL/BLU
5	YEL/GRN

Figure 4-29 Configuration of cables 02S8040, CO-SPEVV-SB-C 0.2 sq. 5P

Fabrication, assembling 10P and 7P connectors

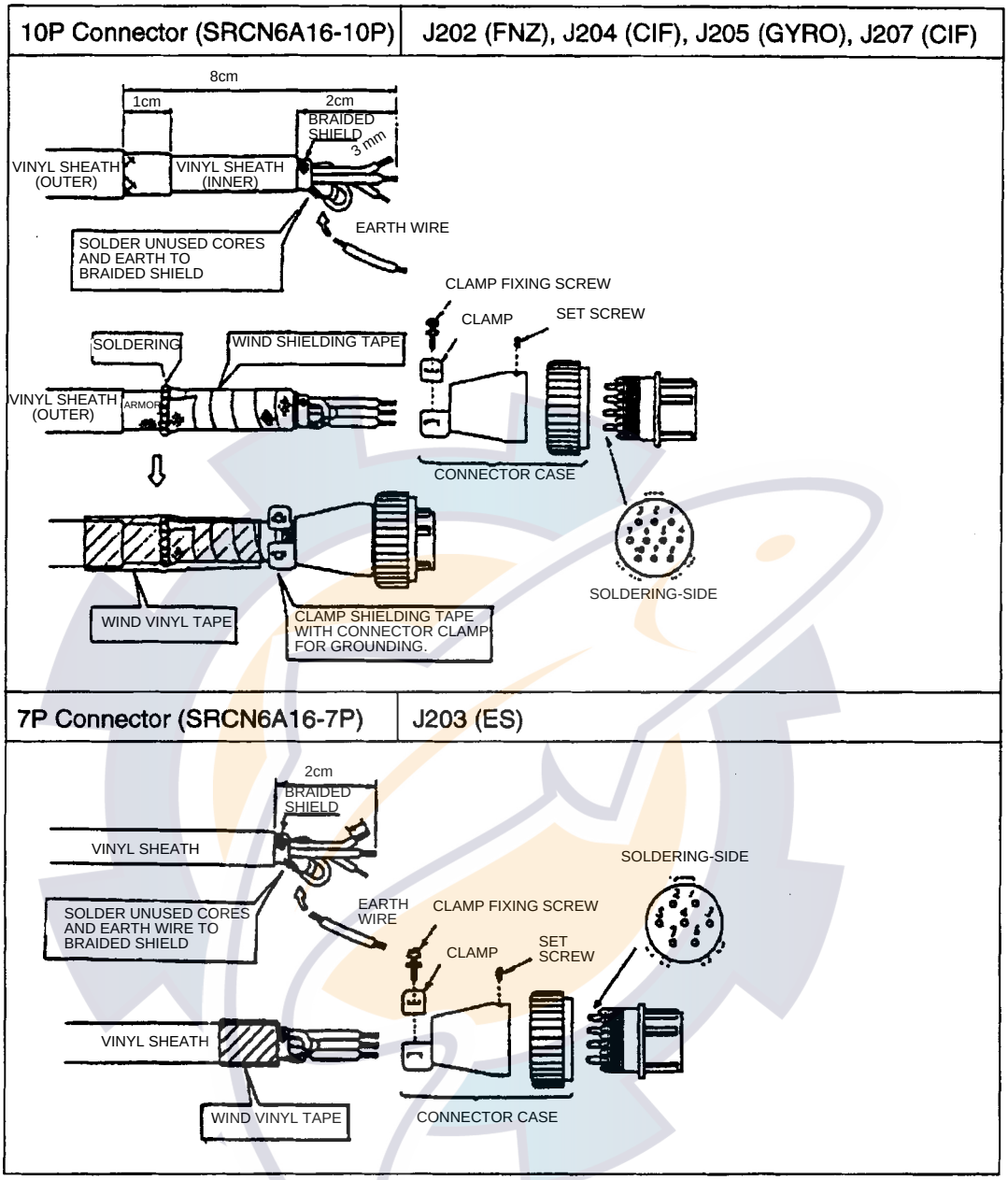

Figure 4-30 Fabrication of 10P, 7P connectors

4.7 Connection of Sub-display Unit CSH-236/236F (Option)

The Sub-Display Unit CSH-236/236F is the same as the Display Unit CSH-230/230F in terms of outline dimension and control panel layout. It controls the sonar at a place remote from the display unit while observing picture on the screen. One sub-display unit can be connected to three display units.

Note: The Sub-Display Unit can be connected to CSH-23/23F only.

Connections

Refer to the interconnection diagram at the end of this manual.

Note: One sub-display unit can be connected to three sonars, but different models cannot be connected.

DIP switch setting

Set DIP switch S1 on the RDCB Board (10P6724) in the sub-display unit as follows:

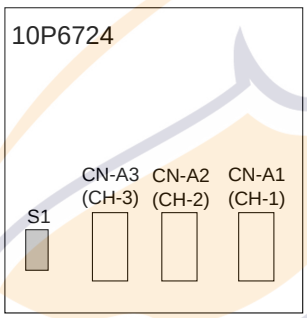

SW No.	Used for	Function
1 2 3	Display unit on CH-1 Display unit on CH-2 Display unit on CH-3	**ON:** Turning on sub-display unit automatically turns on display unit. (Don't set OFF because the system doesn't work.)
4 5 6	Display unit on CH-1 Display unit on CH-2 Display unit on CH-3	**ON:** Turning on display unit automatically turns on sub-display unit. **OFF:** Sub-display unit is not turned on when display unit is turned on.
7	Not used.	Used in remote display unit. Set to ON in sub-display unit.
8	Not used.	

Figure 4-31 DIP switch setting on RDCB board in the sub-display unit

Note: To have both the display unit and sub-display unit turned on when either unit is turned on, turn on SW #1 and #4.

4.8 Connection of Remote Display Unit CSH-106 (Option)

The remote display unit can be connected to three display units, and one of them is selected on the remote display unit. Operating controls provided on the remote display unit are power on/off switch, brilliance control and channel selector, which selects one of the three display units.

Note: The remote-Display Unit can be connected to CSH-23/23F only.

Connections

For connection of both display and remote display units, refer to interconnection diagram at the end of this manual.

Note: The display unit has two ports: one for sub-display unit and the other for remote display unit. When the remote-display unit is not used, both ports can be connected to remote display units.

DIP switch setting

Set DIP switch S1 on the RDCB board 10P6724 in the remote display unit.

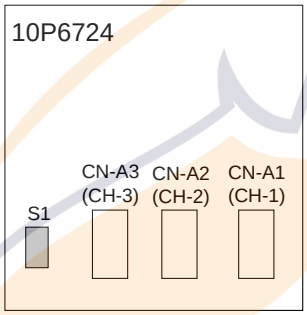

SW No.	Used for	Description
1 2 3	Display unit on CH-1 Display unit on CH-2 Display unit on CH-3	Not used
4 5 6	Display unit on CH-1 Display unit on CH-2 Display unit on CH-3	Turn ON when display unit is connected and OFF when there is no display unit.
7	Remote ON/OFF.	**ON:** Remote on/off of remote display unit from display unit. When one of all of the connected display units is turned on/off, remote display unit turns on/off. **OFF:** Remote display is turned on/off by its ON/OFF switch. *Note: The remote display can not be turned on unless display unit is on.*
8	Not used.	

Figure 4-32 DIP switch setting on the RDCB board

4.9 Synchronizing Transmission with Other Sonars, Echo Sounders

To synchronize the transmission of the CSH-23/24 series sonars to that of other sonars or echo sounders, wire units as follows.

Connections

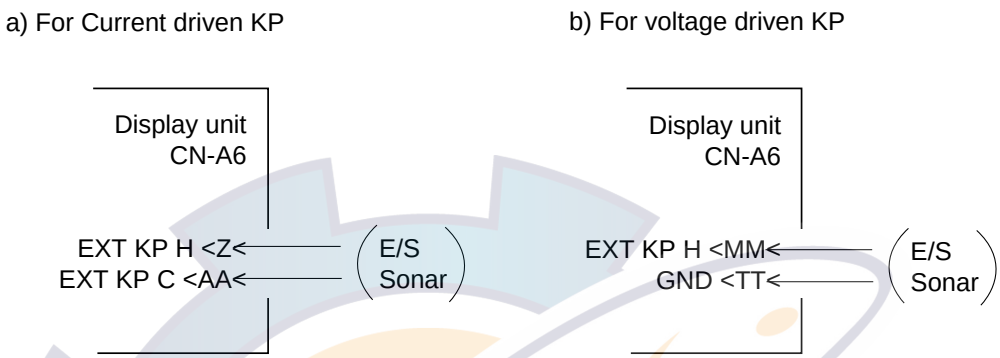

Figure 4-33 Connections for synchronizing transmission with echo sounder having current driven KP, voltage driven KP

Note: To output KP to other sonar or echo sounder, wire units as follows.

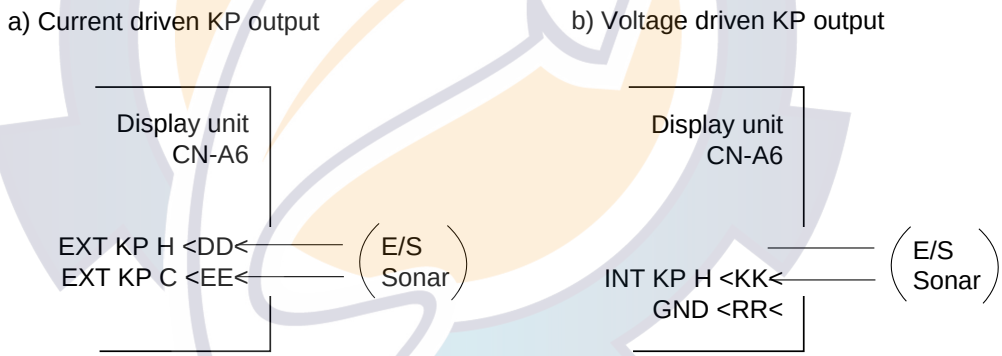

Figure 4-34 Connections for outputting KP to other sonar or echo sounder

Menu setting

Set polarity of the KP on the INIT SET/TEST menu. Set transmission cycle to 0 on data setting window. Refer to the operator's manual for operation on the menu.

4.10 Interlocking Operation with Other Sonar

Functions (range, tilt, fish mark, etc.) and remote control may be mutually interlocked with those on other sonars (CSH-23/24/73/83/84). For example, if the range is interlocked, changing the range in one sonar automatically sets the other sonar to the same range. The functions to be interlocked can be selected on the SYSTEM menu. See the operator's manual for further details.

Connections for interlocking functions

Two sonars

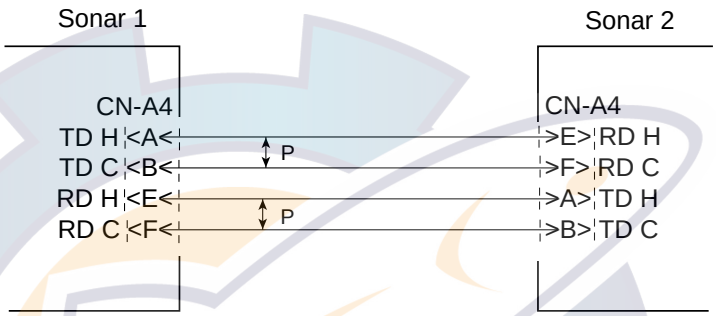

Figure 4-35 connections for interlocking function of two sonars

Three sonars

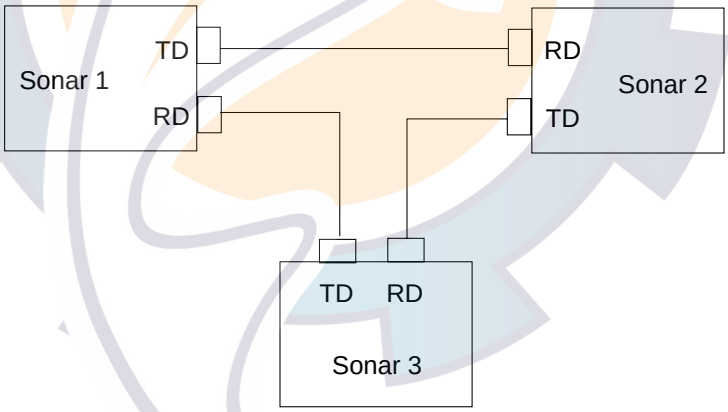

Figure 4-36 Connections for interlocking functions of three sonars

DIP switch setting

Set ID code on DIP switch #1 to #3 on main panel. Any code is acceptable, provided that it is not the same as that set on the other sonar.

Connections for interlocking remote control

To control multiple display units by one remote control box, wire units as follows.

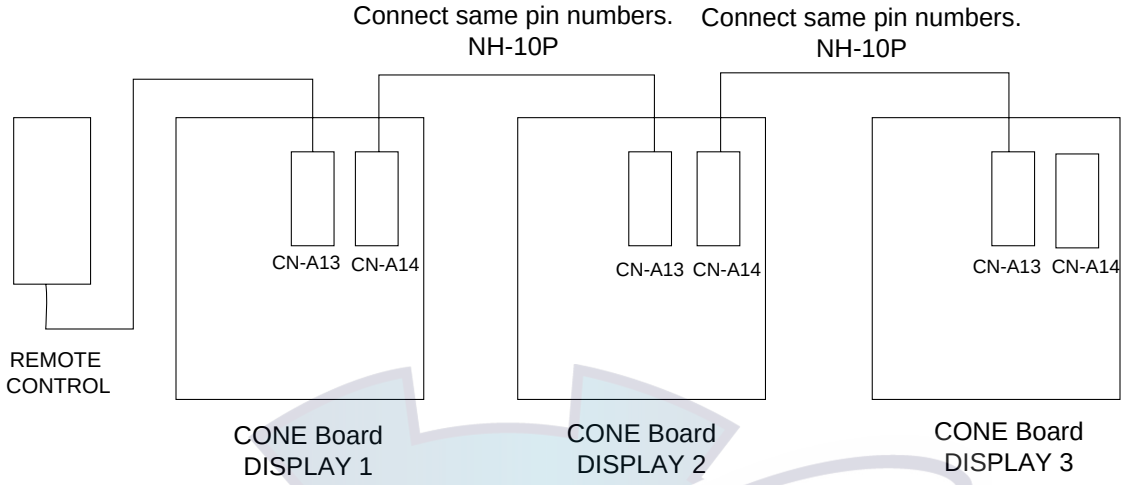

Figure 4-37 Connections for interlocking remote control

5. CHANGING POWER SPECIFICATIONS

The display unit is set at the factory for connection to a ship's mains of 110 VAC or 220 VAC. To power it by 100 VAC or 220 VAC, use step-down transformer PT-400, change the transformer taps on the power supply unit as below and connect the ship's mains directly.

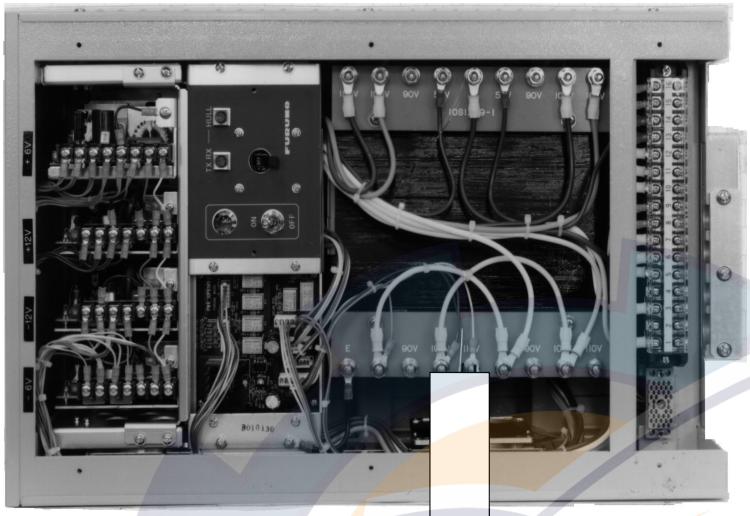

The power supply unit has been set for 100 VAC when delivered.

F Photo No.2017

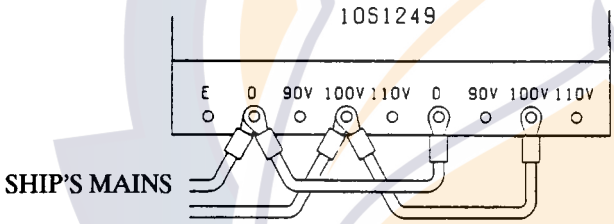

For 100VAC Ship's Mains

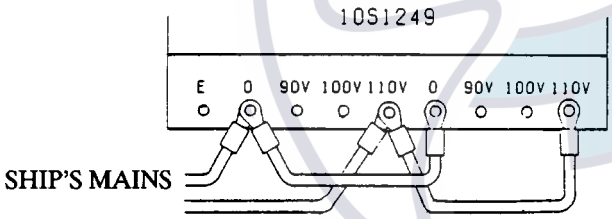

For 110VAC Ship's Mains

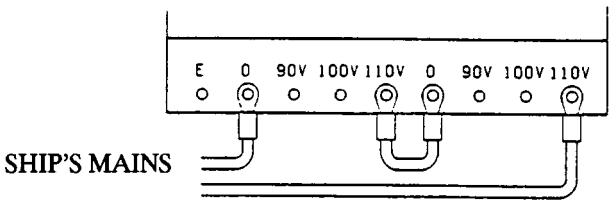

For 220VAC Ship's Mains

Figure 5-1 Tap connections on the transformer in the power unit

6. ADJUSTMENT AND CHECK

6.1 Hull Unit Check

1. Press the ON switch to turn on the equipment. Confirm that the lamps above the ON and ⬆ switches light.

2. Confirm that the 5V and UP lamps on the raise/lower control box are lit.

3. Remove the cover of the raise/lower control box and check the following voltages:

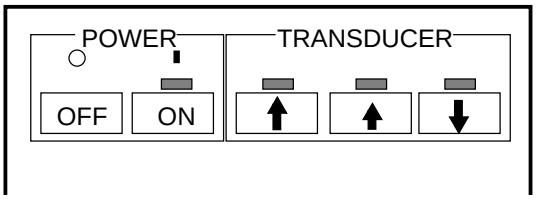

Figure 6-1 Display unit front panel

Terminal	Terminal No.	Voltage
TB-D1	⑦ – ⑧	+12 V
TB-D2	① – ② ② – ③ ① – ③	180 VAC 180 VAC 360 VAC

4. In the raise/lower control box, turn the TEST/NORMAL switch to TEST. Press the ⬇ switch to confirm that the transducer lowers. Also, while the transducer is being lowered, check that the MD LED lights when the MD L. SW kicks. Note that the MD L. SW does not stop the transducer when the TEST/NORMAL switch is in the TEST position.

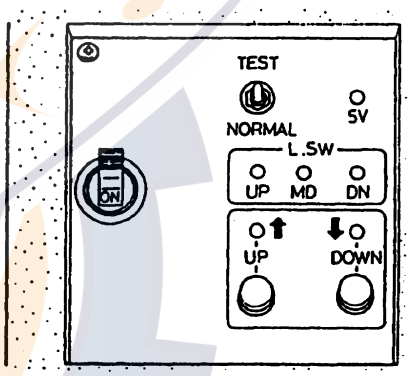

Figure 6-2 Raise/Lower control box

5. Press and release the ⬇ switch. Confirm that the transducer stops at the moment the switch is released.

6. Press the ⬇ switch again. Confirm that the transducer stops at the moment the lower limit switch kicks.

7. Confirm that the ⬆ switch operates in a similar manner.

8. Check that LEDs on the panel of the raise/lower control box light as follows:

   1) UP, MD and DN LEDs light when corresponding limit switch kicks.
   2) UP and DOWN LEDs light while UP and DOWN switches are pressed and extinguish when switches are released.

9. Set the TEST/NORMAL switch to NORMAL.

10. At the display unit, press the ⬇ (mid position) switch. Confirm that the lamp above the switch blinks while the transducer is being lowered, a short beep sounds when the mid limit switch kicks, and the lamp lights when the transducer is fully lowered.

11. Press the ⬇ switch. Confirm that the lamp above the switch blinks while the transducer is being lowered, a short beep sounds when the mid limit switch kicks, and the lamp lights when the transducer is fully lowered.

12. Press the ⬆ switch. Confirm that the lamp above the switch blinks while the transducer is being raised, a short beep sounds when the mid limit switch kicks, and the lamp lights when the transducer is fully raised.

13. Press the OFF switch. Confirm that the transducer is completely retracted and then the power is turned off.

14. With the transducer lowered, confirm that the transducer is raised when ⬆ or OFF is pressed.

6.2 Heading Adjustment

When the BOW mark on the flange of the hull unit cannot be directed toward ship's bow adjust the heading so an echo which is dead ahead appears dead ahead on the display.

1. Locate a target in the bow direction (buoy, for example) and display it on a near range. If the target appears at 12 o'clock the heading alignment is correct. If it does not go to step 2.

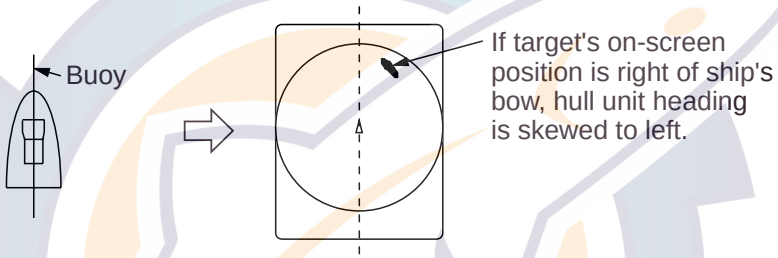

Figure 6-3 Heading adjustment

2. Turn on the power while pressing and holding down the MENU key. The INIT SET/TEST menu appears.

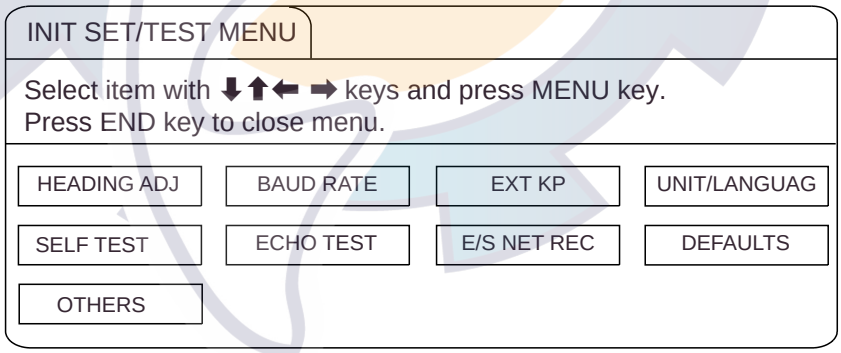

Figure 6-4 INIT SET/TEST menu

3. Select HEADING ADJ.

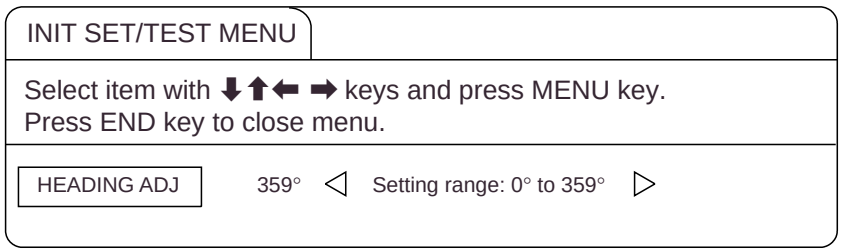

Figure 6-5 HEADING ADJ menu

4. Enter heading correction with ⬅ or ➡, referring to the table below for guidance.

Target Location	Correction Setting
Target displaced 30° to port	Set to 30° .
Target displaced 30° to starboard	Set to 330° .

6.3 DIP Switch Setting in the Display Unit

Set the DIP switch on the display unit, referring to the table shown below.

1. Remove six screws from the main panel.
2. Unplug four connectors.
3. Set DIP switch.
4. Reassemble display unit.

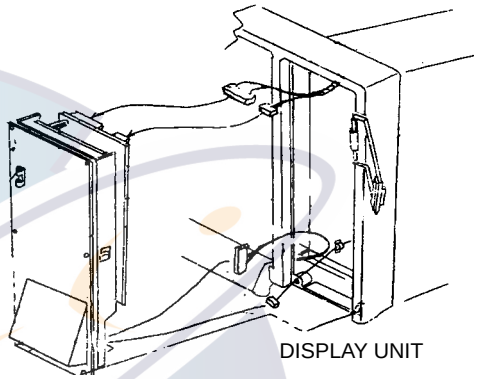

Figure 6-6 How to remove main panel from display unit

PIF Board (10P6713)

Item	SW No.	Setting				
ID Code for Interlock Function	1	Set ID code for interlock operation of CSH-21/71/81/82/53/23/73/83 sonar. Any code is acceptable unless it is used in other interlocked sonars.				
	2					
	3					
Unit Code	4	OFF	ON	ON	OFF	ON
	5	OFF	OFF	ON	OFF	ON
	6	OFF	OFF	OFF	ON	ON
	Unit	CSH-58 (28 kHz) CSH-53 (28 kHz)	CSH-53 (55 kHz)	CSH-23/24	CSH-73/83/84	CSH-23F/23FL/ 24F/24FL
EEPROM Check	7	ON	Check OFF	OFF	Check ON	
Stand Alone	8	For factory use. Set to ON always.				

PND Board (10P6714)

Item	SW No.	Setting	
Display unit setting	3	OFF	For 21" CRT display unit (CSH-24/24F/24FL/84)
		ON	For 15" CRT display unit (CSH-23F/23FL/24F/24FL)

6.4 Setting and Adjustment of the Interface Unit CS-120A

DIP switch setting

Navigation data and fishing data input from external equipment can be turned on or off by DIP switch DP-1 in the Interface Unit CS-120A.

DP-2

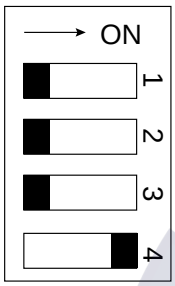

Standard Setting

DP-1

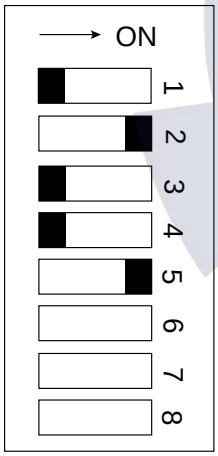

S1
S2
S3
S4
S5

Own ship's speed and bearing (for courseline plotting, true motion, target lock, etc.)

Input Device	S1	S2
Gyrocompass, Speed log	OFF	OFF
GPS or DR (NOTE 1)	ON	OFF
Current Indicator	OFF	ON
DR or Current Ind. (NOTE 2)	ON	ON

Select navigation device which feeds navigation data for drawing ship's track by S1 and S2.

NOTE1: GPS has priority. Switched automatically from GPS to DR when GPS is absent for more than 61 seconds or ship's speed measured with GPS is 0.2 kts or less.

If DR is not available when switched from GPS to DR, heading readout is fixed at 9 degrees and ship's track is plotted by using the last GPS data obtained before switching to DR. If you still require speed/heading data from GPS even though ship's speed is less than 0.2 kt, set the GPS format to DR. Note however that the heading direction becomes erratic if the ship's speed is less than 0.2 kts.

NOTE 2: Use this setting when both DR and current indicator are available. NormallyDR data has highest priority, and is switched to current indicator data if the DR data is absent for more than 61 seconds. The heading data for the bearing scale is always provided from the current indicator. When DR data is taken from GPS be sure to set GPS output format to "DR." GPS with no "DR" output format cannot be used.

Own ship's position (L/L or TD)

Input Device	S3	S4
Loran C	OFF	OFF
GPS or DR (See NOTE)	ON	OFF

NOTE: Use this position for GPS or DR. The GPS data has priority.

Depth (Echo Sounder, Color Video Sounder, etc.)

Input Device	S5
Echo Sounder (NOTE 1)	OFF
CIF format (NOTE 2)	ON

NOTE 1: Use this position for white line pulse when the depth data is taken from an echo sounder which has no digital depth output.

NOTE 2: Use this position when the depth data is taken from an echo sounder with digital data output (FE-822, FCV, ED-202) or IF-3000/IF-5000.

Interface unit adjustment

If the E/S picture on the screen does not have the desired coloration, perform the adjustment as follows with the preset potentiometers on the I/O board in the interface unit.

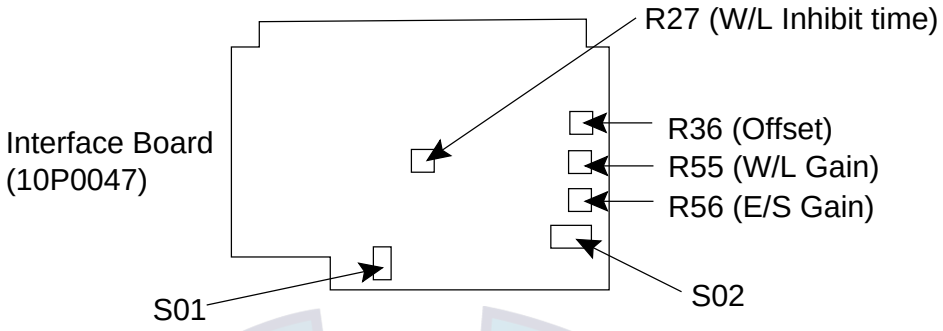

Figure 6-7 I/O board

S02 Mode: Selects the signal mode (AC or DC) according to the combined echo sounder connected.

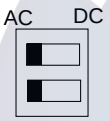

S01 FNZ Marker: The FNZ marker is plotted on the echo sounder picture with this switch turned on. Factory setting is the “ON” position.

Adjustment of signal level (R36, R56)

Prior to adjustment, verify that the output level of the E/S interface (VI-1100A) satisfies the following ratings.

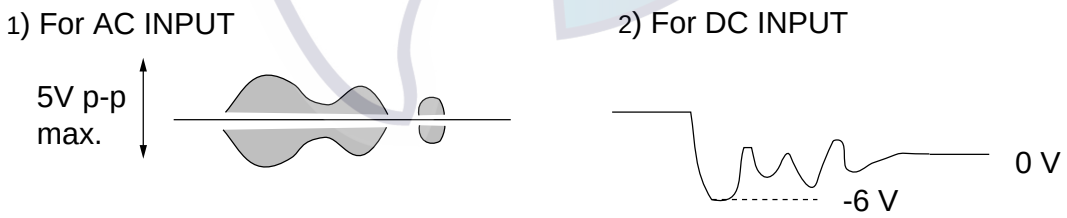

Figure 6-8 AC/DC input signal

If not, adjust the potentiometers in the VI-1100A referring to the installation manual for FCV series. S02 is usually set to the “AC” position at the factory.

Procedure

(A) Set the MODE switch to “E/S”.

(B) Turn the E/S gain and E/S offset potentiometers (R56 and R36) so that the color gradation of the E/S picture on the screen appears similar to the intensity gradation of the combined E/S echogram.

Case (A) The E/S picture on the CSH-23/24 series is comparatively higher in sensitivity than that of the paper echogram.

Remedy: Turn E/S offset potentiometer so that weak signals painted in blue or light blue are displayed in deep blue.

Case (B) The E/S picture on the CSH-23/24 series is comparatively lower in sensitivity than that of the paper echogram.

Remedy: Turn the E/S gain potentiometer CW until a picture of even quality is obtained.

Adjustment of white line inhibit time (R27)

In case digital depth data is not combined with the CS-120A, the white line signal from the echo sounder is used for depth information.

Potentiometer R27 cancels the white line pulse for about 10 ms after transmission to avoid false depth indication caused by unwanted noise in short ranges.

Readjustment of potentiometer R27 is not required as long as CSH-23/24 series indicates the correct depth. If does not, however turn R27 CW about 90 degrees.

Adjustment of white line output level (R55)

Improper setting of potentiometer R55 causes the seabed line to be painted in deep blue due to the white line pulse. Adjust it so that the seabed is painted in reddish brown.

FURUNO

CODE NO.	000-068-909	10BW-X-9301 -5
TYPE	SP10-01700	BOX NO. P

SHIP NO.	SPARE PARTS LIST FOR	U S E	SETS PER VESSEL
	カラースキャニングソナー COLOR SCANNING SONAR	CSH-21・K/22/23・K/251W/261W 271W/281W/281S/288W/24	

ITEM NO.	NAME OF PART	OUTLINE	DWG. NO. OR TYPE NO.	QUANTITY WORKING PER SET	QUANTITY WORKING PER VES	QUANTITY SPARE	REMARKS/CODE NO.
1	管入りヒューズ FUSE	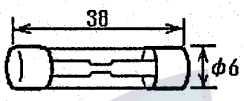	FGB01 30A AC250V	1		2	指示装置用 FOR DISPLAY UNIT 000-549-086
2	ヒューズ FUSE	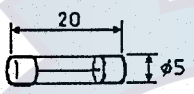	FGMA 3A 125V(UL)	1		2	指示装置用 FOR DISPLAY UNIT 000-111-848
3	ヒューズ FUSE	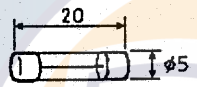	FGMA 1A AC125V	1		2	指示装置用 FOR DISPLAY UNIT 000-126-840
4	ヒューズ FUSE	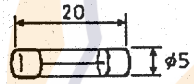	FGMA 2A AC125V	2		4	指示装置用 FOR DISPLAY UNIT 000-126-841
5	ヒューズ FUSE	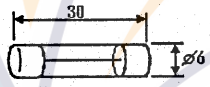	FGAO 10A AC125V	1		5	指示装置用 FOR DISPLAY UNIT 000-126-852
6	XHコネクタ組品 XH CONNECTOR ASSY.		10-145(13P)	1		1	受信装置用 FOR RECEIVER UNIT 006-947-380
7	コネクタ抜き工具 CONNECTOR PULLER	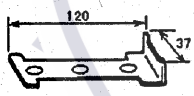	10-026-6901-0		1		受信装置用 FOR RECEIVER UNIT 100-008-460
8	ヒューズ FUSE	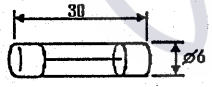	FGBO-A 2A AC125V	16		20	送振装置用 FOR TRANSMITTER UNIT 000-549-062

MFR'S NAME	FURUNO ELECTRIC CO.,LTD	DWG NO.		1/1

(略図の寸法は、参考値です。 DIMENSIONS IN DRAWING FOR REFERENCE ONLY.)

C1286-P01- F

FURUNO

CODE NO.	000-068-910	10BW-X-9302 -4
TYPE	SP10-01800	BOX NO. P

SHIP NO.	SPARE PARTS LIST FOR	U S E	SETS PER VESSEL
	CSH-21F・22F 23F・24F/FL カラースキャニングソナー COLOR SCANNING SONAR		

ITEM NO.	NAME OF PART	OUTLINE	DWG. NO. OR TYPE NO.	QUANTITY WORKING PER SET	QUANTITY WORKING PER VES	QUANTITY SPARE	REMARKS/CODE NO.
1	ヒューズ FUSE	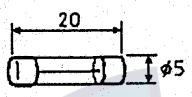	FGMA 3A 125V(UL)	1		2	指示装置用 FOR DISPLAY UNIT 000-111-848
2	ヒューズ FUSE	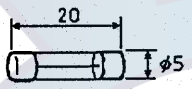	FGMA 1A AC125V	1		2	指示装置用 FOR DISPLAY UNIT 000-126-840
3	ヒューズ FUSE	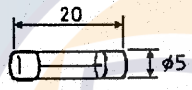	FGMA 2A AC125V	2		4	指示装置用 FOR DISPLAY UNIT 000-126-841
4	ヒューズ FUSE	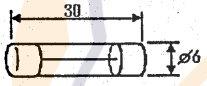	FGAO 10A AC125V	1		5	指示装置用 FOR DISPLAY UNIT 000-126-852
5	管入りヒューズ FUSE	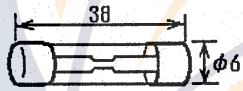	FGB01 30A AC250V	1		2	指示装置用 FOR DISPLAY UNIT 000-549-086
6	XHコネクタ組品 XH CONNECTOR ASSY.	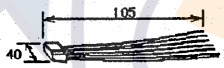	10-145(13P)	1		1	受信装置用 FOR RECEIVER UNIT 006-947-380
7	コネクタ抜き工具 CONNECTOR PULLER	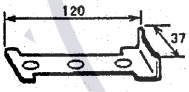	10-026-6901-0		1		受信装置用 FOR RECEIVER UNIT 100-008-460
8	ヒューズ FUSE	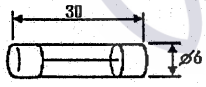	FGBO 5A AC250V	16		20	送振装置用 FOR TRANSMITTER 000-549-022

MFR'S NAME	FURUNO ELECTRIC CO.,LTD	DWG NO.		1/1

(略図の寸法は、参考値です。 DIMENSIONS IN DRAWING FOR REFERENCE ONLY.)

C1287-P01- E

FURUNO

CODE NO.	006-989-010	10BW-X-9401 -5
TYPE	CP10-02710	1/4

工事材料表

INSTALLATION MATERIALS

CSH-21・K・F/22・F
23・K・F/251W/261W
271W/281W/281S/288W

カラースキャニング ソナー

COLOR SCANNING SONAR

番号 NO.	名称 NAME	略図 OUTLINE	型名／規格 DESCRIPTIONS		数量 Q'TY	用途／備考 REMARKS
1	アース線組品 GROUNDING WIRE		CS-120-C	CODE NO. 006-937-990	1	外部インターフェース工材 FOR INTERFACE UNIT
2	コネクタ CONNECTOR	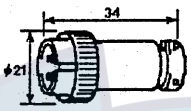	RM15TP-2PA	CODE NO. 000-503-314	1	外部インターフェース工材 FOR INTERFACE UNIT
3	コネクタ CONNECTOR	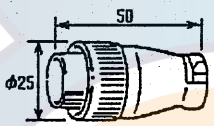	SRCN6A16-10P	CODE NO. 000-508-663	4	外部インターフェース工材 FOR INTERFACE UNIT
4	コネクタ CONNECTOR	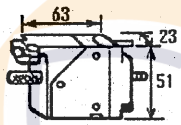	54-038-000-601/SC	CODE NO. 000-132-081	1	外部インターフェース工材 FOR INTERFACE UNIT
5	コネクタ CONNECTOR	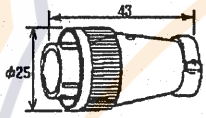	SRCN6A16-7P	CODE NO. 000-508-662	1	外部インターフェース工材 FOR INTERFACE UNIT
6	コンタクト CONTACT PIN	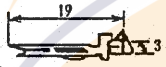	60-8017-0313-00-339	CODE NO. 000-519-542	38	外部インターフェース工材 FOR INTERFACE UNIT
7	貼りマーク. J201. STICKER. J201.	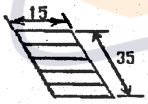	10-018-5022	CODE NO. 181-850-220	1	外部インターフェース工材 FOR INTERFACE UNIT
8	コネクタ CONNECTOR	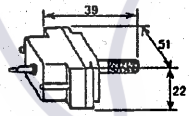	00-8016-038-313761HV	CODE NO. 000-127-234	1	外部インターフェース工材 FOR INTERFACE UNIT
9	コネクタ CONNECTOR	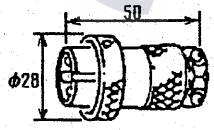	NCS-252-P	CODE NO. 000-506-501	1	指示装置工材 FOR DISPLAY UNIT
10	コネクタ CONNECTOR	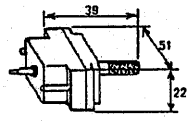	00-8016-038-313761HV	CODE NO. 000-127-234	1	指示装置工材 FOR DISPLAY UNIT

C1286-M01- G

FURUNO ELECTRIC CO., LTD

（略図の寸法は、参考値です。 DIMENSIONS IN DRAWING FOR REFERENCE ONLY.）

FURUNO

CODE NO.	006-989-010	10BW-X-9401 -5
TYPE	CP10-02710	2/4

工事材料表

INSTALLATION MATERIALS

CSH-21・K・F/22・F
23・K・F/251W/261W
271W/281W/281S/288W

カラースキャニングソナー

COLOR SCANNING SONAR

番号 NO.	名称 NAME	略図 OUTLINE	型名／規格 DESCRIPTIONS	数量 Q'TY	用途／備考 REMARKS
11	クーラーパテ COOLER PUTTY	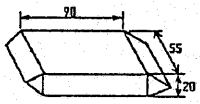	200Gイリ シロイロ CODE NO. 000-807-621	2	指示装置工材 FOR DISPLAY UNIT
12	イラックスチューブ(A) INSULATION TUBE	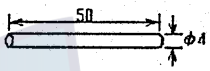	4.0X0.3 キイロ *5CM* CODE NO. 000-100-923	1	指示装置工材 FOR DISPLAY UNIT
13	アース板 COPPER STRAP	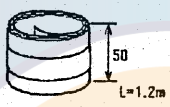	WEA-1004-0 CODE NO. 500-310-040	1	指示装置工材 FOR DISPLAY UNIT
14	コネクタ CONNECTOR	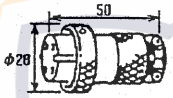	NCS-253-P CODE NO. 000-506-503	1	指示装置工材 FOR DISPLAY UNIT
15	コネクタ CONNECTOR	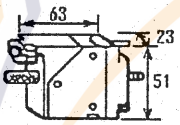	54-038-000-601/SC CODE NO. 000-132-081	3	受信装置工材 FOR RECEIVER UNIT
16	アース板 COPPER STRAP	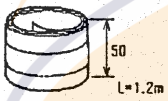	WEA-1004-0 CODE NO. 500-310-040	1	受信装置工材 FOR RECEIVER UNIT
17	コンタクト CONTACT PIN	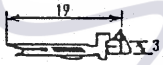	60-8017-0313-00-339 CODE NO. 000-519-542	114	受信装置工材 FOR RECEIVER UNIT
18	ミガキ平座金 FLAT WASHER		M10 SS41 MFZN2-B CODE NO. 000-864-191	2	受信装置工材 FOR RECEIVER UNIT
19	シールドスリーブ SHIELD SLEEVE	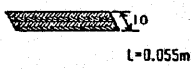	ZS-06H *0.055M* CODE NO. 000-807-634	20	受信装置工材 FOR RECEIVER UNIT
20	コネクタ CONNECTOR	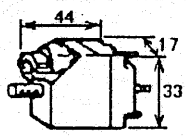	00-8016-020-313-703V CODE NO. 000-111-143	1	受信装置工材 FOR RECEIVER UNIT

C1257-M02- C

FURUNO ELECTRIC CO., LTD

(略図の寸法は、参考値です。 DIMENSIONS IN DRAWING FOR REFERENCE ONLY.)

FURUNO

CODE NO.	006-989-010	10BW-X-9401 -5
TYPE	CP10-02710	3/4

工事材料表

INSTALLATION MATERIALS

CSH-21・K・F/22・F
23・K・F/251W/261W
271W/281W/281S/288W

カラースキャニングソナー

COLOR SCANNING SONAR

番号 NO.	名称 NAME	略図 OUTLINE	型名／規格 DESCRIPTIONS		数量 Q'TY	用途／備考 REMARKS
21	アイボルト EYE-BOLT	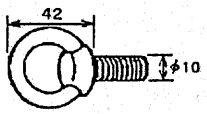	M10 SS41 MFZ12	CODE NO. 000-862-506	2	受信装置工材 FOR RECEIVER UNIT
22	P貼りマーク. 11. P STICKER. 11.	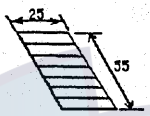	10-026-0619-0	CODE NO. 100-014-880	1	受信装置工材 FOR RECEIVER UNIT
23	圧着端子 CRIMP-ON LUG	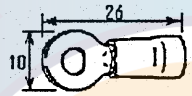	FV5. 5-4	CODE NO. 000-538-123	5	上下装置工材 FOR HULL UNIT
24	圧着端子 CRIMP-ON LUG	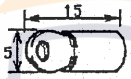	FV1. 25-3. 7 アカ	CODE NO. 000-108-699	15	上下装置工材 FOR HULL UNIT
25	圧着端子 CRIMP-ON LUG	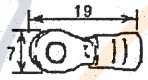	FV1. 25-M4 アカ	CODE NO. 000-536-715	5	上下装置工材 FOR HULL UNIT
26	アース板 COPPER STRAP	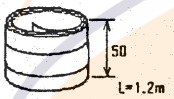	WEA-1004-0	CODE NO. 500-310-040	1	送振装置工材 FOR TRANSMITTER UNIT
27	圧着端子 CRIMP-ON LUG	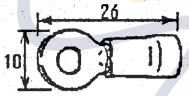	FV5. 5-4	CODE NO. 000-538-123	5	送振装置工材 FOR TRANSMITTER UNIT
28	コネクタ CONNECTOR	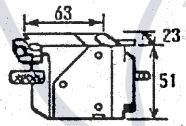	54-038-000-601/SC	CODE NO. 000-132-081	3	送振装置工材 FOR TRANSMITTER UNIT
29	圧着端子 CRIMP-ON LUG	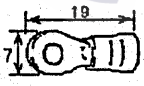	FV1. 25-M4 アカ	CODE NO. 000-536-715	5	送振装置工材 FOR TRANSMITTER UNIT
30	コンタクト CONTACT PIN	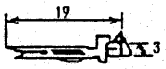	60-8017-0313-00-339	CODE NO. 000-519-542	120	送振装置工材 FOR TRANSMITTER UNIT

C1257-M03- C

FURUNO ELECTRIC CO., LTD

（略図の寸法は、参考値です。 DIMENSIONS IN DRAWING FOR REFERENCE ONLY.）

FURUNO

CODE NO.	006-989-010	10BW-X-9401 -5
TYPE	CP10-02710	4/4

工事材料表

INSTALLATION MATERIALS

CSH-21・K・F/22・F
23・K・F/251W/261W
271W/281W/281S/288W

カラースキャニング ソナー

COLOR SCANNING SONAR

番号 NO.	名称 NAME	略図 OUTLINE	型名／規格 DESCRIPTIONS		数量 Q'TY	用途／備考 REMARKS
31	貼りマーク STICKER	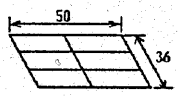	10-026-5002-0		1	送振装置工材 FOR TRANSMITTER UNIT
			CODE NO.	100-004-870		
32	ホールプラグ HOLE PLUG	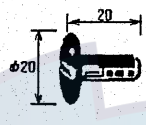	NO. 4567		4	送振装置工材 FOR TRANSMITTER UNIT
			CODE NO.	000-800-729		
33	圧着端子 CRIMP-ON LUG	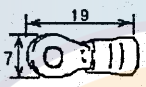	FV1.25-M4 アカ		6	電源装置工材 FOR POWER UNIT
			CODE NO.	000-536-715		
34	ホールプラグ HOLE PLUG	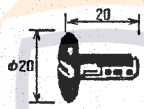	NO. 4567		4	電源装置工材 FOR POWER UNIT
			CODE NO.	000-800-729		
35	コンタクト CONTACT PIN	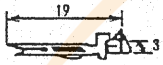	60-8017-0313-00-339		38	電源装置工材 FOR POWER UNIT
			CODE NO.	000-519-542		
36	コネクタ CONNECTOR	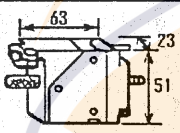	54-038-000-601/SC		1	電源装置工材 FOR POWER UNIT
			CODE NO.	000-132-081		
37	アース板 COPPER STRAP	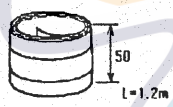	WEA-1004-0		1	電源装置工材 FOR POWER UNIT
			CODE NO.	500-310-040		
38	貼りマーク.1. STICKER.1.	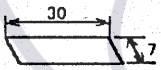	10-026-7018-0		1	電源装置工材 FOR POWER UNIT
			CODE NO.	100-008-630		
39	圧着端子 CRIMP-ON LUG	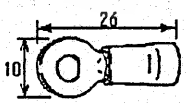	FV5.5-4		15	電源装置工材 FOR POWER UNIT
			CODE NO.	000-538-123		

C1257-M04- C

FURUNO ELECTRIC CO., LTD

（略図の寸法は、参考値です。 DIMENSIONS IN DRAWING FOR REFERENCE ONLY.）

FURUNO

CODE NO.		10BW-X-9405 -3
TYPE		1/1

工事材料表

INSTALLATION MATERIALS

CSH-21/K/F・22/F
23/F/FL/K・24/F/FL
53・55・80・81・82・83
84・88・288W

カラースキャニング ソナー

COLOR SCANNING SONAR

番号 NO.	名称 NAME	略図 OUTLINE	型名／規格 DESCRIPTIONS		数量 Q'TY	用途／備考 REMARKS
1	6ツイストケーブル 6P TWISTED PAIR CABLE	 L=5m	CO-SPEV-SB 0.3X6P		1	
			CODE NO.	000-100-992		

C1286-M05- D

FURUNO ELECTRIC CO., LTD

（略図の寸法は、参考値です。 DIMENSIONS IN DRAWING FOR REFERENCE ONLY.）

FURUNO

CODE NO.	006-959-800	10CC-X-9401 -0
TYPE	CP10-03410	1/4

工事材料表

INSTALLATION MATERIALS

CSH-22/22F/24/24F 24FL カラースキャニングソナー

COLOR SCANNING SONAR

番号 NO.	名称 NAME	略図 OUTLINE	型名／規格 DESCRIPTIONS	数量 Q'TY	用途／備考 REMARKS
1	コンタクト CONTACT PIN	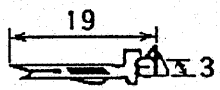	60-8017-0313-00-339 CODE NO. 000-519-542	38	外部インターフェイスユニット用 FOR DATA INTERFACE UNIT
2	コネクタ CONNECTOR	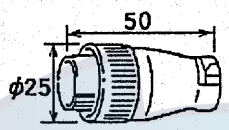	SRCN6A16-10P CODE NO. 000-508-663	4	外部インターフェイスユニット用 FOR DATA INTERFACE UNIT
3	コネクタ CONNECTOR	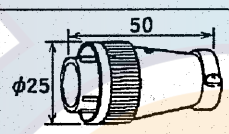	SRCN6A16-7P CODE NO. 000-508-662	1	外部インターフェイスユニット用 FOR DATA INTERFACE UNIT
4	コネクタ CONNECTOR	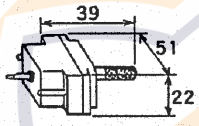	00-8016-038-313761HV CODE NO. 000-127-234	1	外部インターフェイスユニット用 FOR DATA INTERFACE UNIT
5	アース線組品 GROUNDING WIRE		CS-120-C CODE NO. 006-937-990	1	外部インターフェイスユニット用 FOR DATA INTERFACE UNIT
6	貼りマーク. J201. STICKER. J201.	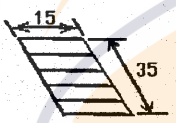	10-018-5022 CODE NO. 181-850-220	1	外部インターフェイスユニット用 FOR DATA INTERFACE UNIT
7	コネクタ CONNECTOR	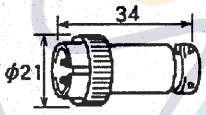	RM15TP-2PA CODE NO. 000-503-314	1	外部インターフェイスユニット用 FOR DATA INTERFACE UNIT
8	コネクタ CONNECTOR	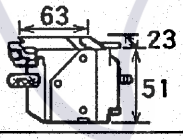	54-038-000-601/SC CODE NO. 000-132-081	1	外部インターフェイスユニット用 FOR DATA INTERFACE UNIT
9	アース板 COPPER STRAP	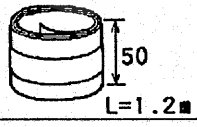	WEA-1004-0 CODE NO. 500-310-040	1	指示装置用 FOR DISPLAY UNIT
10	イラックスチューブ(A) INSULATION TUBE	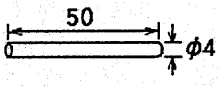	4.0X0.3 キイロ *5CM* CODE NO. 000-100-923	1	指示装置用 FOR DISPLAY UNIT

C1292-M01- A

FURUNO ELECTRIC CO., LTD

（略図の寸法は、参考値です。 DIMENSIONS IN DRAWING FOR REFERENCE ONLY.）

FURUNO

CODE NO.	006-959-800	10CC-X-9401 -0
TYPE	CP10-03410	2/4

工事材料表

INSTALLATION MATERIALS

CSH-22/22F/24/24F 24FL

ｶﾗｰｽｷｬﾆﾝｸﾞ ｿﾅｰ

COLOR SCANNING SONAR

番号 NO.	名称 NAME	略図 OUTLINE	型名／規格 DESCRIPTIONS	数量 Q'TY	用途／備考 REMARKS
11	M8化粧ﾋﾞｽ PANEL SCREW	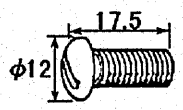	10-054-1144-0 CODE NO. 100-195-970	4	指示装置用 FOR DISPLAY UNIT
12	ｺﾈｸﾀ CONNECTOR	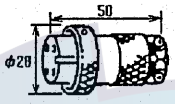	NCS-253-P CODE NO. 000-506-503	1	指示装置用 FOR DISPLAY UNIT
13	ｸｰﾗｰﾊﾟﾃ COOLER PUTTY	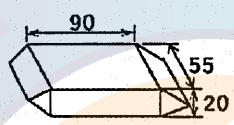	200Gｲﾘ ｼﾛｲﾛ CODE NO. 000-807-621	2	指示装置用 FOR DISPLAY UNIT
14	ｺﾈｸﾀ CONNECTOR	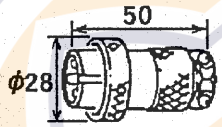	NCS-252-P CODE NO. 000-506-501	1	指示装置用 FOR DISPLAY UNIT
15	ｺﾈｸﾀ CONNECTOR	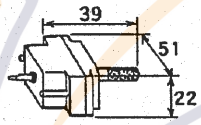	00-8016-038-313761HV CODE NO. 000-127-234	1	指示装置用 FOR DISPLAY UNIT
16	ｺﾝﾀｸﾄ CONTACT PIN		60-8017-0313-00-339 CODE NO. 000-519-542	114	受信装置用 FOR RECEIVER UNIT
17	ｼｰﾙﾄﾞｽﾘｰﾌﾞ SHIELD SLEEVE	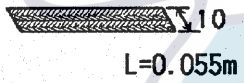	ZS-06H *0.055M* CODE NO. 000-807-634	20	受信装置用 FOR RECEIVER UNIT
18	P貼りﾏｰｸ.11. P STICKER.11.	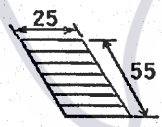	10-026-0619-0 CODE NO. 100-014-880	1	受信装置用 FOR RECEIVER UNIT
19	ｱｲﾎﾞﾙﾄ EYE-BOLT	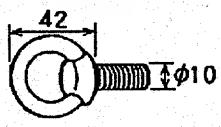	M10 SS41 MFZI2 CODE NO. 000-862-506	2	受信装置用 FOR RECEIVER UNIT
20	ｺﾈｸﾀ CONNECTOR	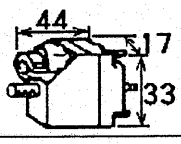	00-8016-020-313-703V CODE NO. 000-111-143	1	受信装置用 FOR RECEIVER UNIT

C1292-M02- A

FURUNO ELECTRIC CO., LTD

（略図の寸法は、参考値です。 DIMENSIONS IN DRAWING FOR REFERENCE ONLY.）

FURUNO

CODE NO.	006-959-800	10CC-X-9401 -0
TYPE	CP10-03410	3/4

工事材料表

INSTALLATION MATERIALS

CSH-22/22F/24/24F 24FL

カラースキャニングソナー

COLOR SCANNING SONAR

番号 NO.	名称 NAME	略図 OUTLINE	型名／規格 DESCRIPTIONS	数量 Q'TY	用途／備考 REMARKS
21	ミガキ平座金 FLAT WASHER	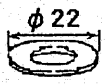	M10 SS41 MFZN2-B CODE NO. 000-864-191	2	受信装置用 FOR RECEIVER UNIT
22	コネクタ CONNECTOR	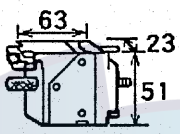	54-038-000-601/SC CODE NO. 000-132-081	3	受信装置用 FOR RECEIVER UNIT
23	アース板 COPPER STRAP	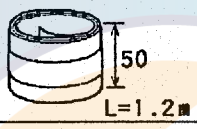	WEA-1004-0 CODE NO. 500-310-040	1	受信装置用 FOR RECEIVER UNIT
24	圧着端子 CRIMP-ON LUG	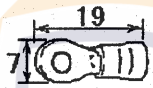	FV1.25-M4 アカ CODE NO. 000-536-715	5	上下装置用 FOR HULL UNIT
25	圧着端子 CRIMP-ON LUG	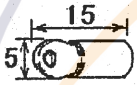	FV1.25-3.7 アカ CODE NO. 000-108-699	15	上下装置用 FOR HULL UNIT
26	圧着端子 CRIMP-ON LUG	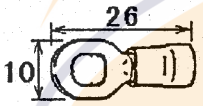	FV5.5-4 CODE NO. 000-538-123	5	上下装置用 FOR HULL UNIT
27	圧着端子 CRIMP-ON LUG	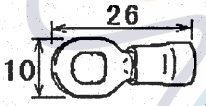	FV5.5-4 CODE NO. 000-538-123	5	送振装置用 FOR TRANSMITTER UNIT
28	アース板 COPPER STRAP	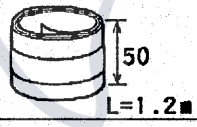	WEA-1004-0 CODE NO. 500-310-040	1	送振装置用 FOR TRANSMITTER UNIT
29	コンタクト CONTACT PIN	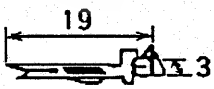	60-8017-0313-00-339 CODE NO. 000-519-542	120	送振装置用 FOR TRANSMITTER UNIT
30	ホールプラグ HOLE PLUG	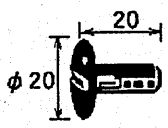	NO.4567 CODE NO. 000-800-729	4	送振装置用 FOR TRANSMITTER UNIT

C1292-M03- A

FURUNO ELECTRIC CO., LTD

（略図の寸法は、参考値です。 DIMENSIONS IN DRAWING FOR REFERENCE ONLY.）

FURUNO

CODE NO.	006-959-800	10CC-X-9401 -0
TYPE	CP10-03410	4/4

工事材料表

INSTALLATION MATERIALS

CSH-22/22F/24/24F 24FL カラースキャニングソナー

COLOR SCANNING SONAR

番号 NO.	名称 NAME	略図 OUTLINE	型名／規格 DESCRIPTIONS		数量 Q'TY	用途／備考 REMARKS
31	圧着端子 CRIMP-ON LUG	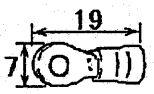	FV1.25-M4 アカ CODE NO.	000-536-715	5	送振装置用 FOR TRANSMITTER UNIT
32	コネクタ CONNECTOR	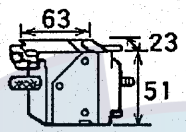	54-038-000-601/SC CODE NO.	000-132-081	3	送振装置用 FOR TRANSMITTER UNIT
33	貼りマーク STICKER	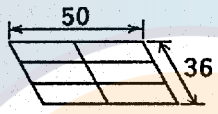	10-026-5002-0 CODE NO.	100-004-870	1	送振装置用 FOR TRANSMITTER UNIT
34	コネクタ CONNECTOR	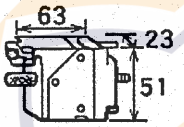	54-038-000-601/SC CODE NO.	000-132-081	1	電源装置用 FOR POWER SUPPLY UNIT
35	圧着端子 CRIMP-ON LUG	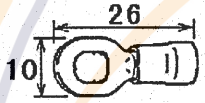	FV5.5-4 CODE NO.	000-538-123	15	電源装置用 FOR POWER SUPPLY UNIT
36	ホールプラグ HOLE PLUG	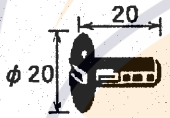	NO.4567 CODE NO.	000-800-729	4	電源装置用 FOR POWER SUPPLY UNIT
37	アース板 COPPER STRAP	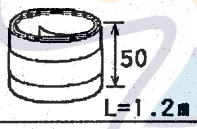	WEA-1004-0 CODE NO.	500-310-040	1	電源装置用 FOR POWER SUPPLY UNIT
38	圧着端子 CRIMP-ON LUG	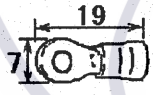	FV1.25-M4 アカ CODE NO.	000-536-715	6	電源装置用 FOR POWER SUPPLY UNIT
39	貼りマーク.1. STICKER.1.	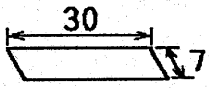	10-026-7018-0 CODE NO.	100-008-630	1	電源装置用 FOR POWER SUPPLY UNIT
40	コンタクト CONTACT PIN	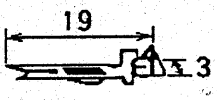	60-8017-0313-00-339 CODE NO.	000-519-542	38	電源装置用 FOR POWER SUPPLY UNIT

C1292-M04- A

FURUNO ELECTRIC CO., LTD

（略図の寸法は、参考値です。 DIMENSIONS IN DRAWING FOR REFERENCE ONLY.）

FURUNO

CODE NO.	006-027-830	10CI-X-9501 -2
TYPE	FP10-01801	1/1

付属品表

ACCESSORIES

番号 NO.	名称 NAME	略図 OUTLINE	型名／規格 DESCRIPTIONS	数量 Q'TY	用途／備考 REMARKS
1	ﾌｰﾄﾞ HOOD	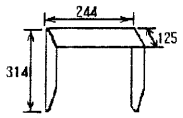	10-062-1601-0 CODE NO. 100-250-550	1	
2	ﾌｰﾄﾞ取り付け金具 HOOD MOUNTING PLATE	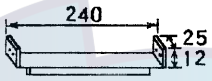	16-062-1602-0 CODE NO. 100-250-560	1	
3	ﾌｨﾙﾀｰﾋﾞｽ FILTER MOUNTING SCREW	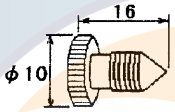	66-007-1222-0 CODE NO. 860-712-220	1	
4	+ﾊﾞｲﾝﾄﾞ小ﾈｼﾞ BINDING HEAD SCREW	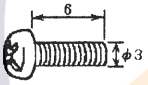	M3X6 C2700Wﾎﾞﾘｼｰﾙ ｸﾛ ﾅｲﾛﾝﾜｯｼｬﾂｷ CODE NO. 000-800-582	4	

DWG NO. C1307-F01- B

FURUNO ELECTRIC CO., LTD.

(略図の寸法は、参考値です。 DIMENSIONS IN DRAWING FOR REFERENCE ONLY.)

FURUNO

CODE NO.	006-989-020	10BW-X-9505 -1
TYPE	FP10-01201	1/1

付属品表

ACCESSORIES

番号 NO.	名称 NAME	略図 OUTLINE	型名／規格 DESCRIPTIONS		数量 Q'TY	用途／備考 REMARKS
1	取手 HANDLE	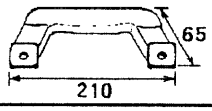	14-002-1125-2		2	
			CODE NO.	840-211-252		
2	ローゼット座金 ROSETTE WASHER	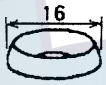	M6 C2700W ポリシール クロ		4	
			CODE NO.	000-864-910		
3	+丸皿小ネジ OVAL COUNTERSUNK HEAD SCREW	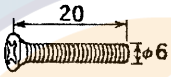	M6X20 C2700W ホリシール クロ		4	
			CODE NO.	000-861-475		
4	波座金 WAVE WASHER		WW-6 SUS		4	
			CODE NO.	000-864-350		

DWG NO.
C1286-F01- F

FURUNO ELECTRIC CO., LTD.

（略図の寸法は、参考値です。 DIMENSIONS IN DRAWING FOR REFERENCE ONLY.）

FURUNO

CODE NO.	006-989-040	10CF-X-9501 -1
TYPE	FP10-01203	1/1

付属品表

ACCESSORIES

CSH-55/53/23・F・K 73/83 リモート掛け具

REMOTE HOOK

番号 NO.	名称 NAME	略図 OUTLINE	型名／規格 DESCRIPTIONS		数量 Q'TY	用途／備考 REMARKS
1	掛具 HOOK	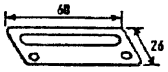	10-026-8226-1		1	
			CODE NO.	100-008-801		
2	ナナベ Pタイトネジ SCREW		3X14 SWCH18A MFZN-2-C		2	
			CODE NO.	000-800-172		

C1297-F01- A

FURUNO ELECTRIC CO., LTD

（略図の寸法は、参考値です。 DIMENSIONS IN DRAWING FOR REFERENCE ONLY.）

FURUNO

CODE NO.		10BW-X-9501 -5
TYPE		1/1

付属品表

ACCESSORIES

CSH-21/F/K/216/216F, CSH-23/F/K/FL
CSH-53, 58
CSH-71, 73
CSH-81, 83

番号 NO.	名称 NAME	略図 OUTLINE	型名／規格 DESCRIPTIONS		数量 Q'TY	用途／備考 REMARKS
1	ﾅｲﾛﾝｶﾊﾞｰ PLASTIC COVER	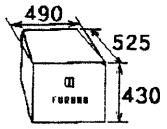	10-051-1031		1	
			CODE NO.	000-803-289		

DWG NO.
C1286-F05- B

FURUNO ELECTRIC CO., LTD.

(略図の寸法は、参考値です。 DIMENSIONS IN DRAWING FOR REFERENCE ONLY.)

FURUNO

CODE NO.	006-908-550	10CM-X-9501 -1
TYPE	FP10-01901	1/1

付属品表

ACCESSORIES

CSH-24/24F/24FL/84 カラースキャニングソナー

COLOR SCANNING SONAR

番号 NO.	名称 NAME	略図 OUTLINE	型名／規格 DESCRIPTIONS		数量 Q'TY	用途／備考 REMARKS
1	ナベインドボルネジ BINDING HEAD SCREW	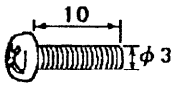	M3X10 C2700Wポリシール クロ ナイロンワッシャツキ		4	
			CODE NO.	000-800-923		
2	フードボ取付金具 HOOD FIXTURE	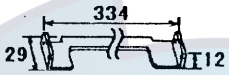	10-064-1602-0		1	
			CODE NO.	100-253-720		
3	フィルタービス FILTER MOUNTING SCREW	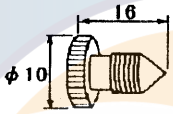	66-007-1222-0		1	
			CODE NO.	860-712-220		

C1310-F01- B

FURUNO ELECTRIC CO., LTD

（略図の寸法は、参考値です。 DIMENSIONS IN DRAWING FOR REFERENCE ONLY.）

FURUNO

CODE NO.		10CB-X-9501 -2
TYPE		1/1

付属品表

ACCESSORIES

CSH-288W/88/22/22F 72/82/24/24F/24FL 84

カラースキャニングソナー

COLOR SCANNING SONAR

番号 NO.	名称 NAME	略図 OUTLINE	型名／規格 DESCRIPTIONS		数量 Q'TY	用途／備考 REMARKS
1	ナイロンカバー PLASTIC COVER	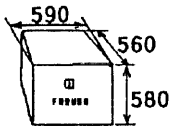	10-054-1021		1	
			CODE NO.	000-804-936		

C1310-F03- A

FURUNO ELECTRIC CO., LTD

（略図の寸法は、参考値です。 DIMENSIONS IN DRAWING FOR REFERENCE ONLY.）

FURUNO

CODE NO.		10CP-X-9501 -0
TYPE		1/1

付属品表

ACCESSORIES

CSH-23/23F/24/24F/53/58/73/83/84/

番号 NO.	名称 NAME	略図 OUTLINE	型名／規格 DESCRIPTIONS		数量 Q'TY	用途／備考 REMARKS
1	RAMカード組品 RAM CARD		00RAM256C-001		1	
			CODE NO.	004-321-070		

DWG NO.
C1307-F02- A

FURUNO ELECTRIC CO., LTD.

（略図の寸法は、参考値です。 DIMENSIONS IN DRAWING FOR REFERENCE ONLY.）

FURUNO

CODE NO.		10CM-X-9502 -0
TYPE		1/1

付属品表

ACCESSORIES

CSH-24/24F/24FL/84 カラースキャニングソナー

COLOR SCANNING SONAR

番号 NO.	名称 NAME	略図 OUTLINE	型名／規格 DESCRIPTIONS	数量 Q'TY	用途／備考 REMARKS
1	フード HOOD	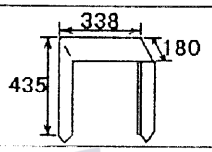	10-064-1601-0 CODE NO. 100-253-710	1	

C1310-F04- A

FURUNO ELECTRIC CO., LTD

（略図の寸法は、参考値です。 DIMENSIONS IN DRAWING FOR REFERENCE ONLY.）

FURUNO

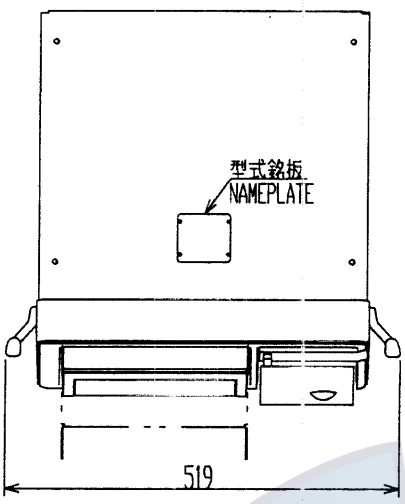

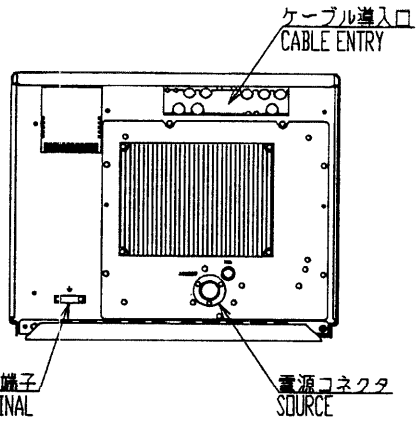

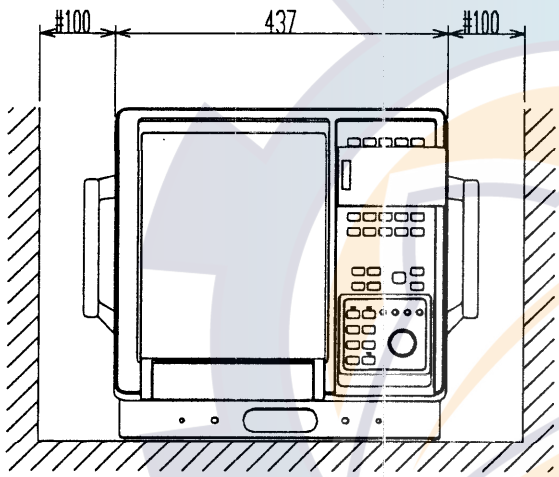

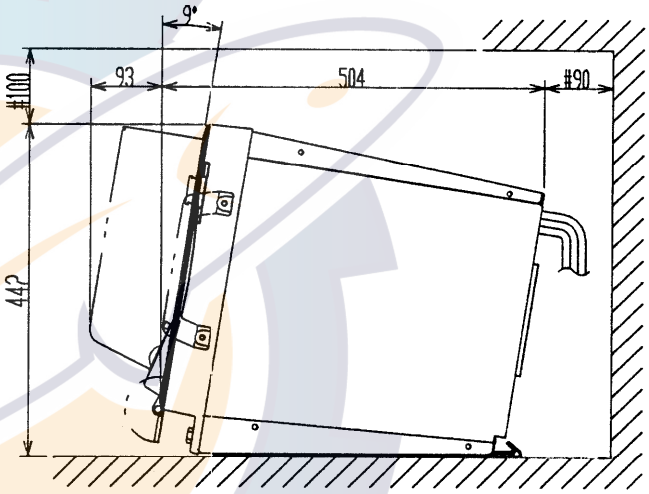

表1 TABLE 1

寸法区分(mm) DIMENSION	公差(mm) TOLERANCE
0 < L ≦ 50	±1.5
50 < L ≦ 100	±2.5
100 < L ≦ 500	±3
500 < L ≦ 1000	±4

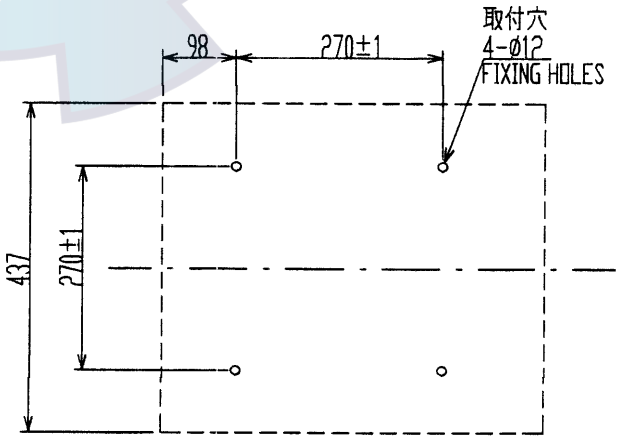

注記
1）#印寸法は最小サービス空間寸法とする
2）指定なき寸法公差は表1による。

NOTE
1. #: RECOMMENDED SERVICE CLEARANCE.
2. TABLE 1 INDICATES TOLERANCE OF DIMENSIONS.

DRAWN Jun.12 '01 T.YAMASAKI		TITLE	CSH-230/236/530/536/731/736/580/586/830
CHECKED June 12'01 T.K		名称	指示装置
APPROVED June 12'01 S.Y	CSH-53/73/83/58 CSH-23/F/K		外寸図
SCALE 1/10 MASS 35 ±10% kg	CSH-230/236 INCLUDE -F/K CSH-230/236は-F/Kを含む。	NAME	DISPLAY UNIT
DWG.No. C1307-G01- E	10-062-1000-G0		OUTLINE DRAWING

FURUNO ELECTRIC CO., LTD.

FURUNO

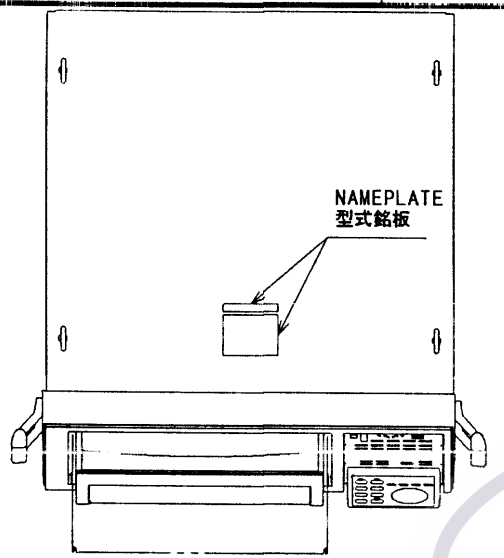

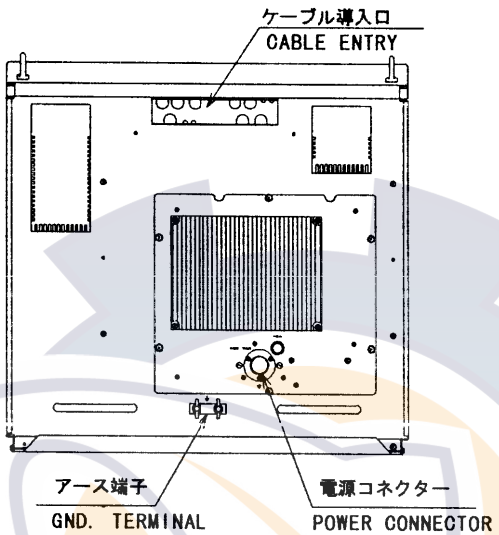

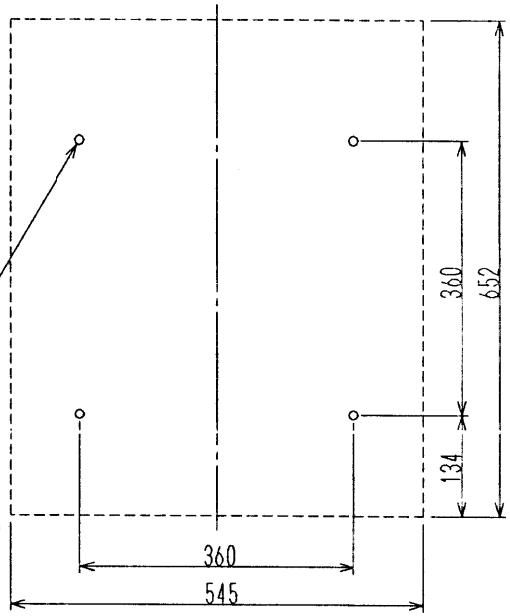

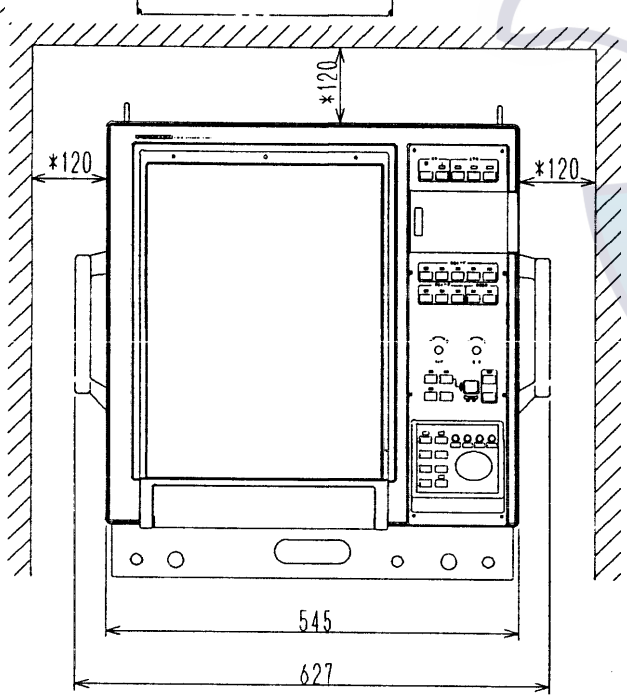

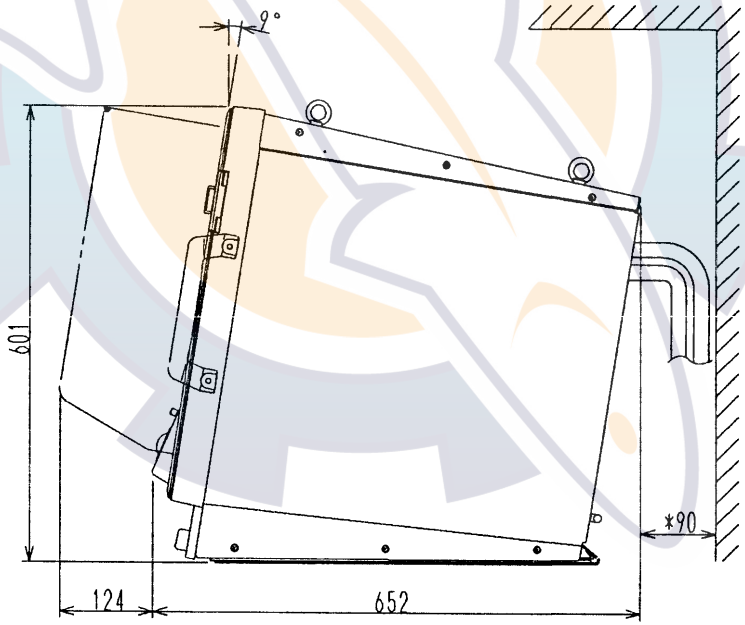

注記
1) ＊印寸法は最小サービス空間寸法とする．
NOTE
1. *: RECOMMENDED SERVICE CLEARANCE DIMENSION.

DRAWN Jan.16 '98 T.Yamasaki			TITLE CSH-2400
CHECKED Jan 19 '98 K.Kusunoki	CSH-84 CSH-24FL		名称 指示装置
APPROVED Jan 19 '98 H.Yamazaki	CSH-24F CSH-24		外寸図
SCALE 1/10	MASS 66 kg		NAME DISPLAY UNIT
DWG. No. C1310-G01- A		10-064-1000-G2	OUTLINE DIAGRAM

FURUNO ELECTRIC CO., LTD.

D-1a

表１　TABLE 1

寸法区分(mm) DIMENSION	公差(mm) TOLERANCE
0 ＜ L ≦ 50	±1.5
50 ＜ L ≦ 100	±2.5
100 ＜ L ≦ 500	±3

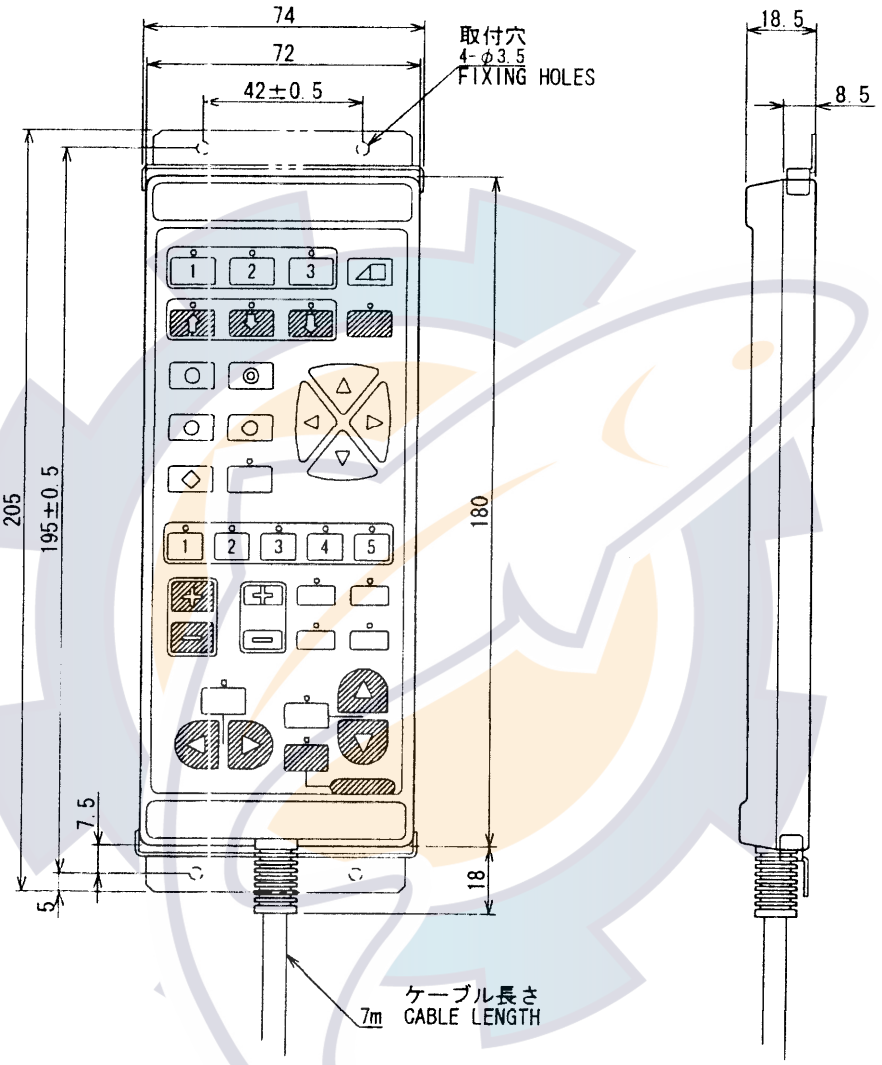

注記
１）指定なき寸法公差は表１による。

NOTE
1. TABLE 1 INDICATES TOLERANCE OF DIMENSIONS.

DRAWN Dec. 26 '00 T. YAMASAKI		TITLE CSH-116/135
CHECKED Dec 27 '00 Y. K		名称 リモート箱
APPROVED Dec 27 '00 Y. K	CSH-53/33/73/58 CSH-21/22/23/23F	外寸図
SCALE 1/2 MASS 1.5 ±10% kg		NAME REMOTE CONTROL BOX
DWG. No. C1286-G02- D		OUTLINE DRAWING

FURUNO ELECTRIC CO., LTD.

FURUNO

注記
1．※印は外足取付時の寸法（取外し可）。
2．他の機器や壁との間を前方300mm
　その他は100mm以上あけること.

NOTES
1．ASTERISK'※'SHOWS OUTSIDE LEG
　(REMOVABLE) MOUNTING DIMENSIONS.
2．MINIMUM MAINTENANCE AND
　VENTILATION SPACE IS 300 mm
　ON FRONT SIDE AND 100 mm
　ON THE OTHER SIDES.

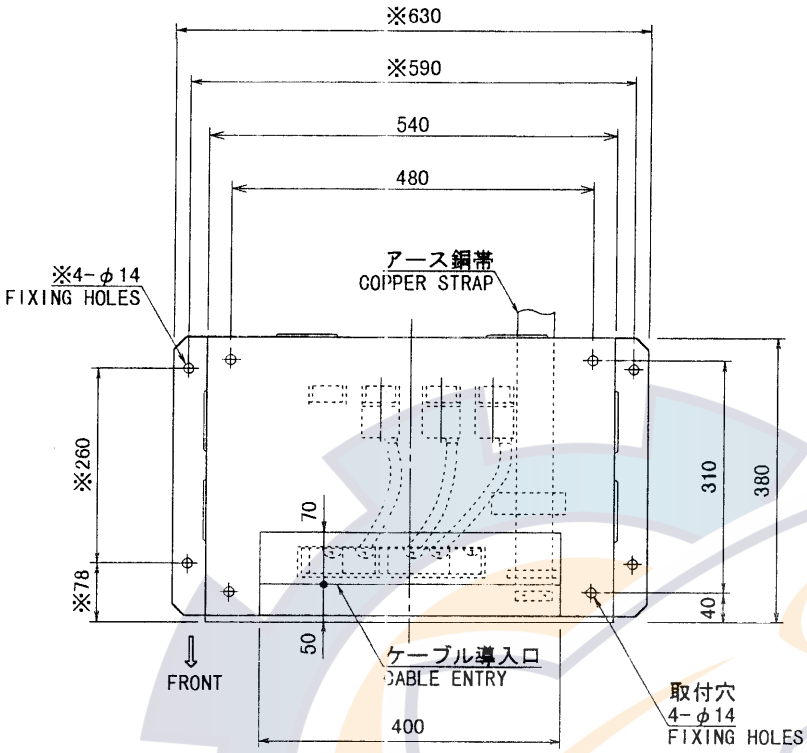

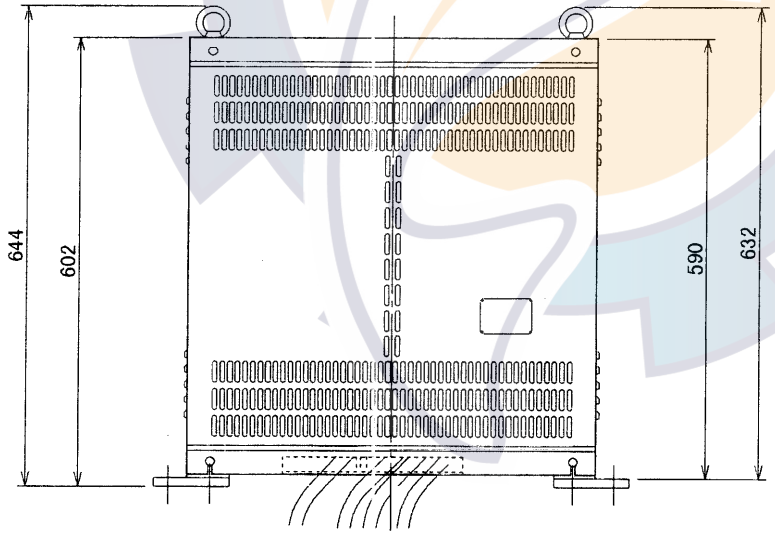

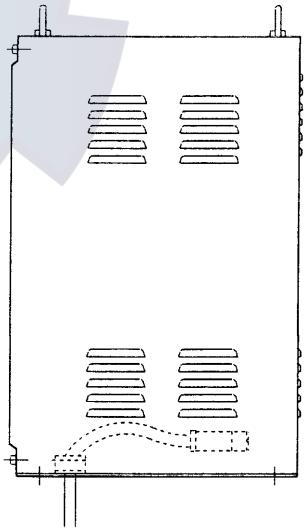

質量 MASS (kg)
CHS-310: 96
CHS-810: 82

DRAWN June 26 '00 T. YAMASAKI		TITLE	CSH-310/K, CSH-810
CHECKED June 26 '00 Y. Kiura		名称	送振装置
APPROVED June 26 '00 Y. Kiura			外寸図
SCALE 1/10	MASS kg	NAME	TRANSMITTER UNIT
DWG. No. C1257-018- F			OUTLINE DRAWING

FURUNO ELECTRIC CO., LTD.

注記
1．※印は外足取付時の寸法（取外し可化）。
2．他の機器や壁との間を前方300mm
その他は100mm以上あけること。
3．外足取付の場合は、両側面に取付ネジ
を締め付けるスペースが必要。

NOTE
1．ASTERISK '※' SHOWS OUTSIDE
LEG (REMOVABLE) MOUNTING DIMENSIONS.
2．MINIMUM MAINTENANCE AND
VENTILATION SPACE IS 300mm
ON FRONT SIDE AND 100mm
ON THE OTHER SIDES.
3．FOR OUTSIDE LEG TYPE,
ADDITIONAL SPACE IS REQUIRED
ON RIGHT AND LEFT SIDES
FOR INSTALLTION OF UNIT.

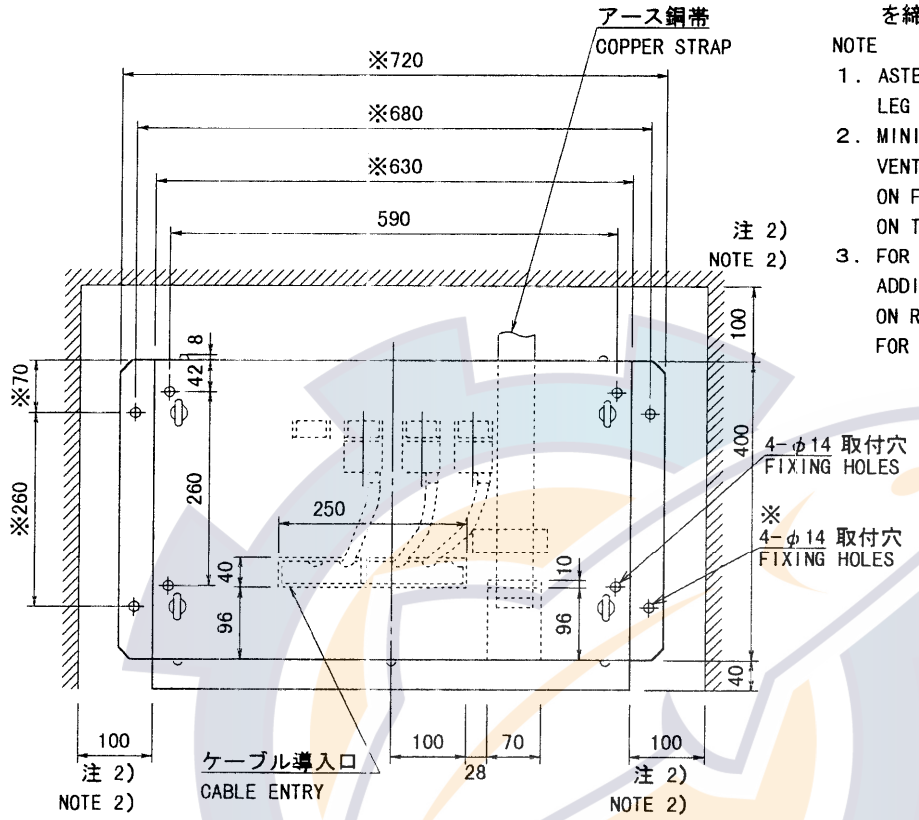

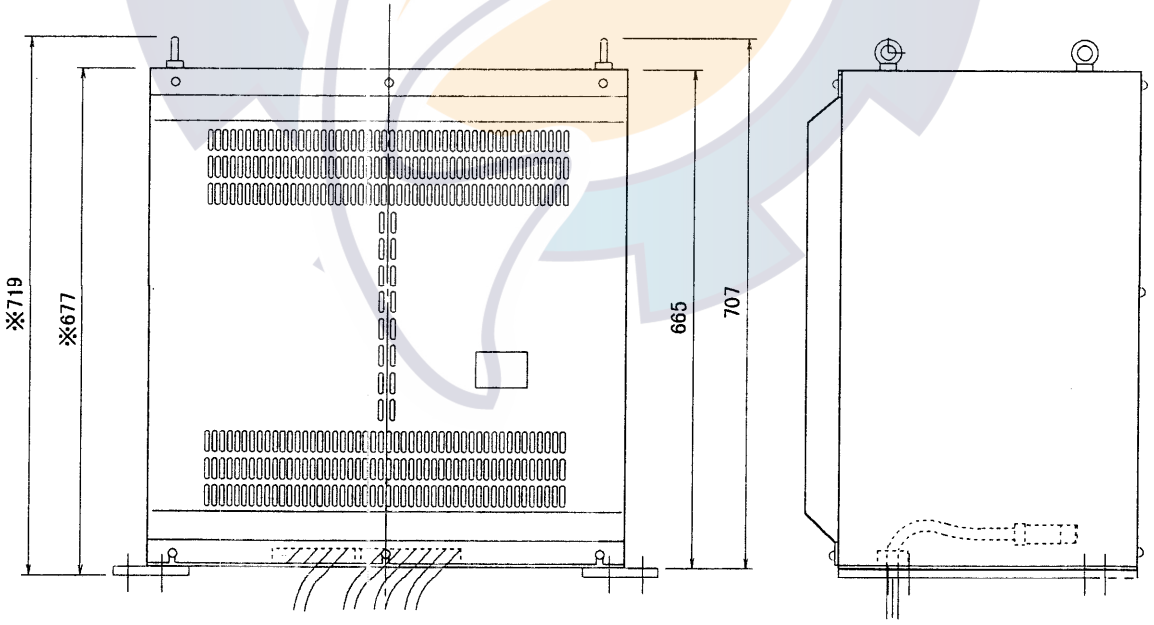

質量 MASS:
100 kg (内足: INSIDE FIXTURE)
110 kg (外足: OUTSIDE FIXTURE)

DRAWN June 26'00 T.YAMASAKI			TITLE CSH-310S/F II
CHECKED June 26 '00 Y. Kim			名称 送振装置
APPROVED June 26 '00 Y. Kim	CSH-20F/20S		外寸図
SCALE 1/1	MASS kg		NAME TRANSMITTER UNIT
DWG. No. C1272-G02- D			OUTLINE DRAWING

FURUNO ELECTRIC CO., LTD.

FURUNO

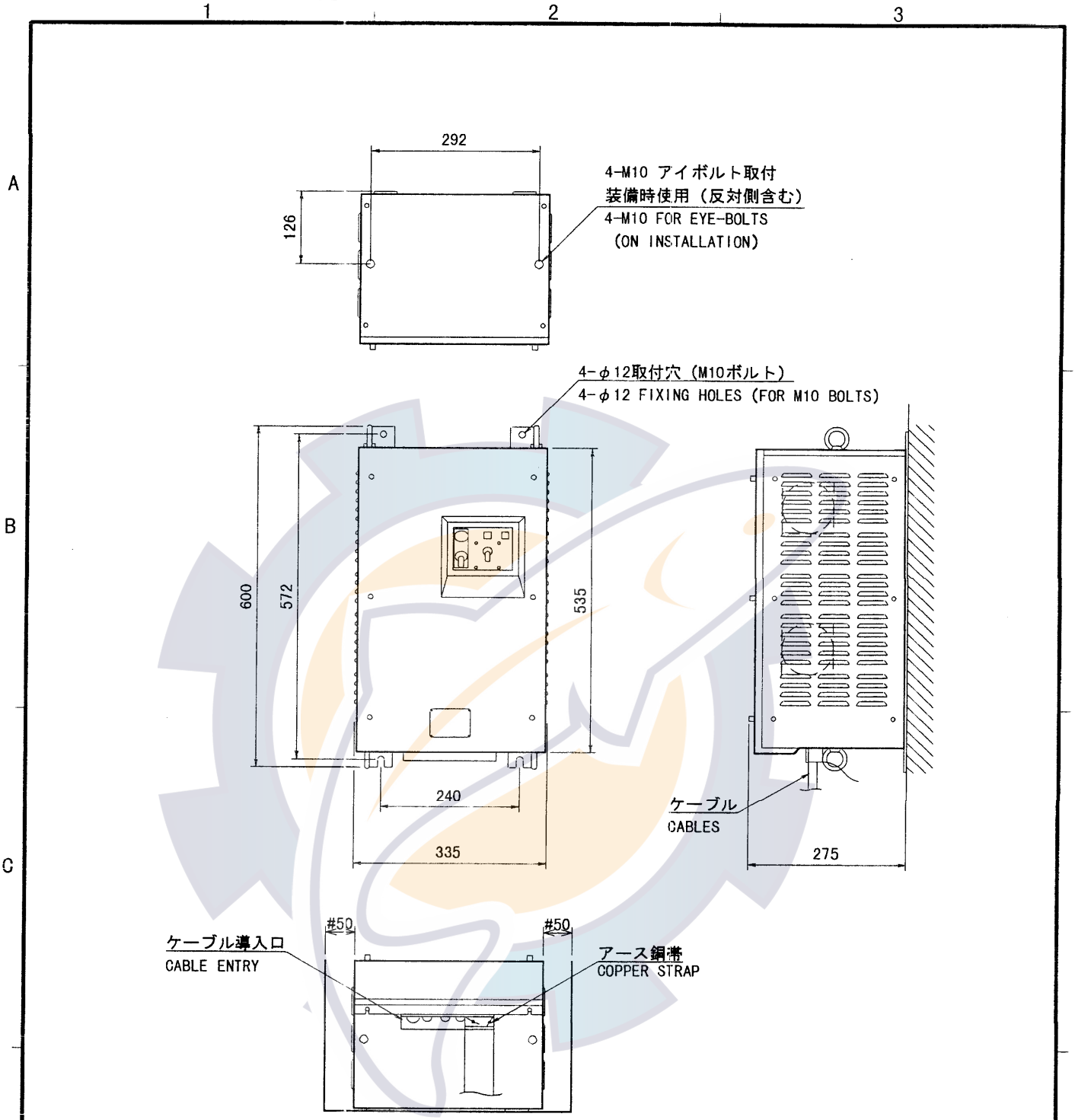

#：推奨するサービス空間寸法。
#: RECOMMENDED SERVICE CLEARANCE.

DRAWN June 26 '00 T. YAMASAKI		TITLE	CSH-380A/B, CSH-380S
CHECKED June 26 '00 T. Kim		名称	電源装置
APPROVED June 26 '00 T. Kim			外寸図
SCALE 1/10 MASS 56 kg		NAME	POWER UNIT
DWG. No. C1257-065- D			OUTLINE DRAWING

FURUNO ELECTRIC CO., LTD.

FURUNO

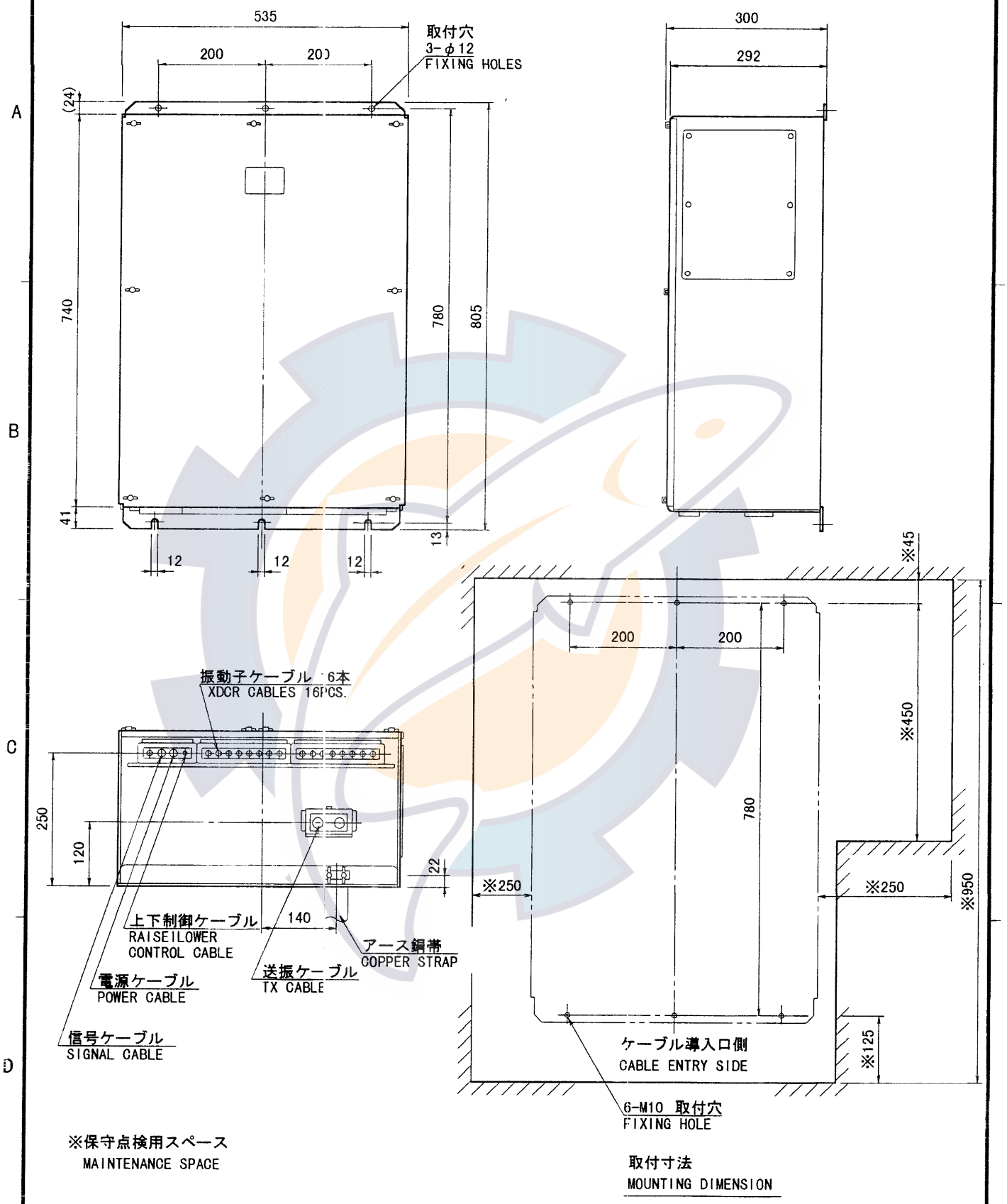

※保守点検用スペース
MAINTENANCE SPACE

取付寸法
MOUNTING DIMENSION

DRAWN June 26 '00 T. Yamasaki			TITLE CSH-220A/K/F II, CSH-220S
CHECKED June 26 '00 Y. Kimura			名称 受信装置
APPROVED June 26 '00 Y. Kimura	OTHERS CSH-21/22		外寸図
SCALE 1/10	MASS 47 kg		NAME RECEIVER UNIT
DWG. No. C1257-013- F			OUTLINE DRAWING

FURUNO ELECTRIC CO., LTD.

FURUNO

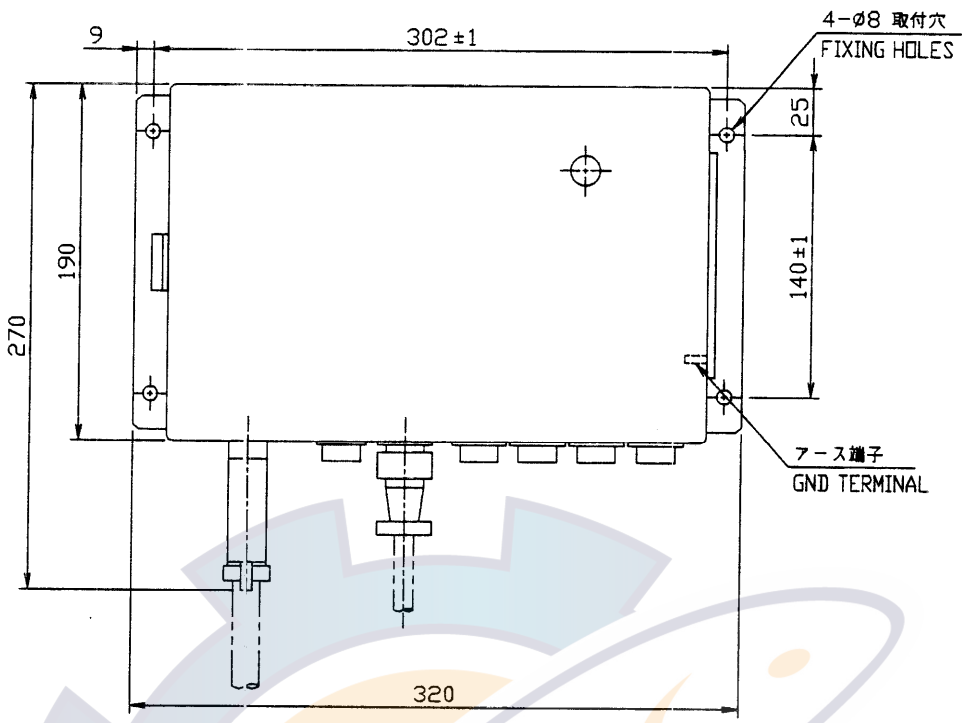

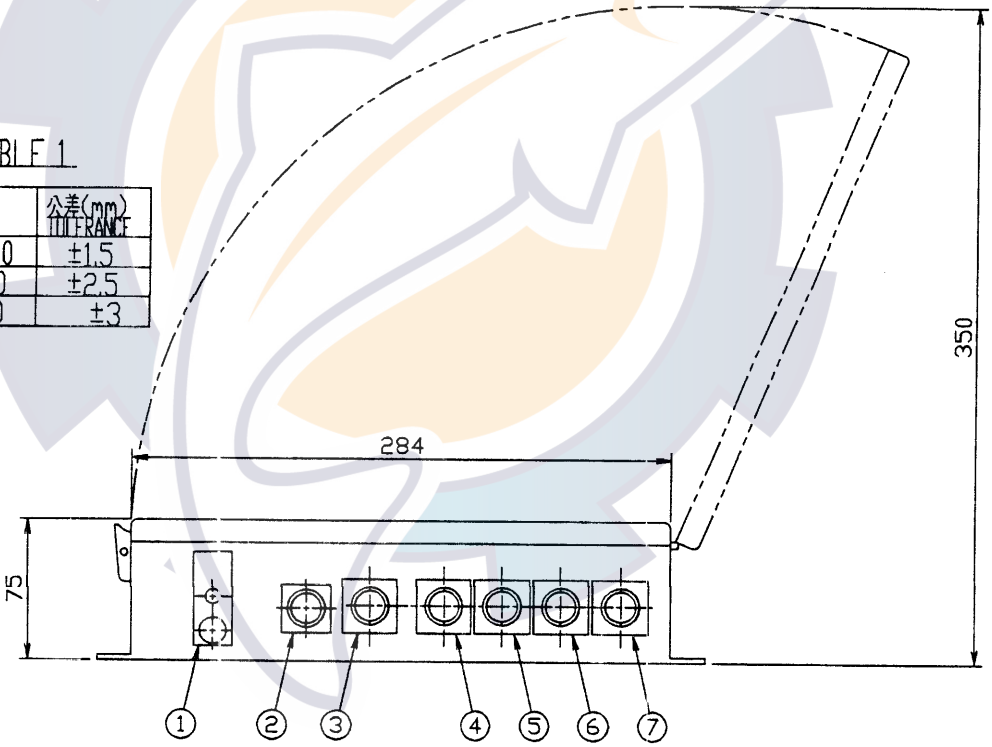

表1 TABLE 1

寸法区分(mm) DIMENSION	公差(mm) TOLERANCE
0 < L ≦ 50	±1.5
50 < L ≦ 100	±2.5
100 < L ≦ 500	±3

注記

1）指定なき寸法公差は表1による。

NOTE

1. TABLE 1 INDICATES TOLERANCE OF DIMENSIONS.

品番 ITEM	品名 NAME	数量 QTY	図番 DWG.NO
7	魚探レセプタクル RECEPTACLE FOR ECHO SOUNDER	1	
6	潮流計レセプタクル RECEPTACLE FOR DOPPLER SONAR CURRENT INDICATOR	1	
5	航法装置レセプタクル RECEPTACLE FOR NAVIGATION SYSTEM	1	
4	ジャイロレセプタクル RECEPTACLE FOR GYRO COMPASS	1	
3	ネットゾンデレセプタクル RECEPTACLE FOR NET ZONDE	1	
2	ログレセプタクル RECEPTACLE FOR SPEED LOG	1	
1	カラー魚群ディスプレイ指示器レセプタクル RECEPTACLE FOR COLOR SCANNING SONAR DISPLAY	1	

DRAWN Apr. 16 '01	T. YAMASAKI	TITLE	CS-120A
CHECKED Apr. 16 '01	Y. KIMURA	名称	外部インターフェース 外寸図
APPROVED Apr. 16 '01	Y. KIMURA	NAME	INTERFACE UNIT OUTLINE DRAWING
SCALE 1/4	MASS 3 ±10% kg		
DWG.No.	C1233-005-F		

FURUNO ELECTRIC CO., LTD.

FURUNO

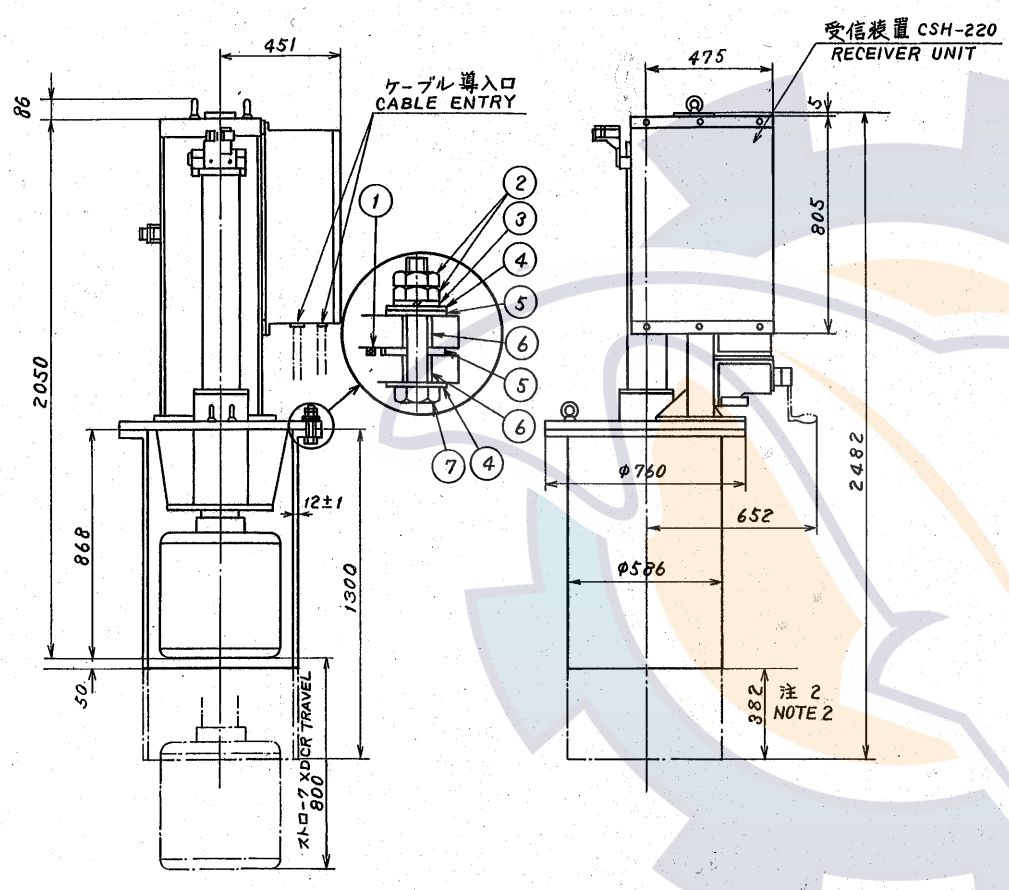

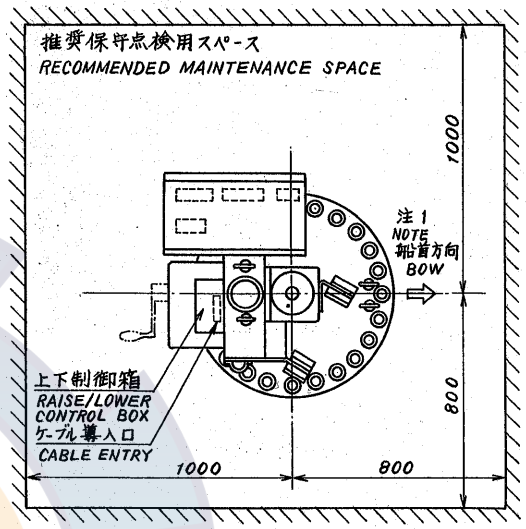

注 1. 架台フランジ上の矢印 ⇨ を船首方向に一致させることが出来ない時は指示装置内で船首線を調整のこと。
2. 装備位置に応じて382mm以内で切断のこと。

NOTE 1. HEADING ADJUSTMENT IS NEEDED IN DISPLAY UNIT IF THE ARROW ⇨ ON GALLOWS FLANGE DOES NOT FACE SHIP'S BOW.
2. CUT THE TANK WITHIN 382 MM IN LENGTH ACCORDING TO INSTALLATION SITE.

品番 ITEM	品名 NAME	材質 MATERIAL	数量 Q'TY	図番 DWG.NO.	摘要 REMARKS
7	六角ボルト HEX. BOLT	SUS304	13	M20×120	
6	絶縁パッキン(2) INSULATION PACKING(2)		37	MS-1000-68	
5	絶縁パッキン(1) INSULATION PACKING(1)		48	MS-1000-67	
4	平座金 FLAT WASHER	SUS304	37	MS-1000-69	
3	バネ座金 SPRING WASHER	SUS304	24	FOR M20	
2	六角ナット HEX. NUT	SUS304	48	M20	
1	O リング O-RING		1	JIS B2401 V585	

承認 APPROVED	Jan.11.'85	三角法 THIRD ANGLE PROJECTION		名称 TITLE	上下装置外寸図
検図 CHECKED	Jan.11.'85	尺度 SCALE		CSH-3080 HULL UNIT CSH-21080 (ストローク XDCR TRAVEL 800mm)	
製図 DRAWN	Jan.11.'85	重量 WEIGHT	970 kg	図番 DWG.NO.	C1257-014-E

FURUNO ELECTRIC CO., LTD.

D-8

FURUNO

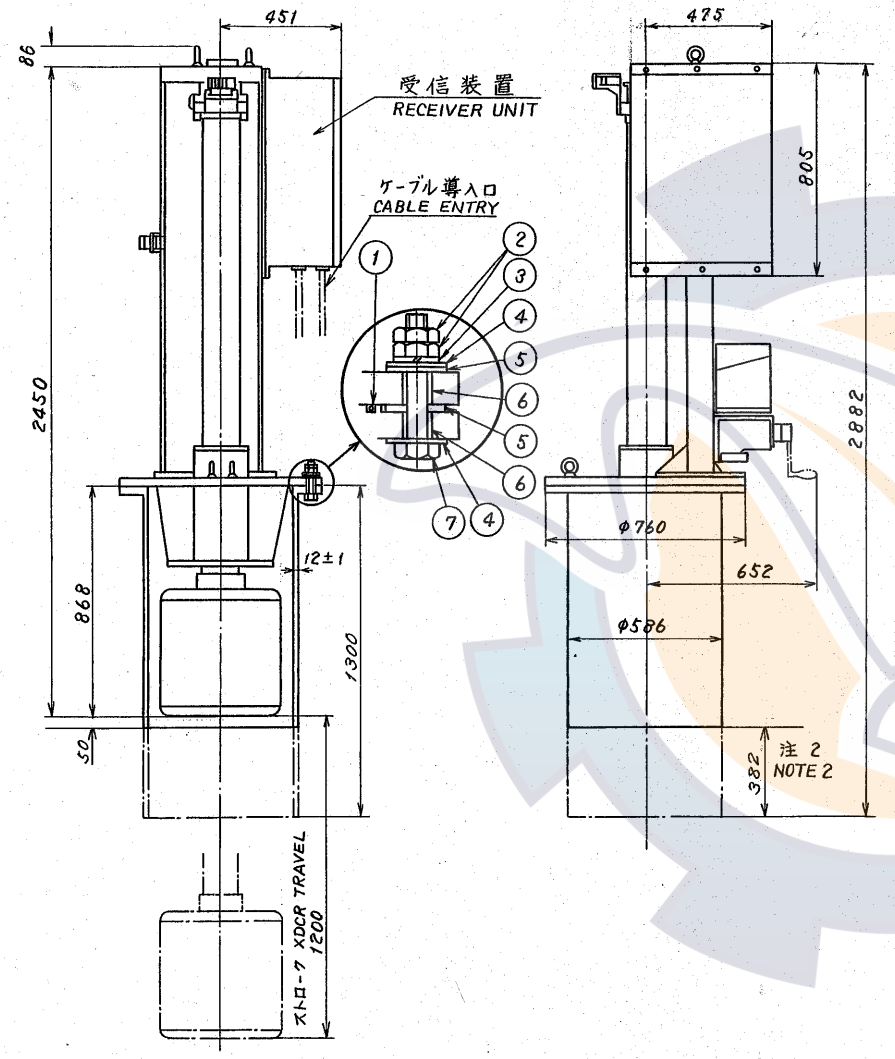

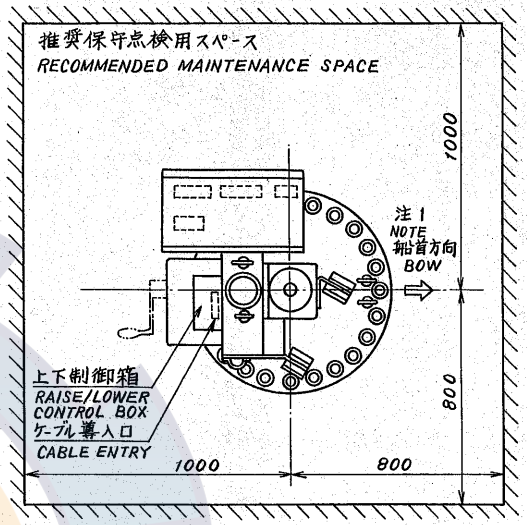

注 1. 架台フランジ上の矢印 ⇨ を船首方向に一致させることが出来ない時は指示装置内で船首線を調整のこと。

2. 装備位置に応じて382mm以内で切断のこと。

NOTE 1. HEADING ADJUSTMENT IS NEEDED IN DISPLAY UNIT IF THE ARROW ⇨ ON GALLOWS FLANGE DOES NOT FACE SHIP'S BOW.

2. CUT THE TANK WITHIN 382 MM IN LENGTH ACCORDING TO INSTALLATION SITE.

品番 ITEM	品名 NAME	材質 MATERIAL	数量 Q'TY	図番 DWG.NO.	摘要 REMARKS
7	六角ボルト HEX. BOLT	SUS304	13	M20×120	
6	絶縁パッキン(2) INSULATION PACKING(2)		37	MS-1000-68	
5	絶縁パッキン(1) INSULATION PACKING(1)		48	MS-1000-67	
4	平座金 FLAT WASHER	SUS304	37	MS-1000-69	
3	バネ座金 SPRING WASHER	SUS304	24	FOR M20	
2	六角ナット HEX. NUT	SUS304	48	M20	
1	O リング O-RING		1	JISB2401 V585	

承認 APPROVED	JAN 14 '95	三角法 THIRD ANGLE PROJECTION		名称 TITLE	上下装置外寸図
検図 CHECKED	Jan.12.'95	尺度 SCALE	--	CSH-3120 CSH-21120	HULL UNIT (ストローク XDCR TRAVEL 1200mm)
製図 DRAWN	Jan.11.'95	重量 WEIGHT	1120 kg	図番 DWG.NO.	C1257-015-F

FURUNO ELECTRIC CO., LTD.

D-9

FURUNO

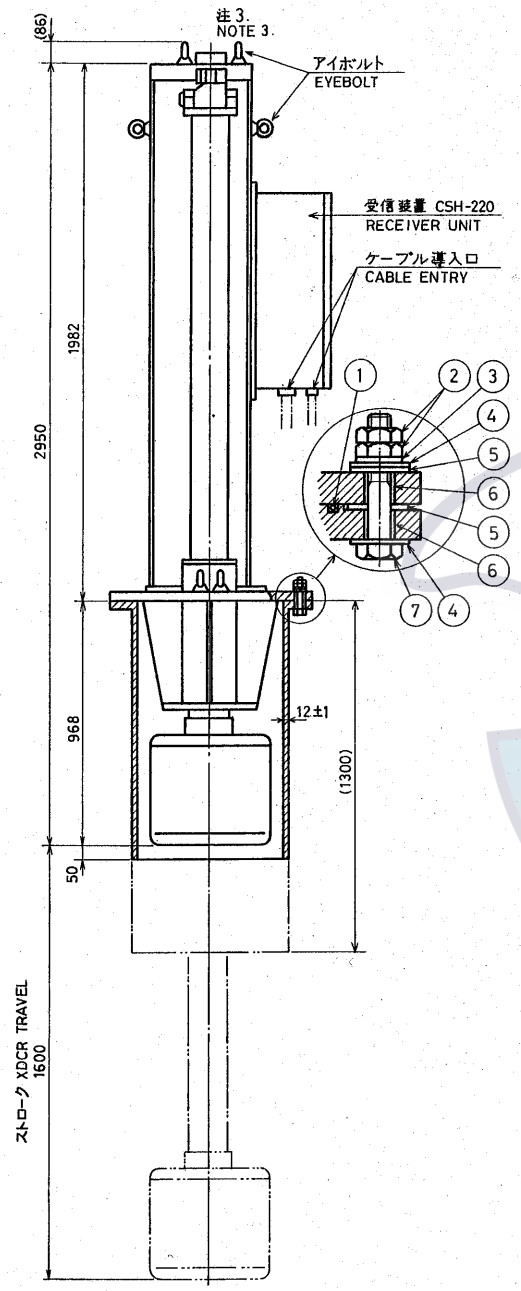

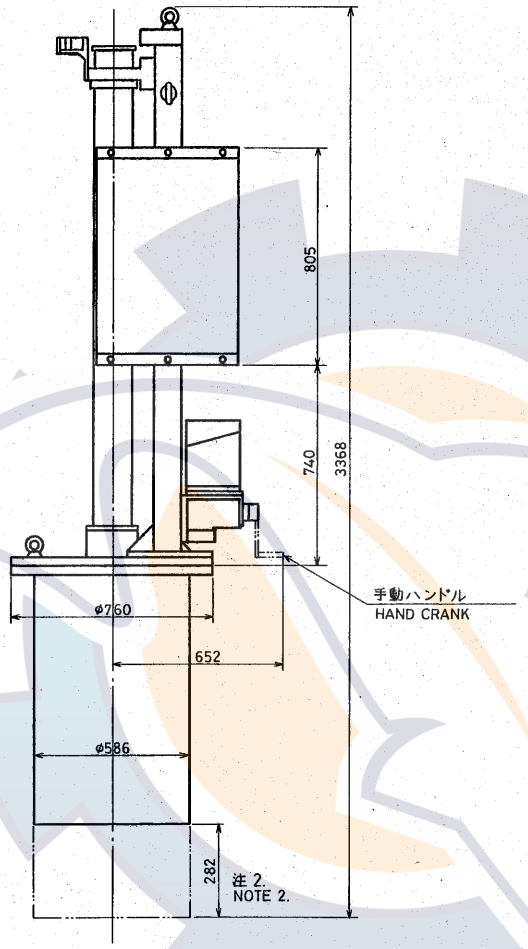

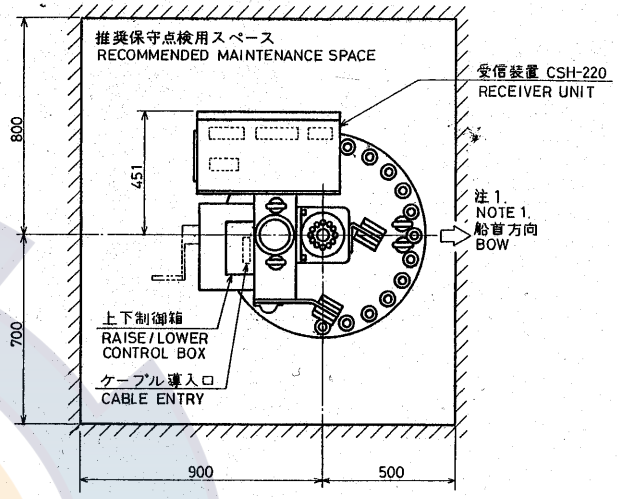

注 1. 架台フランジ上の矢印⇨を船首方向に一致させることが出来ない時は指示装置内で船首線を調整のこと。
2. 装備位置に応じて282mm以内で切断のこと。
3. 架台最上部には アイボルトを利用して必ず防振用のステーを張ること。

NOTE 1. HEADING ADJUSTMENT IS NEEDED IN DISPLAY UNIT IF THE ARROW⇨ ON GALLOWS FLANGE DOES NOT FACE SHIP'S BOW.
2. CUT THE TANK WITHIN 282MM IN LENGTH ACCORDING TO INSTALLATION SITE.
3. UTILIZING EYE-NUTS ON TOP OF UNIT, EXTEND REINFORCEMENT STAYS TO SHIP'S HULL TO MINIMIZE VIBRATION OF UNIT.

品番 ITEM	品名 NAME	材質 MATERIAL	数量 Q'TY	図番 DWG.NO.	摘要 REMARKS
7	六角ボルト HEX.BOLT	SUS304	13	M20×120	
6	絶縁パッキン(2) INSULATION PACKING(2)	ファビリカ	37	MS-1000-68	
5	絶縁パッキン(1) INSULATION PACKING(1)	ファビリカ	48	MS-1000-67	
4	平座金 FLAT WASHER	SUS304	37	MS-1000-69	
3	バネ座金 SPRING WASHER	SUS304	24	FOR M20	
2	六角ナット HEX.NUT	SUS304	48	M20	
1	O-リング O-RING		1	JIS B 2401 V585	

承認 APPROVED	Oct.2.'86 T NAKANO	三角法 THIRD ANGLE PROJECTION		名称 TITLE	上下装置外寸図 HULL UNIT CSH-3160 CSH-21160 (ストローク XDCR TRAVEL 1600mm)
検図 CHECKED	Oct.2.'86 T KODA	尺度 SCALE			
製図 DRAWN	Oct.1.'86	重量 WEIGHT	1180kg	図番 DWG.NO.	C1257-080-C

FURUNO ELECTRIC CO., LTD.

D-10

FURUNO

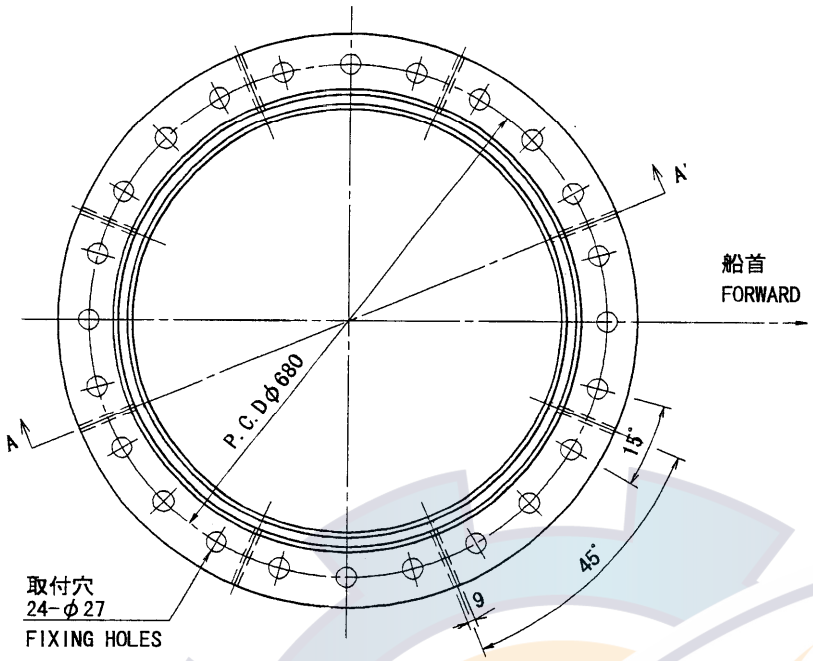

注記

1．装備時24個のボルト穴のうち適当な１個を船首方向に一致させる。

NOTE

1. ONE OF 24 BOLT HOLES SHOULD BE FACED DEAD AHEAD.

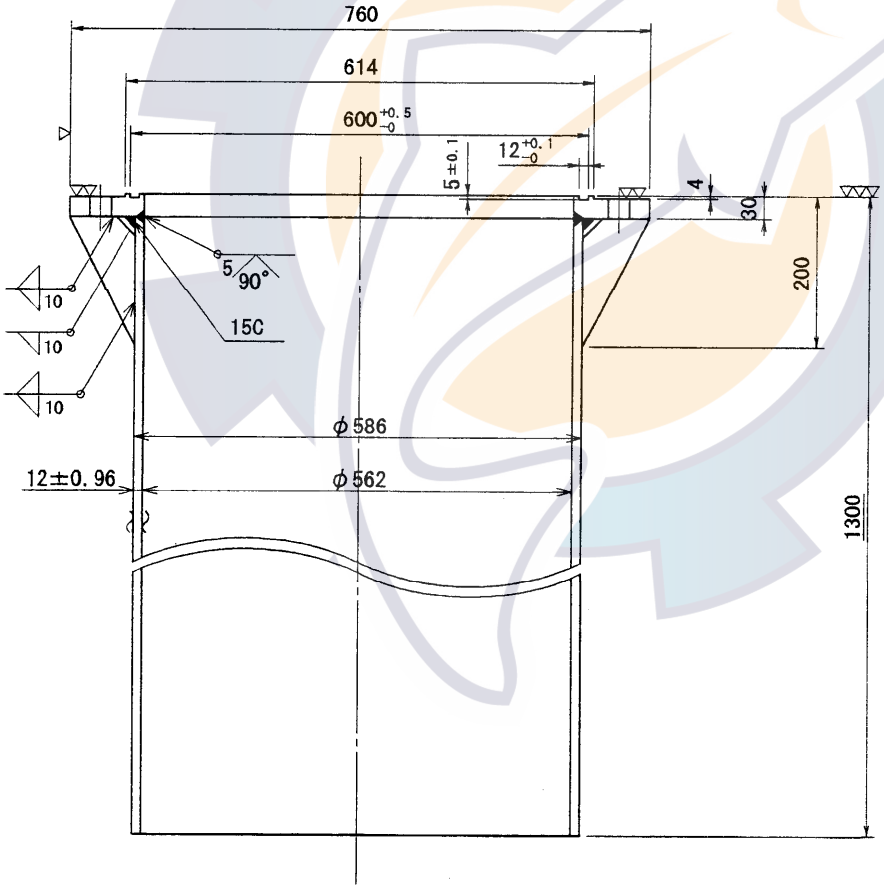

A-A' 断面図
SECTION A-A'

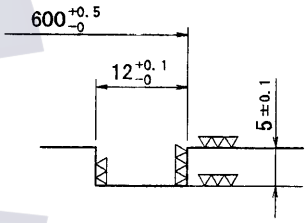

Oリング溝の仕上げ図
FINISHING OF O-RING GROOVE
（尺度 SCALE 1/1）

DRAWN Feb.19 '01 T.YAMASAKI			TITLE
CHECKED Feb 19 '01 Y.Kuno			名称 格納タンク
APPROVED Feb 26 '01 S.Yoshimura	FSV-24 CSH SERIES		外寸図
SCALE 1/10	MASS 258.5 kg		NAME RETRACTION TANK
DWG. No. C1257-074- C			OUTLINE DRAWING

FURUNO ELECTRIC CO., LTD.

FURUNO

Ⓐ キール上（突出） ON KEEL (PROJECTED)

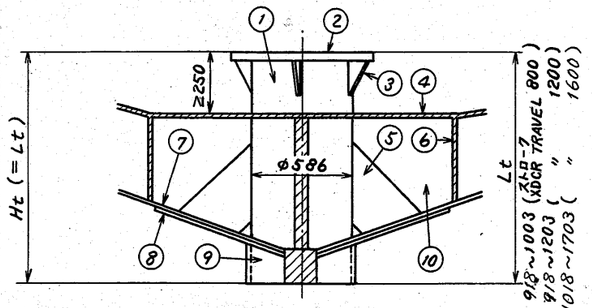

Ⓑ キール横（突出） OFF KEEL (PROJECTED)

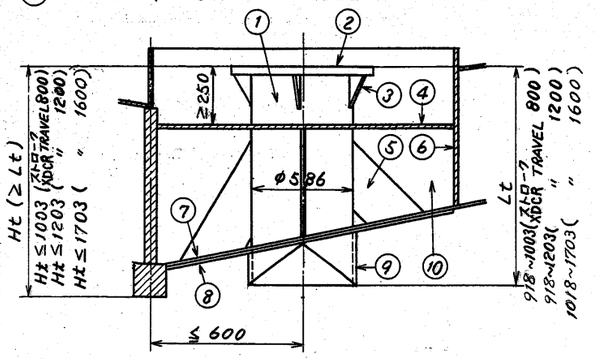

Ⓒ キール横（非突出） OFF KEEL (NOT PROJECTED)

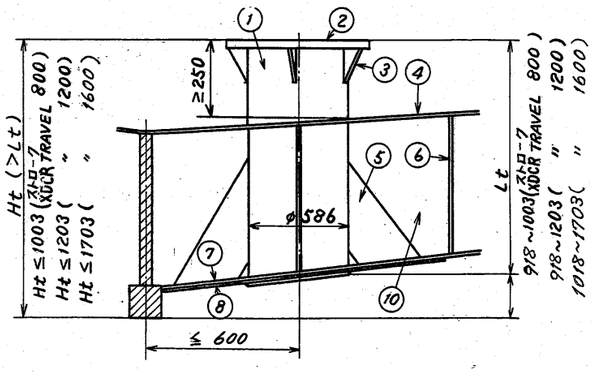

Ⓓ 整流覆 FAIRING PLATE

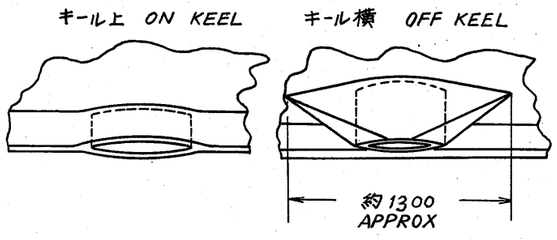

注） CSH-20S/20F/21Fでは 1200/1600ストロークのみ。

FOR 1300mm TANK

装備手順

1. 船底板及び二重船底板に φ586 の穴を明ける。
2. 次の点に注意して格納タンクを船底板に連続スミ肉溶接する。
   * タンクのフランジ面が標準走航時に水平になる事。
   * フランジ面のボルト穴の中心が船首方向になる事。
   * 送受波器を突出させた時に送受信ビームがキールで遮られないように、フランジ面のキールよりの高さ"Ht"を図示の範囲内にする事。

   * タンク下端がキールより下に出ないようにタンクの長さ"Lt"は"Ht"より短くする。且つ、送受波器がタンク下端より出ないように図示の範囲内にする。（標準支給長1300 mm）
3. 格納タンクの周囲に外径 φ1300 以上のダブリング⑧を取り付ける。又、突出兼備（Ⓐ,Ⓑ）の場合には整流覆⑨（D図）を取り付ける。ダブリングと整流覆には、船底板と同じ材質、肉厚のものを使用する事。
4. タンク周囲に油槽がある場合には、隔壁⑥をめぐらせ、コファダム⑩を設ける事。
5. タンク周囲4ヶ所以上に補強板⑤を溶接する。
6. 上下装置本体を格納タンクにボルト締めするのに必要なスペースとして、フランジ面の位置が2重船底板より 250 mm 以上離す。2重船底が高い船には Ⓑ 図の方法で2重船底板を下げ、スペースを確保すること。

INSTALLATION METHOD OF RETRACTION TANK

1. Cut out ∅ 586 hole on hull and inner hull plate.
2. Install tank to hull plate with fillet welding taking the following points into account.
   * Flange face is exactly horizontal at normal Ship's trim.
   * One of 24 bolt holes on flange is faced dead ahead.
   * Allow height of flange face from keel bottom "Ht" mentioned in the drawings, otherwise transducer beam is blocked by the keel when transducer is fully lowered.
   * Tank's length "Lt" should be less than "Ht". If not so, bottom end of tank is placed below keel level. "Lt" is also limited as shown in the drawings so that the transducer can be fully retracted in tank. (The tank is supplied with 1300mm long as standard.)
3. Fit doubling plate ⑧ of outer dia. ∅ 1300 around the tank on hull plate. Fit fairing plate ⑨ referring to the drawing Ⓓ for installation method Ⓐ and Ⓑ. Use same material and thickness of doubling and fairing plate as hull plate.
4. Provide cofferdam around the tank in order to isolate the tank from the oil tank.
5. Install 4 pcs. of reinforcement plates between the tank and the hull plate.
6. Allow clearance of more than 250mm below the flange face for easy bolting. Sink the inner hull plate as shown in the drawing Ⓑ for high inner hull plate.

品番 ITEM	品名 NAME	材質 MATERIAL	数量 Q'TY	図番 DWG.NO.	摘要 REMARKS
10	コファダム COFFERDAM				
9	整流覆 FAIRING PLATE				
8	ダブリング DOUBLING				
7	船底板 HULL PLATE				
6	油槽隔壁 BULKHEAD				
5	補強板 REINFORCEMENT PLATE				
4	二重船底板 INNER HULL PLATE				
3	補強リブ REINFORCEMENT RIB				
2	タンクフランジ TANK FLANGE				
1	格納タンク RETRACTION TANK				

CSH-20/21 SINGLE freq.

承認 APPROVED	Jan 14, '85	三角法 THIRD ANGLE PROJECTION	名称 TITLE 格納タンク装備要領図（鋼船） INSTALLATION METHOD OF RETRACTION TANK(STEEL HULL)
検図 CHECKED	Jan 12, '85 O. Cuda	尺度 SCALE /	
製図 DRAWN	Dec. 17, '84	重量 WEIGHT kg	図番 DWG.NO. C1257-082-C

FURUNO ELECTRIC CO., LTD.

FURUNO

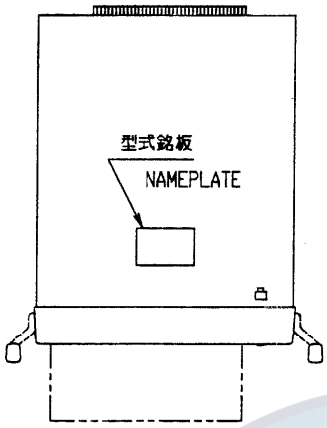

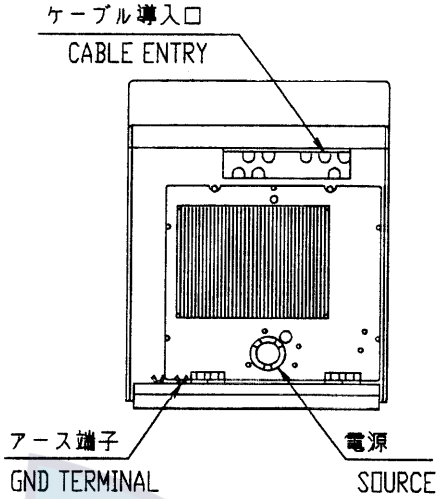

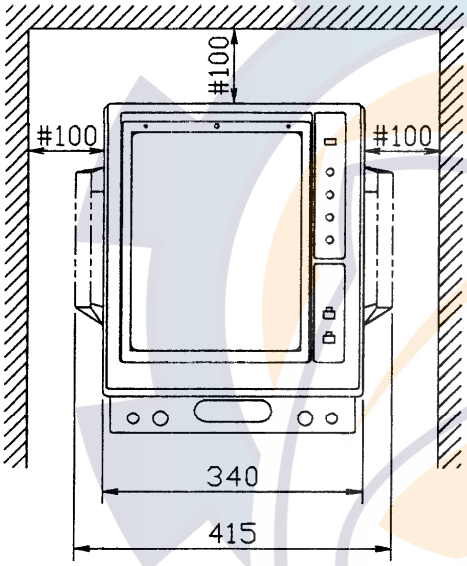

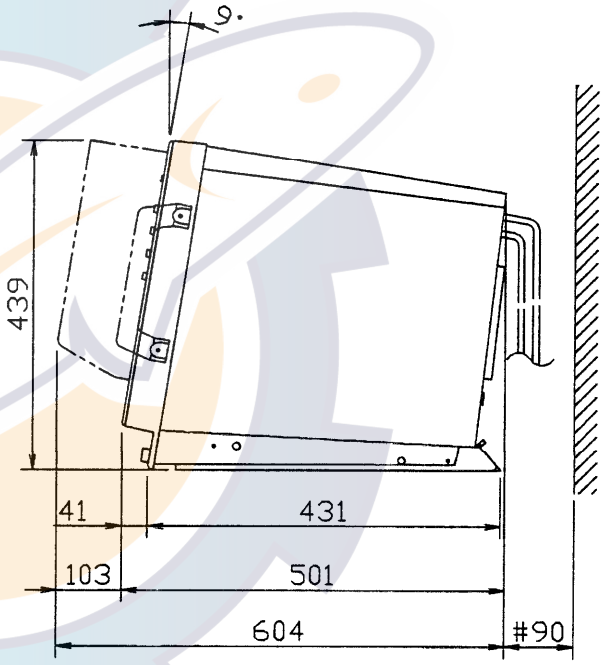

寸法区分（mm） DIMENSION	公差（mm） TOLERANCE
0<L≦50	±1.5
50<L≦100	±2.5
100<L≦500	±3
500<L≦1000	±4

表1 TABLE 1

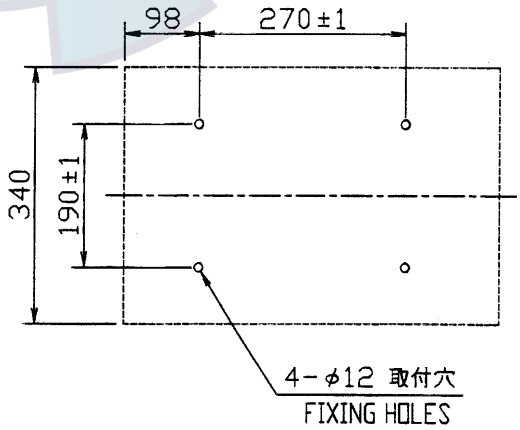

注記
1）#：推奨する最小サービス空間寸法。
2）指定なき寸法公差は表1による。

NOTE
1. #: RECOMMENDED SERVICE CLEARANCE
2. TABLE 1 INDICATES TOLERANCE OF DIMENSIONS.

DRAWN Jul. 11 '01 T.YAMASAKI			TITLE CSH-106
CHECKED July 6 '01 Y.K			名称 リモートディスプレイ
APPROVED July 6 '01 Y.K			外寸図
SCALE 1/10 MASS 25 ±10% kg			NAME REMOTE DISPLAY UNIT
DWG.No. C1286-G03- D			OUTLINE DRAWING

FURUNO ELECTRIC CO., LTD.

FURUNO

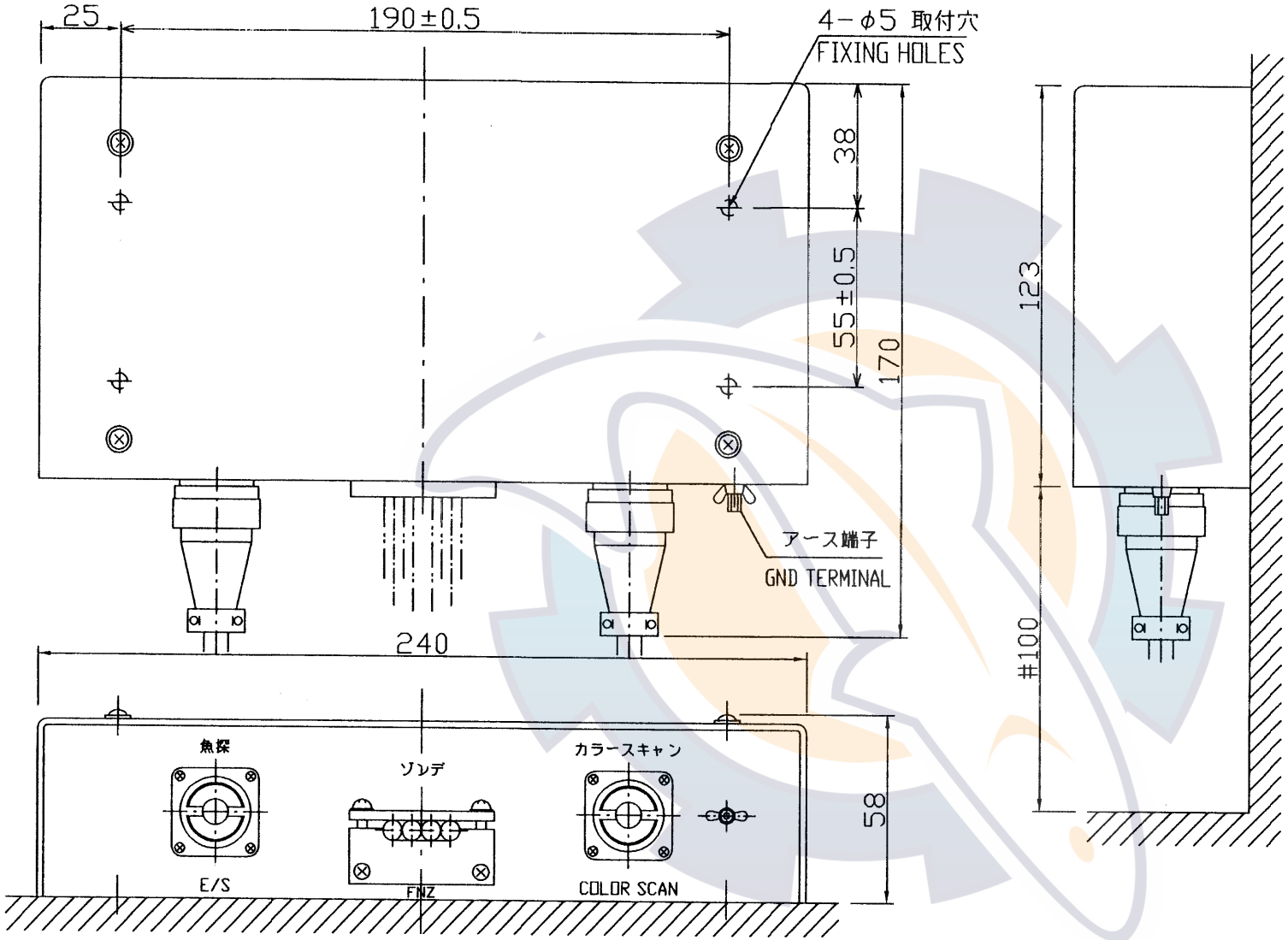

寸法区分(mm) DIMENSION	公差(mm) TOLERANCE
0 < L ≦ 50	±1.5
50 < L ≦ 100	±2.5
100 < L ≦ 500	±3

表1 TABLE 1

注記

1）#：推奨する最小サービス空間寸法。
2）指定なき寸法公差は表1による。

NOTE

1. #: RECOMMENDED SERVICE CLEARANCE.
2. TABLE 1 INDICATES TOLERANCE OF DIMENSIONS.

DRAWN Jul. 11 '01 T. YAMASAKI		TITLE CS-170
CHECKED Jul. 16 '01 Y. K		名称 ネットゾンデ接続箱
APPROVED Jul. 16 '01 Y. K		外寸図
SCALE 1/2	MASS 2 ±10% kg	NAME NET JOINT BOX
DWG.No. C1233-007- D		OUTLINE DRAWING

FURUNO ELECTRIC CO., LTD.

D-14

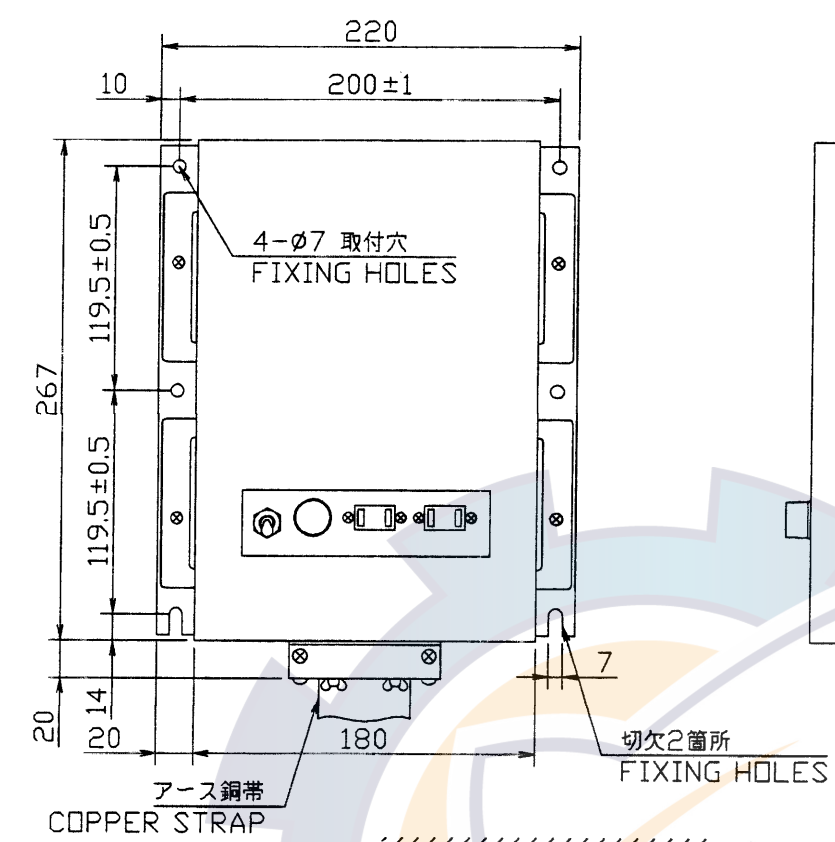

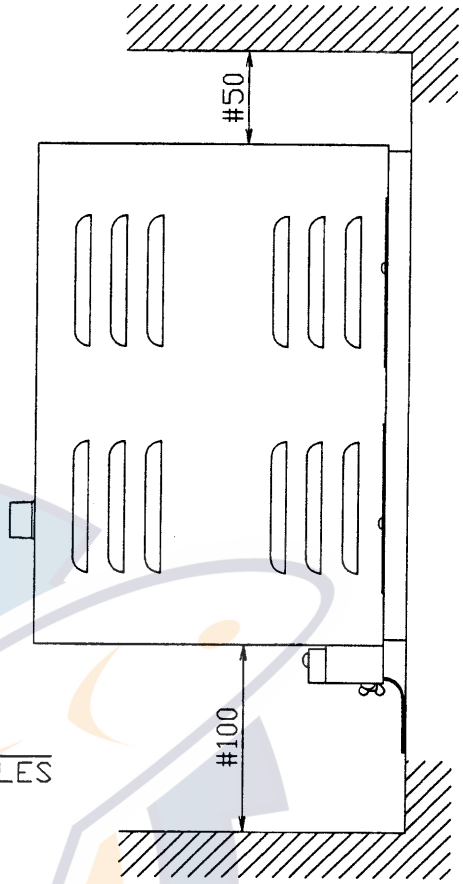

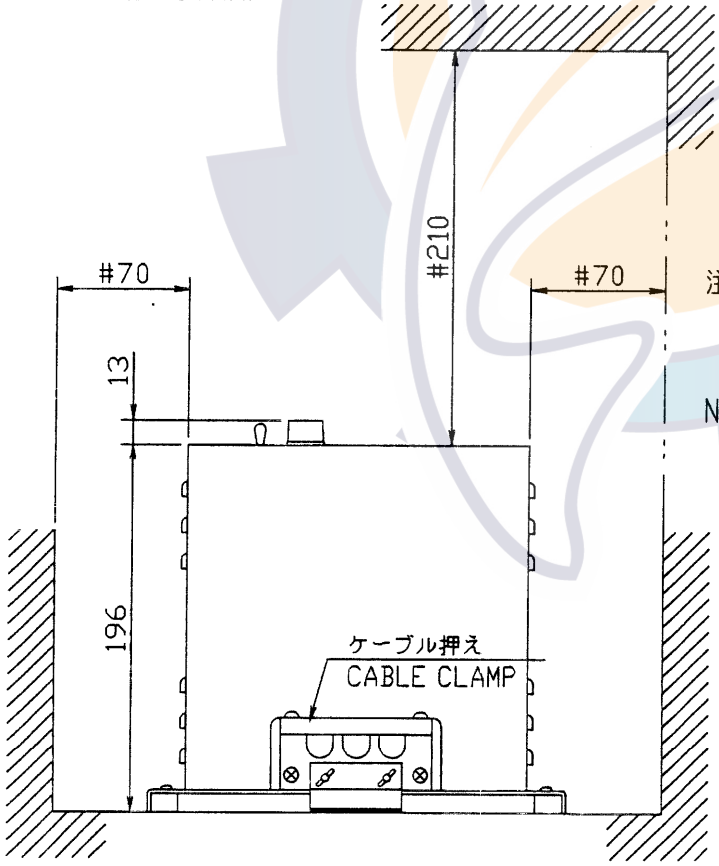

寸法区分(mm) DIMENSION	公差(mm) TOLERANCE
0 < L ≦ 50	±1.5
50 < L ≦ 100	±2.5
100 < L ≦ 500	±3

表1 TABLE 1

注記
1) #：推奨する最小サービス空間寸法
2) 指定なき寸法公差は表1による。

NOTE
1. #: RECOMMENDED SERVICE CLEARANCE.
2. TABLE 2 INDICATES TOLERANCE OF DIMENSIONS.

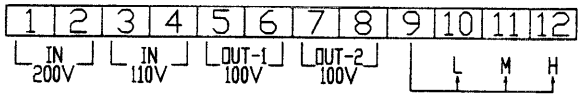

OUT-1または2の出力がAC100Vになるように、10,11または12番端子にジャンパー線をつなぐ。

CONNECT JUMPER WIRE TO 11,12 OR 13 TERMINAL SO THAT 100VAC COMES OUT AT OUT-1 OR 2 TERMINALS.

DRAWN Jul. 16 '01 T.YAMASAKI		TITLE	PT-400
CHECKED July 16 '01 Y.K		名称	電圧変圧器
APPROVED July 16 '01 Y.K	CSH SERIES		外寸図
SCALE 1/4 MASS 22 ±10% kg		NAME	STEP-DOWN TRANSFORMER
DWG.No. C0005-002-C			OUTLINE DRAWING

FURUNO ELECTRIC CO., LTD.

FURUNO

S - 1

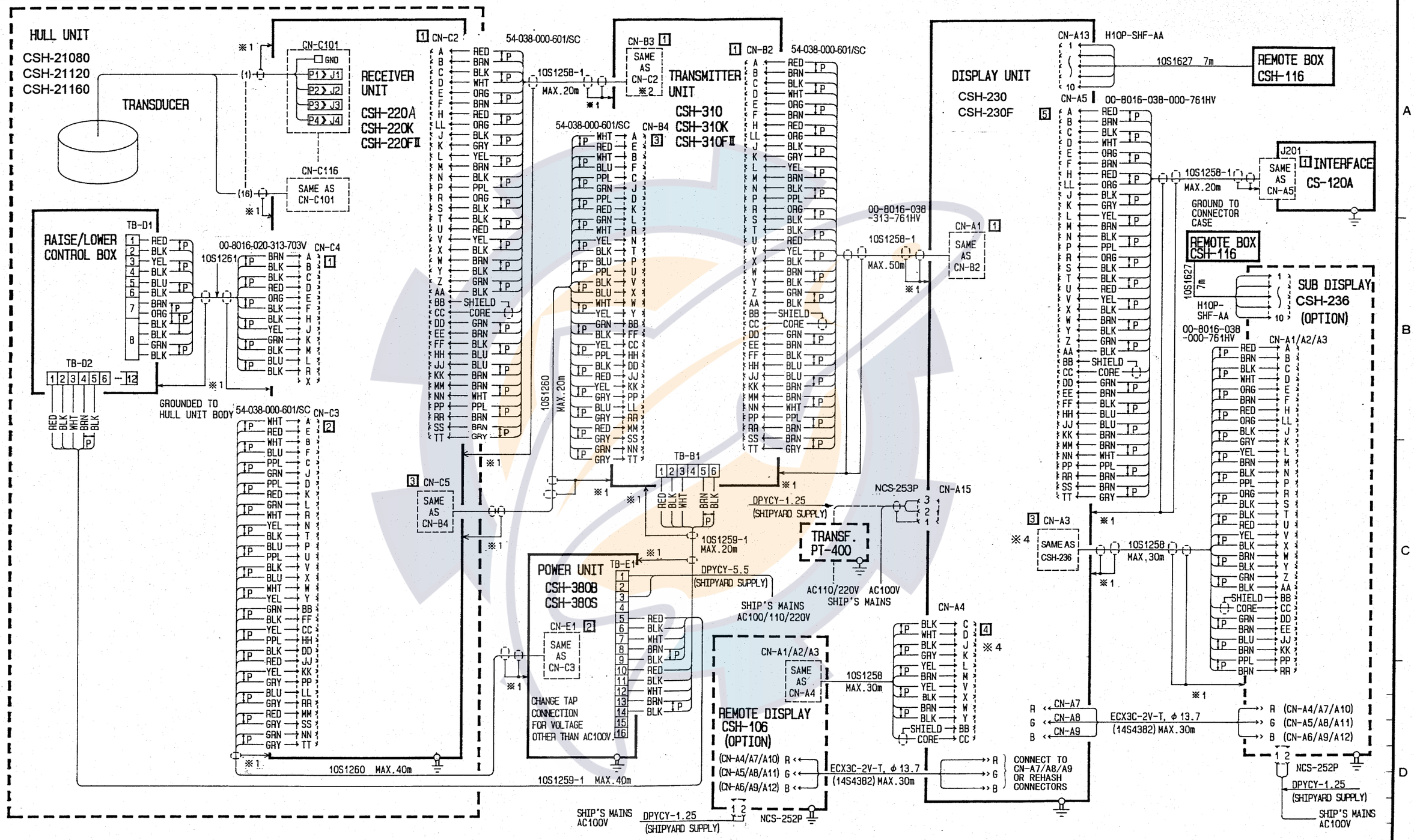

NOTE

1. ※1. GROUNDED THRU CABLE CLAMP.
2. NUMERAL IN □ SHOWS POSITION OF CONNECTOR GUIDE PIN (LARGE) GUIDE PIN (SMALL) IS SET ALWAYS TO POSITION "1".
3. ※2. CONNECT SHIELD TO CABLE GLAND INSTEAD OF "TT".
4. DO NOT CONNECT RGB LINE (CONNECTOR FF/HH, MM/NN, SS/TT) OF CABLE 10S1258, OR INTERFERENCE MAY APPEARS ON THE DISPLAY.

DRAWN: May 14 '98 T.YAMASAKI			TYPE: CSH-23/23F/23K
CHECKED: May 15 '98 K.Kusunoki			名称: カラースキャニングソナー
APPROVED: May 15 '98 K.Kusunoki			相互結線図
SCALE: /	MASS: kg	APPLICABLE TO; (MODEL) / BLOCK NO.	NAME: COLOR SCANNING SONAR
DWG NO. E1309-C01- D			INTERCONNECTION DIAGRAM

FURUNO ELECTRIC CO., LTD.

FURUNO

S - 1a

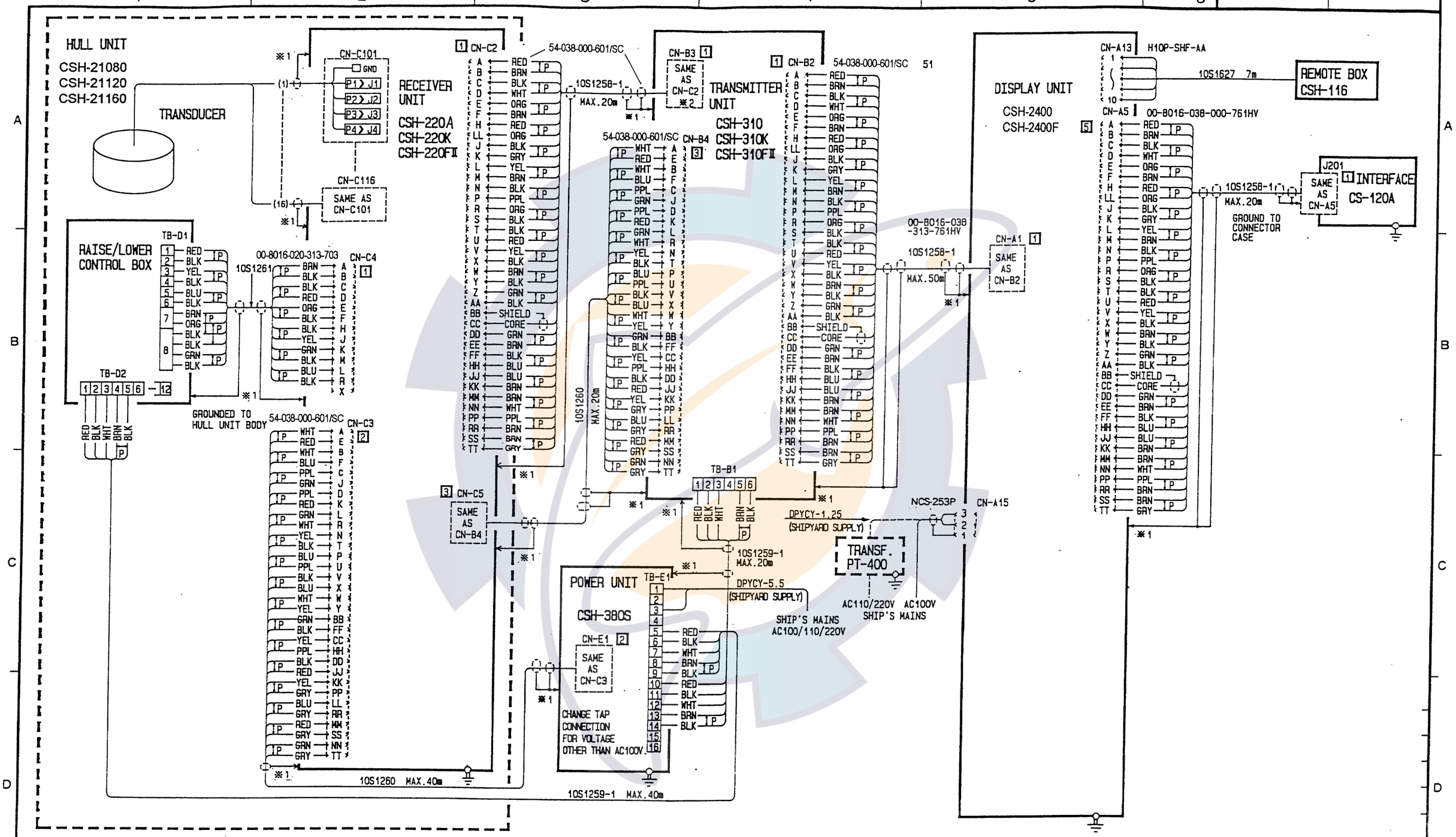

NOTE

1. ※1. GROUNDED THRU CABLE CLAMP.
2. NUMERAL IN □ SHOWS POSITION OF CONNECTOR GUIDE PIN (LARGE) GUIDE PIN (SMALL) IS SET ALWAYS TO POSITION "1".
3. ※2. CONNECT SHIELD TO CABLE GLAND INSTEAD OF "TT".

DRAWN Mar.12'98 T.YAMASAKI			TYPE CSH-24/24F
CHECKED Mar12'98 K.Kusunoki			名称 カラースキャニングソナー
APPROVED Mar12'98 K.Kusunoki			相互結線図
SCALE /	MASS kg	APPLICABLE TO; (MODEL) / BLOCK NO.	NAME COLOR SCANNING SONAR
DWG NO. E1310-C01- B			INTERCONNECTION DIAGRAM

FURUNO ELECTRIC CO., LTD.

FURUNO

S - 2

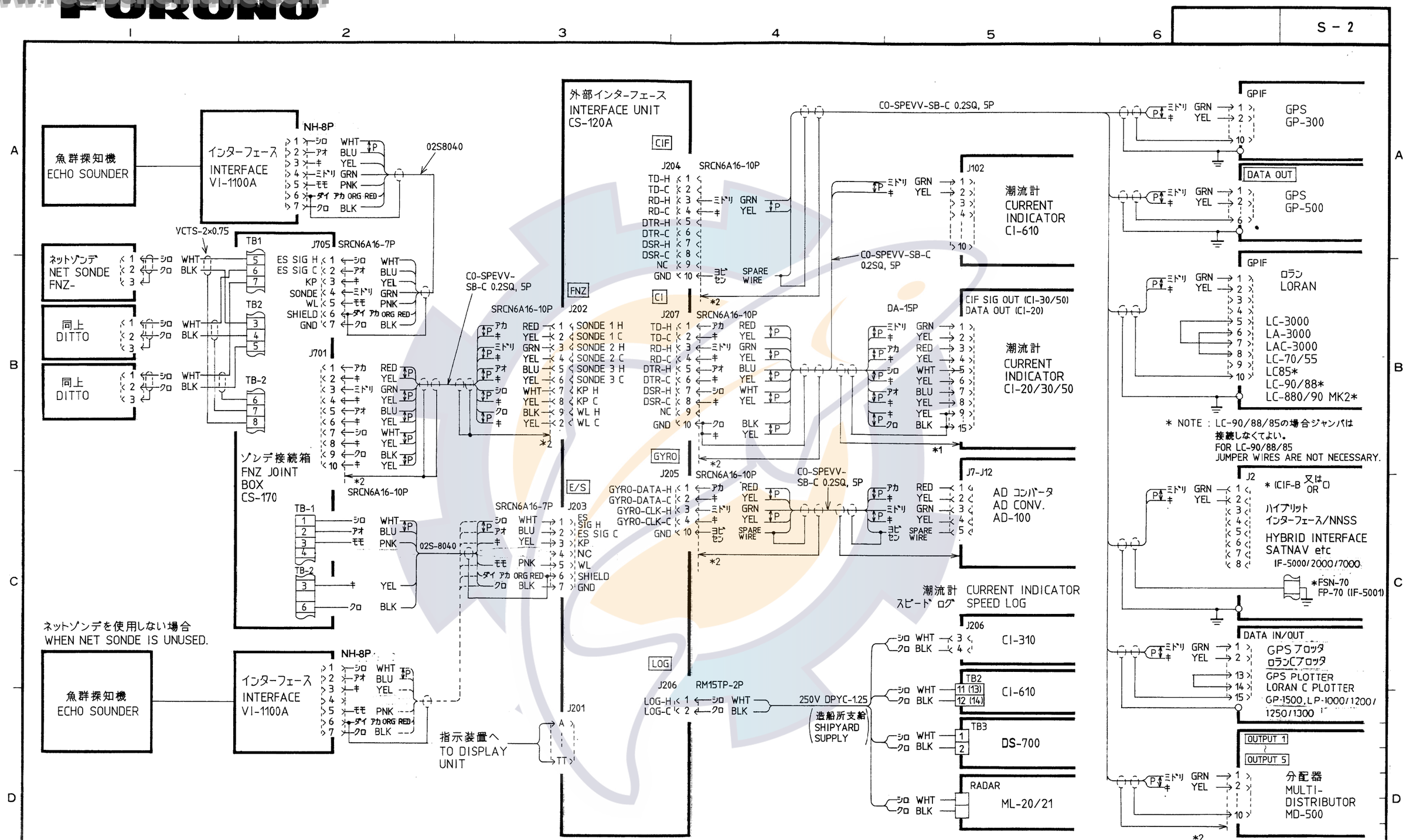

*1 ケーブルクランプでアースにおとす。
GROUND THROUGH CABLE CLAMP.

*2 コネクタケースでアースにおとす。
GROUND THROUGH CONNECTOR CASE.

DRAWN Nov 22 '99 T.YAMASAKI			TYPE CS-120A
CHECKED Nov 22 '99 K.Kusumoto			名称 外部インターフェイス
APPROVED Nov 22 '99 K.Kusumoto			相互結線図
SCALE /	MASS kg	APPLICABLE TO; (MODEL) / BLOCK NO.	NAME INTEFACE UNIT
DWG NO. C1238-003- K			INTERCONNECTION DIAGRAM

FURUNO ELECTRIC CO., LTD.

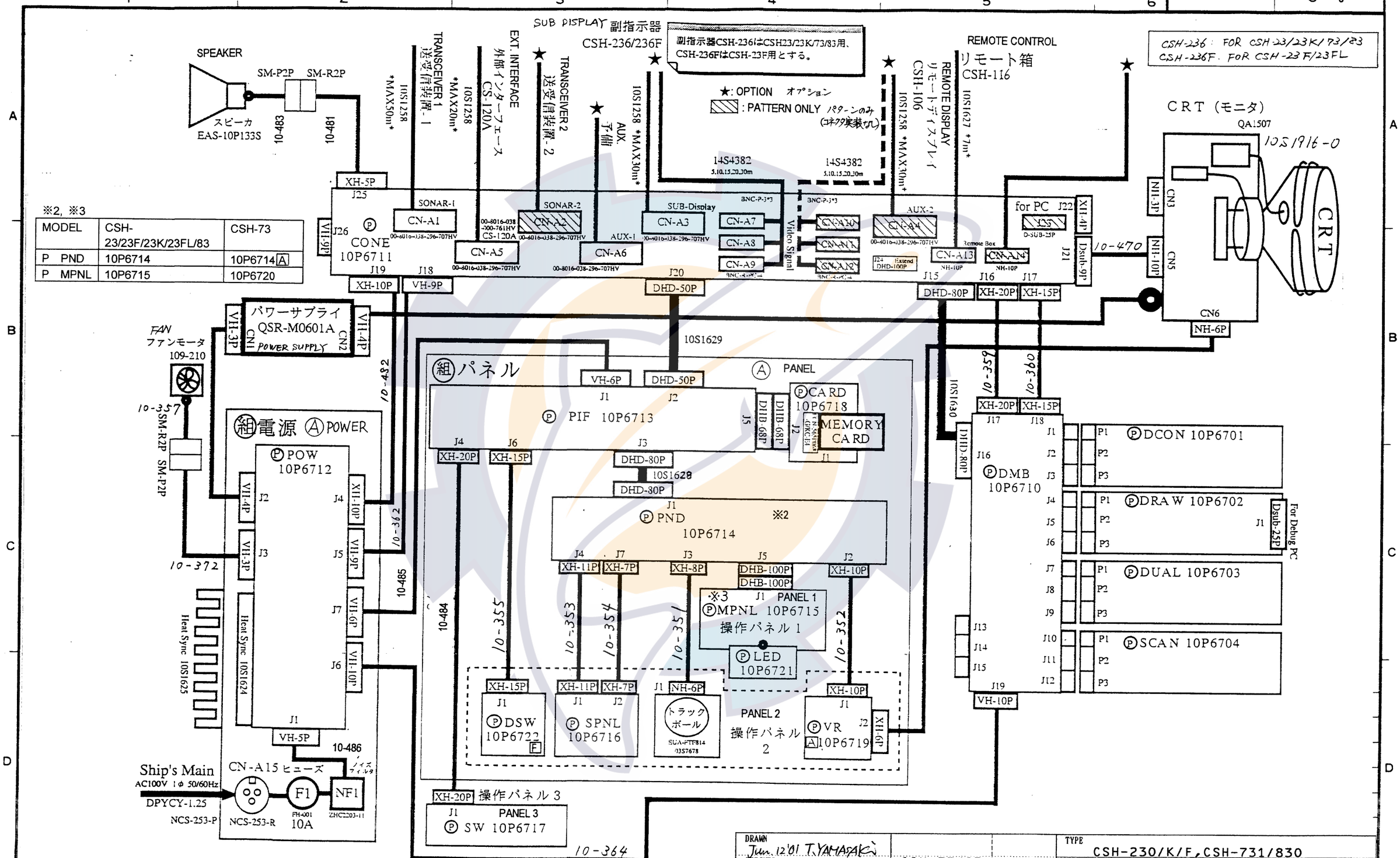

DRAWN Jun. 12'01 T.YAMASAKI			TYPE CSH-230/K/F, CSH-731/830
CHECKED June 12 '01 Y.Kin	CSH-73/83 CSH-23FL		名称 指示装置 (総合)
APPROVED June 12.'01	CSH-23K/F CSH-23		回路図
SCALE / MASS kg	APPLICABLE TO: (MODEL)	BLOCK NO.	NAME DISPLAY UNIT(GENERAL)
DWG NO. C1304-K01- C	10-065-0013- 5		SCHEMATIC DIAGRAM

FURUNO ELECTRIC CO., LTD.

FURUNO

S - 3a

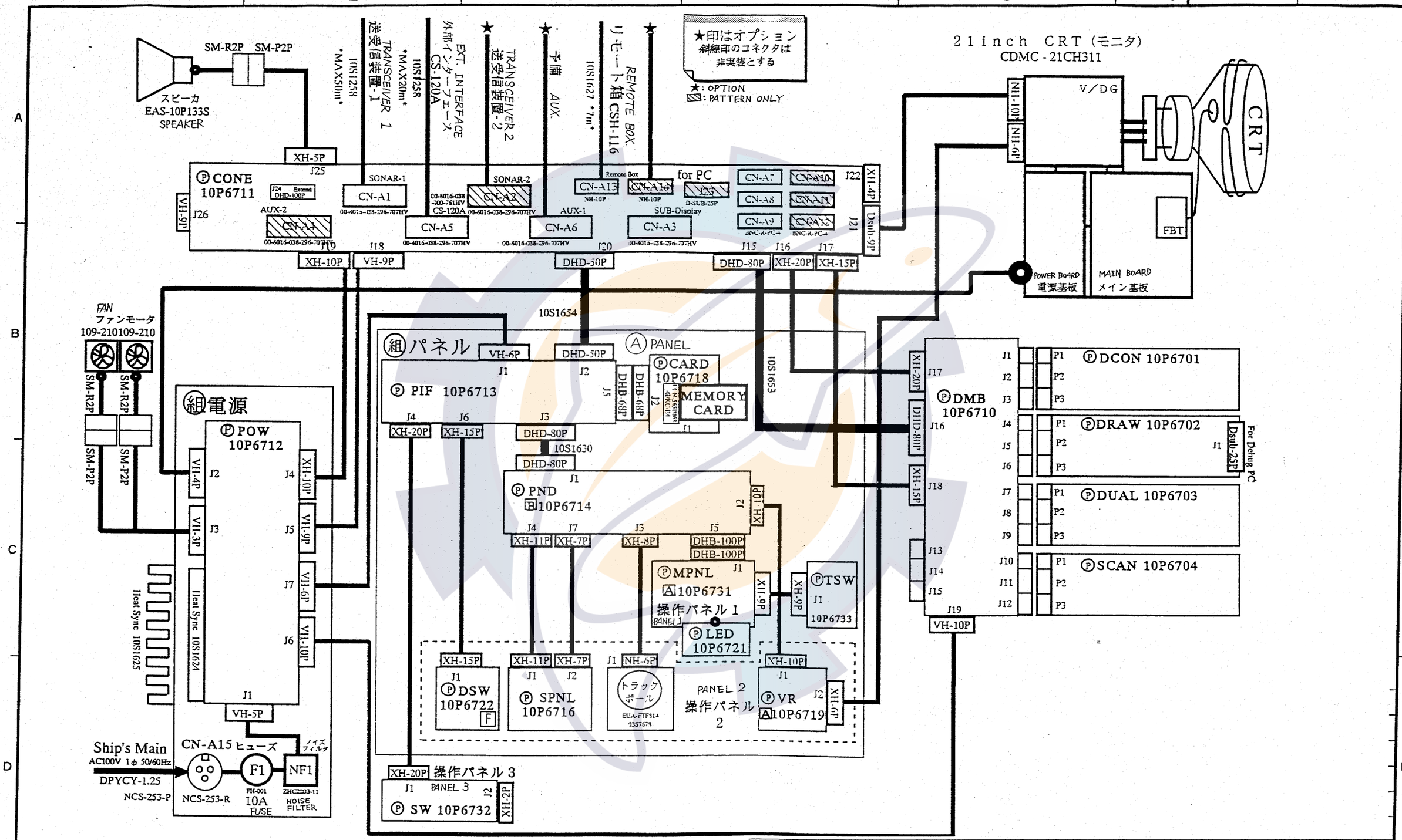

DRAWN Apr. 8 '98 T. Yamasaki			TYPE CSH-2400/F/FL, CSH-8400
CHECKED Apr 8 '98 K. Kusunoki	CSH-84 CSH-24FL CSH-24F CSH-24		名称 指示装置
APPROVED Apr. 8 '98 K. Kusunoki			回路図
SCALE / MASS kg	APPLICABLE TO; (MODEL)	BLOCK NO.	NAME DISPLAY UNIT
DWG NO. C1310-K01- B	10-064-0001- 2		SCHEMATIC DIAGRAM

FURUNO ELECTRIC CO., LTD.

FURUNO

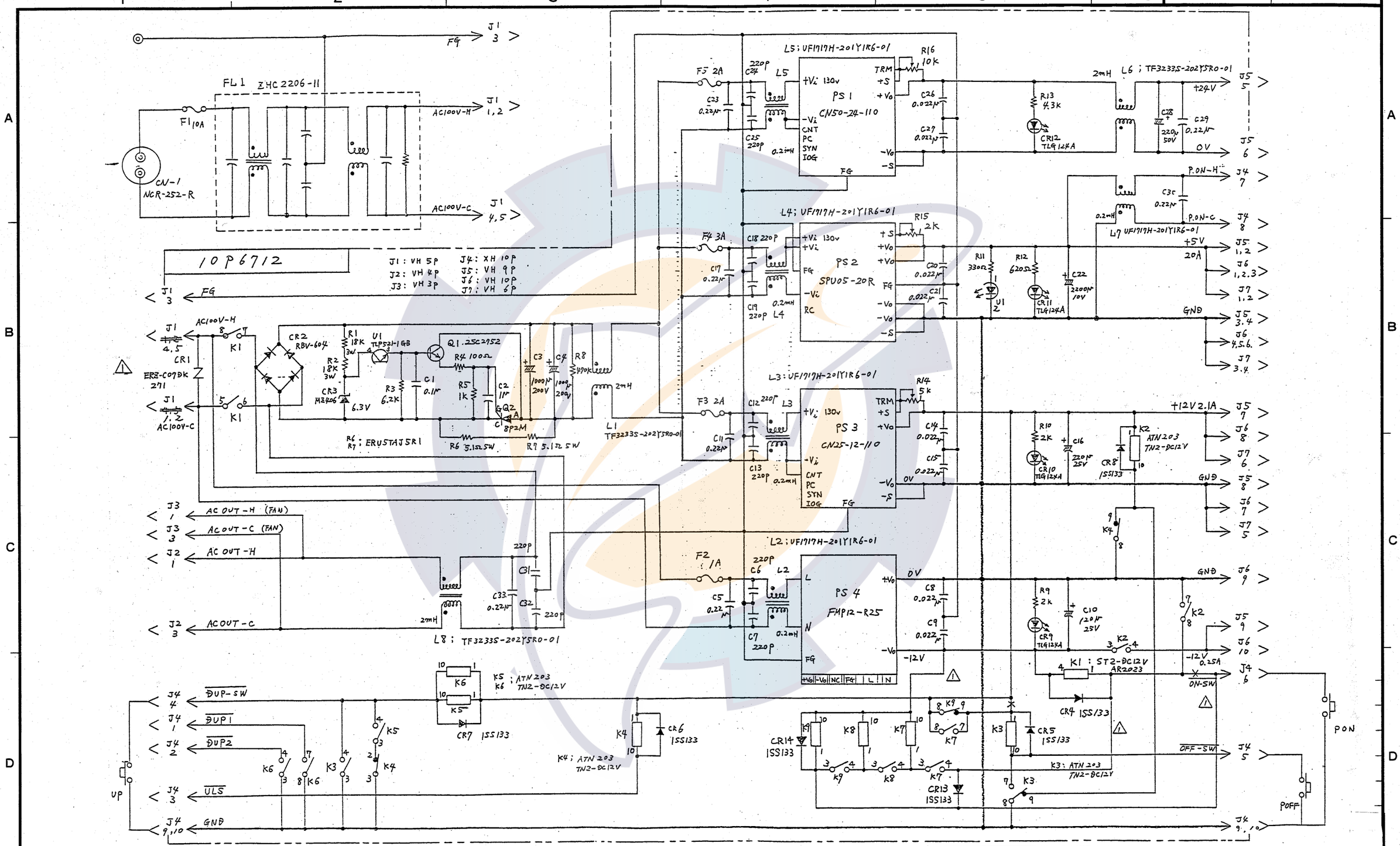

REMARKS	CSH72 CSH71 CSH22F CSH22		TYPE 10P6712
			名称 POW基板
DRAWN M.USUDA	CSH21F CSH21		NAME POW BOARD
SCALE / MASS kg	APPLICABLE TO; (MODEL)	BLOCK NO.	DWG NO. C1286-K03- A

FURUNO ELECTRIC CO., LTD.

FURUNO

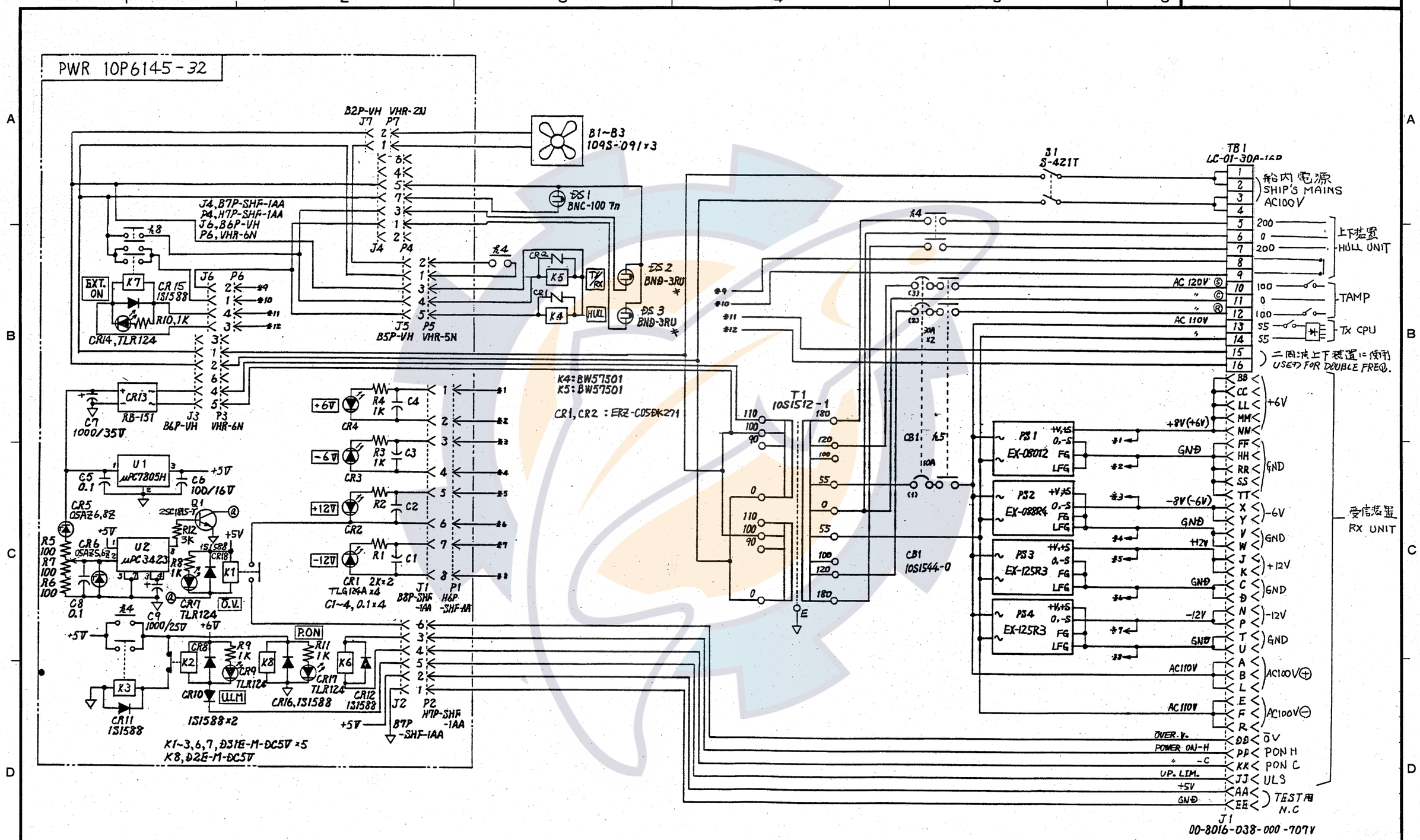

REMARKS			TYPE CSH380S
	CSH22F CSH21F CSH20S CSH20FM2 CSH20F		名称 電源装置
DRAWN M.USUDA			NAME POWER SUPPLY UNIT
SCALE /	MASS kg	APPLICABLE TO; (MODEL) / BLOCK NO.	DWG NO. C1287-K03- A

FURUNO ELECTRIC CO., LTD.

FURUNO

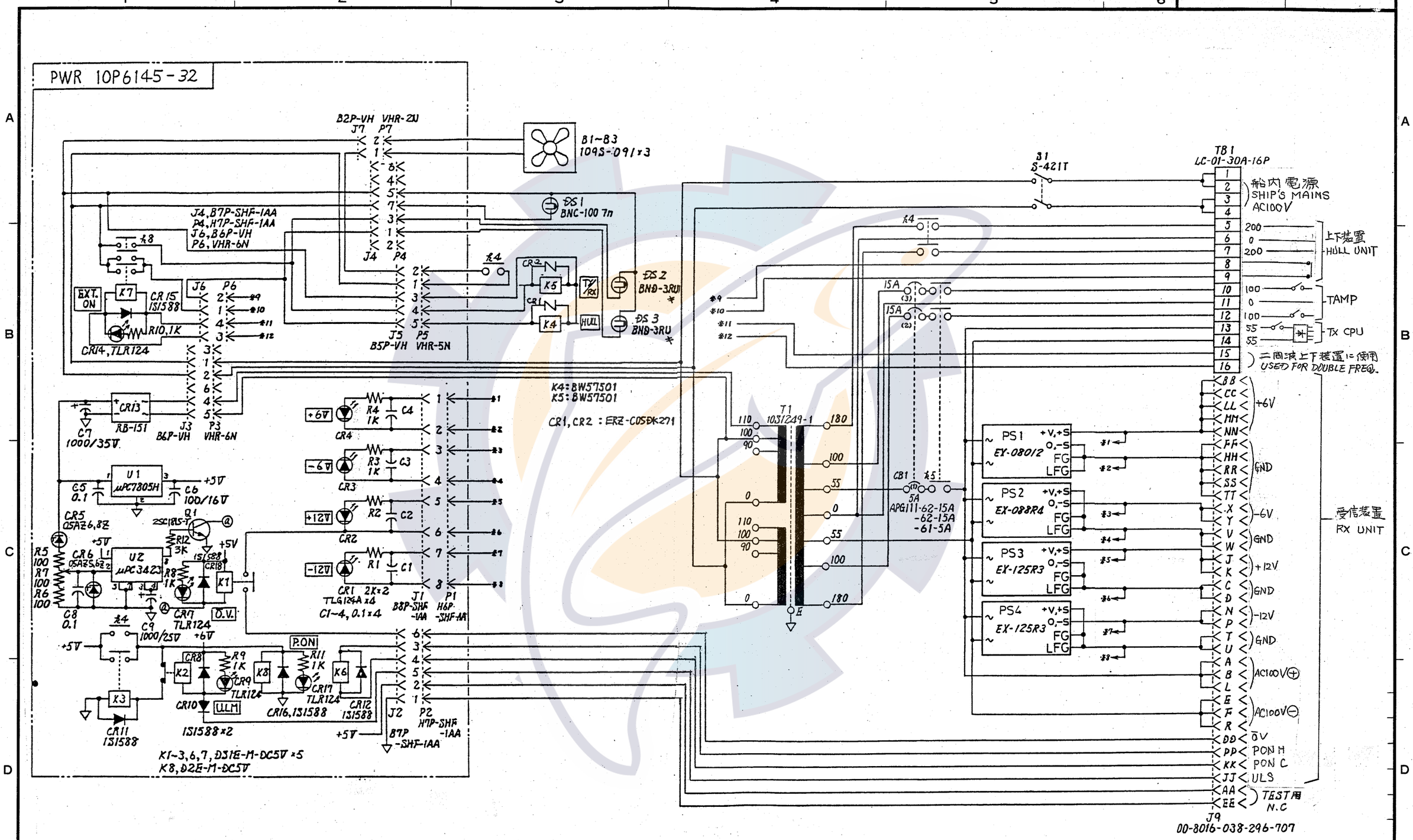

CSH-20/26W/27W

承認 APPROVED		名称 TITLE	CSH-380B 電源装置 POWER SUPPLY UNIT
検図 CHECKED	July·23·'85		
製図 DRAWN	JULY·18·'85 T.Ayama	図番 DWG.NO.	C1257-066-D

FURUNO ELECTRIC CO., LTD.

FURUNO

S - 7

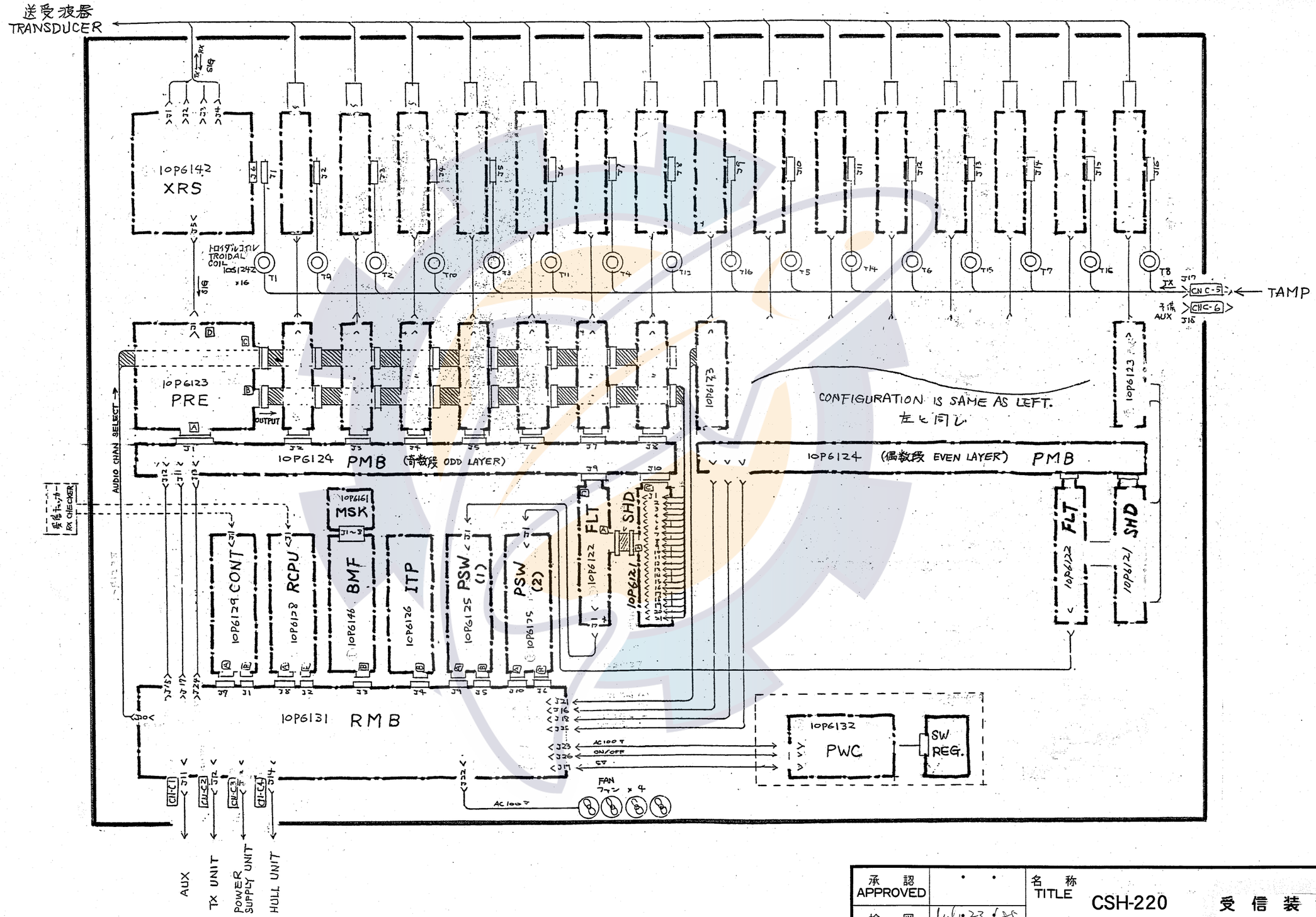

承認 APPROVED		名称 TITLE	CSH-220 受信装置 CSH-220F II RECEIVER UNIT
検図 CHECKED	July. 23 '85		
製図 DRAWN	JULY. 18. '85 T. Ogawa	図番 DWG. NO.	C1257-046-B

FURUNO ELECTRIC CO., LTD.

FURUNO

S - 8

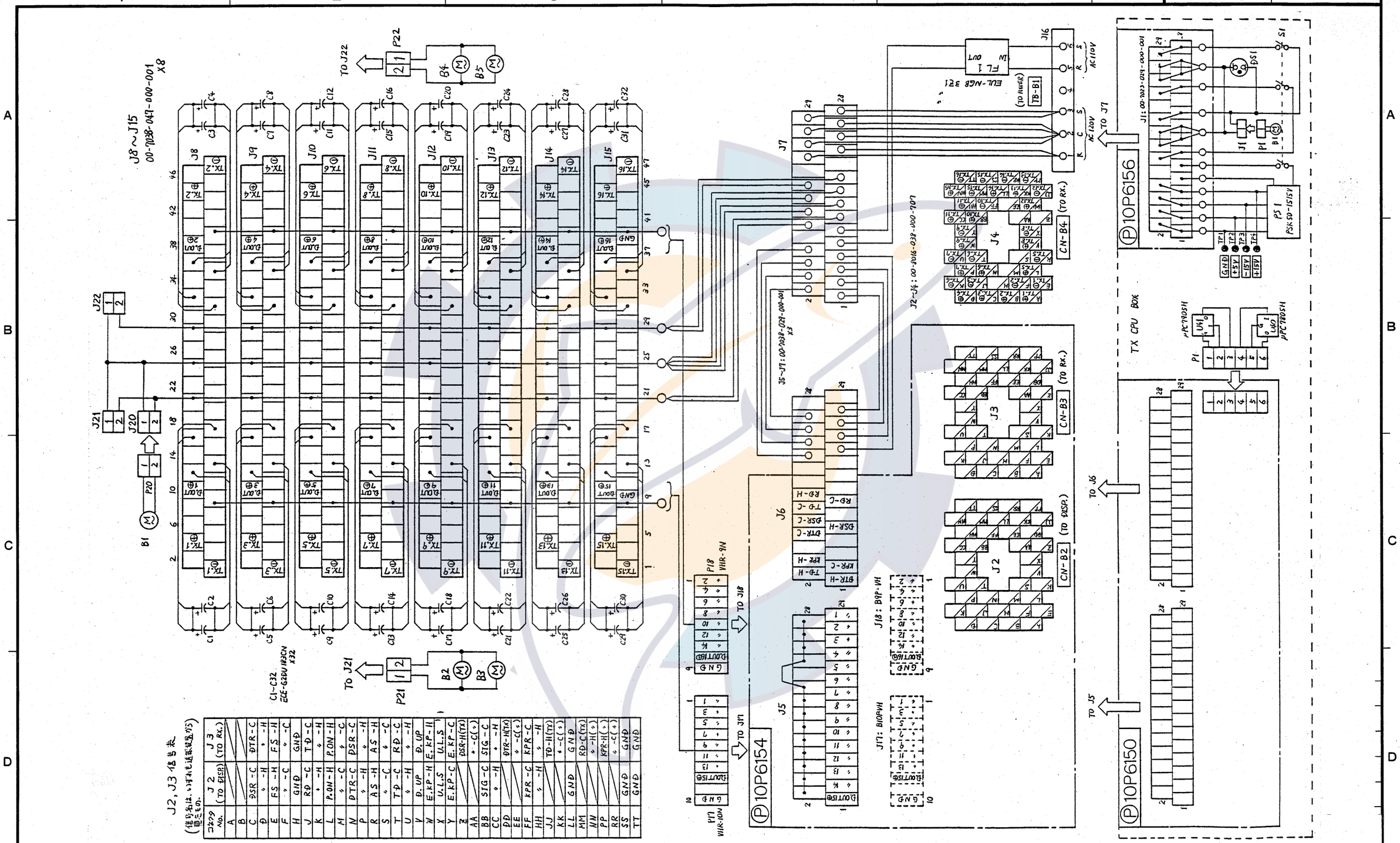

J2, J3 信号表

(信号名は、いずれも送信装置から見たもの。)

コネクタ No.	J2 (TO DISP.)	J3 (TO RX.)
A		
B		
C	DSR -C	DTR -C
D	" -H	" -H
E	FS -H	FS -H
F	" -C	" -C
H	GND	GND
J	RD -C	TD -C
K	" -H	" -H
L	P.ON -H	P.ON -H
M	" -C	" -C
N	DTR -C	DSR -C
P	" -H	" -H
R	AS -H	AS -H
S	" -C	" -C
T	TD -C	RD -C
U	" -H	" -H
V	D.UP	D.UP
W	E.KP -H	E.KP -H
X	U.L.S	U.L.S
Y	E.KP -C	E.KP -C
Z		DSR-H(TX)
AA		" -C(+)
BB	STG -C	STG -C
CC	" -H	" -H
DD		DTR-H(TX)
EE		" -C(+)
FF	KPR -C	KPR -C
HH	" -H	" -H
JJ		TD-H(TX)
KK		" -C(+)
LL	GND	GND
MM		RD-C(TX)
NN		" -H(+)
PP		KPR-H(+)
RR		" -C(+)
SS	GND	GND
TT	GND	GND

REMARKS		CSH22F CSH21F CSH20S CSH20F		TYPE CSH310S/F2
				名称 送信装置
DRAWN				NAME TRANSMITTER UNIT
SCALE /	MASS kg	APPLICABLE TO; (MODEL)	BLOCK NO.	DWG NO. C1287-K01- A

FURUNO ELECTRIC CO., LTD.