www.reelschematic.com

FURUNO

INSTALLATION MANUAL

DISPLAY SWITCH BOX

MODEL CSH-5070

FURUNO ELECTRIC CO., LTD.
NISHINOMIYA, JAPAN

www.reelschematic.com

©FURUNO ELECTRIC CO., LTD.

9-52, Ashihara-cho,
Nishinomiya, Japan 662

Telephone: 0798-65-2111
Telefax: 0798-65-4200

·Your Local Agent/Dealer

FIRST EDITION : NOV 1992

All rights reserved. Printed in Japan

PUB. No. IME-10040-A
(MAUS) CSH-5070

0008048570 0

www.reelschematic.com

Table of Contents

SPECIFICATIONS OF CSH-5070 DISPLAY SWITCH BOX 1

INSTALLATION 2

1. Preparing Cable/Connector 2
2. Mounting 3
3. Cable Fabrication 3
   - Cable Construction 3
   - Cable Fabrication 3
   - Connecting Contact 4
   - Inserting Contact Pin into Connector Housing 4
   - Assembling Connector Housing 5
   - Clamping Cable 5
4. Connection of Grounding Wire 5
5. After-Installation Setting 6
6. Outline Drawing 7
7. Interconnection Diagram 8

www.reelschematic.com

SPECIFICATIONS OF CSH-5070 DISPLAY SWITCH BOX

1. Application — Switching two display units of color scanning sonar CSH-5.

2. Operation Mode

Single: Of two display units, only the one turned on first opreates.

Dual: Two display units operate. The one turned on first operates as master display unit and the other as sub-display unit. Sonar operation is possible only on master display unit.

3. Power Supply — 100VAC, 50/60Hz, 1ø

4. Coating Color — Munsell 2.5G7/2, New Tone No.5

5. Ambient Temperature & Relative Humidity — 0°C to +50°C, 85% or less

COMPLETE SET

No.	Name	Type	Code No.	Qty	Weight (kg)	Remarks
1	Display Switch Box	CSH-5070	000-068-956	1	2	
2	Installation Materials	CP10-03200	000-999-750	1 set		

INSTALLATION MATERIALS

No.	Name	Type	Code No.	Qty	Remarks
1	Connector	00-8016-038-000751HV	000-118-308	3	
2	Contact	60-8017-0313-00-339	000-519-542	114	
3	Crimp-on Lug	FV1.25-4	000-538-114	2	
4	Grounding Lead	0.5SQ, *150mm*	006-998-030	1	

www.reelschematic.com

INSTALLATION

1. Preparing Cable/Connector

In addition to the standard installation materials supplied for the CSH-5 and CSH-5070, two cables (marked *3 in the drawing below) should be separately prepared for interconnection between the Display Switch Box and the display unit.

No.	Name	Type	Code No.	Remarks
1	Signal Cable Assembly	S10-6-15(38P),15M	006-976-580	Select two.
		S10-6-30(38P),30M	006-976-590	
		S10-6-50(38P),50M	006-976-600	

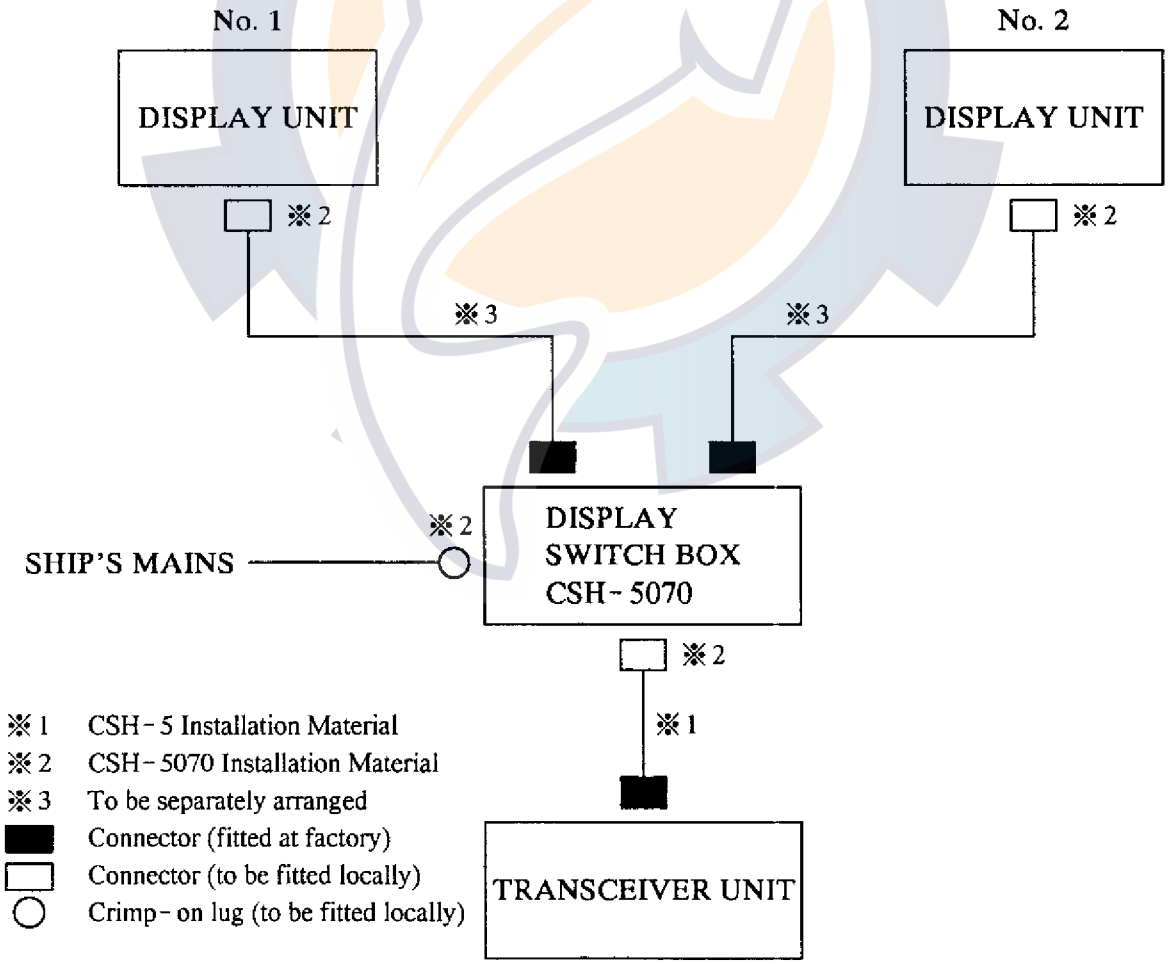

www.reelschematic.com

2. Mounting

1) The Display Switch Box can be installed on the floor or bulkhead. Select a well ventilated location with low humidity.

2) Mounting bolts and nuts are not supplied. Prepare them locally.

3. Cable Fabrication

The interconnection cables are not fabricated at one end. Install the connector at installation.

Cable Construction

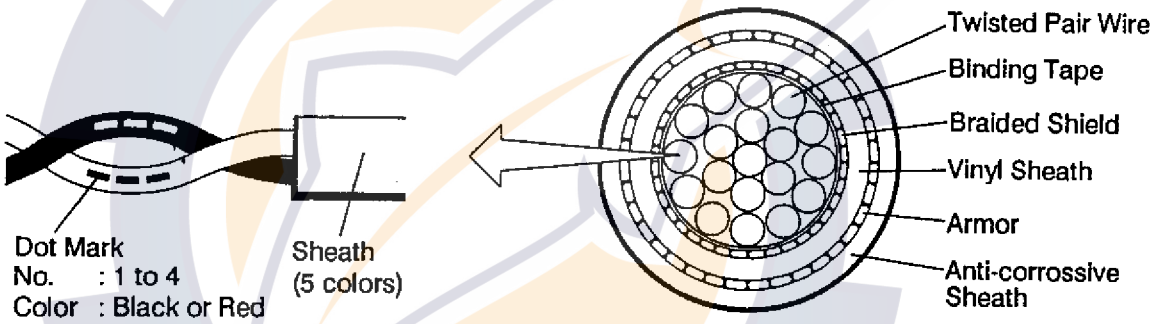

Cable Fabrication

Remove the anticorrosive sheath, armor and vinyl sheath as shown below.

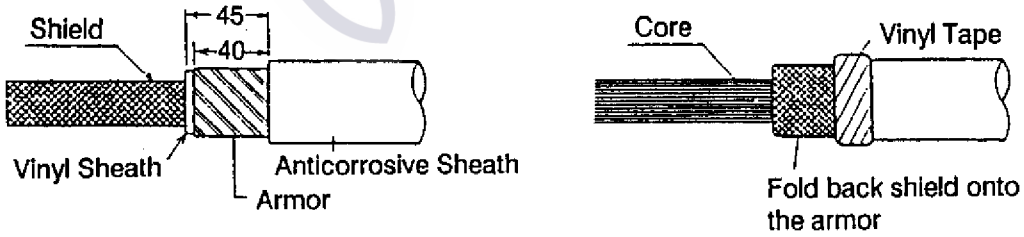

www.reelschematic.com

Connecting Contact

A special crimping tool is necessary for connection of wires to the contact of the connector. In addition, a pin extractor should be used to remove the contact pin from the connector housing.

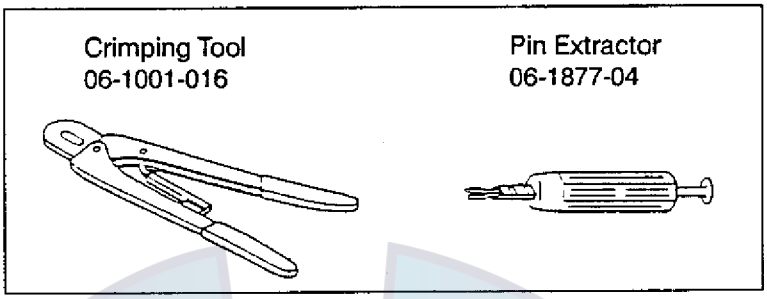

Refer to the installation manual of the CSH-5 for wire crimping procedure.

Note: Solder the grounding lead (supplied as installation material) to "BRN/RED4" wire connected to the display unit, instead of fitting a contact.

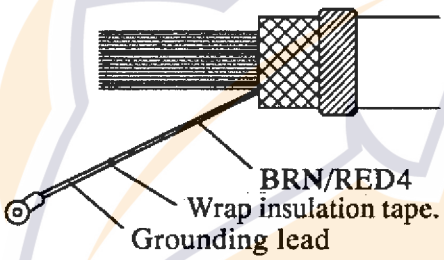

Inserting Contact Pin into Connector Housing

The wires fitted with contact pins should be inserted into the connector housing referring to the drawing below or interconnection diagram on page 8.

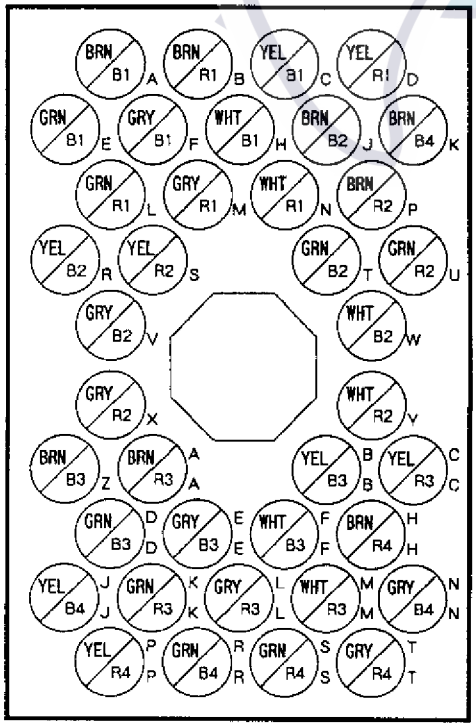

Note: 1. Wire discrimination

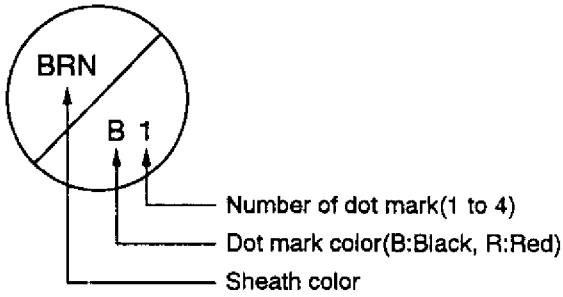

2. BRN and GRN show the following colors.
BRN•••Light brown
GRN•••Light green

3. "BRN/R4" wire is inserted to HH hole only on the display switch box side connectors.

www.reelschematic.com

Assembling Connector Housing

1. Fix the cover①, paying attention to the cable outgoing direction.

2. Dress the wires and fix covers ② and ③.

3. Use a fragment of cable sheath to secure the wires at the connector clamp.

4. Cut the unused wires to proper lengths and wrap their ends with vinyl tape.

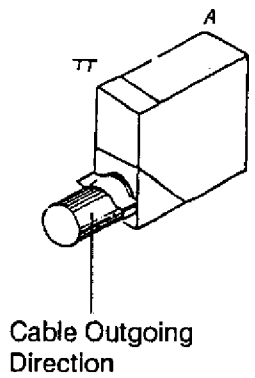

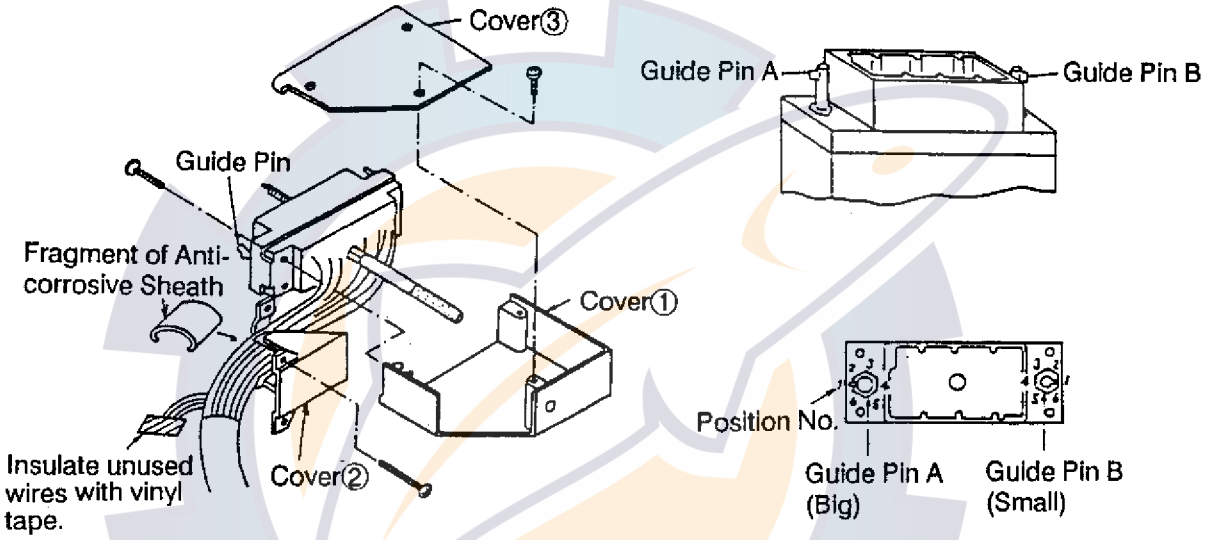

Clamping Cable

Secure the cable with cable clamp at the shield and armor portion.

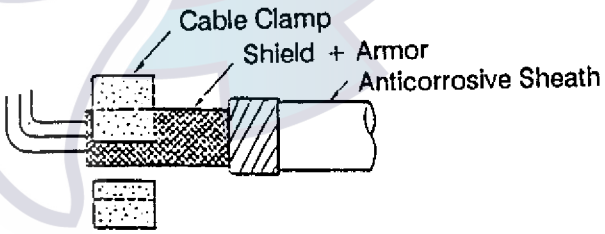

4. Connection of Grounding Wire

Connect the grounding wire of the interconnection cable between the Display Switch Box and display unit to the display unit chassis. Otherwise the "XDCR UNRETRACTED" warning is displayed on the screen even if the transducer raise/lower operation is normal.

www.reelschematic.com

5. After-installation Setting

Set the MODE switch on the Display Switch Box to "DUAL" or "SINGLE" according to the customer's preference.

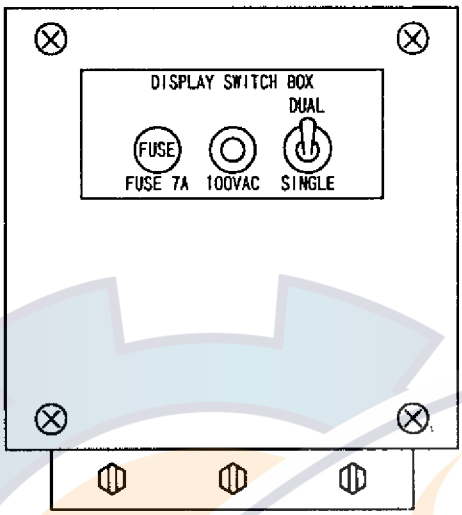

Setting	Operation
DUAL	Sonar can be turned on from either of the two display units. The one turned on first works as master display unit and the other as sub-display unit. The sonar operation is possible only on the master display unit. The sonar can be turned off on the master dislay unit only.
SINGLE	Of two display units, the one turned on first works. The other remains off.

www.reelschematic.com

FURUNO

7

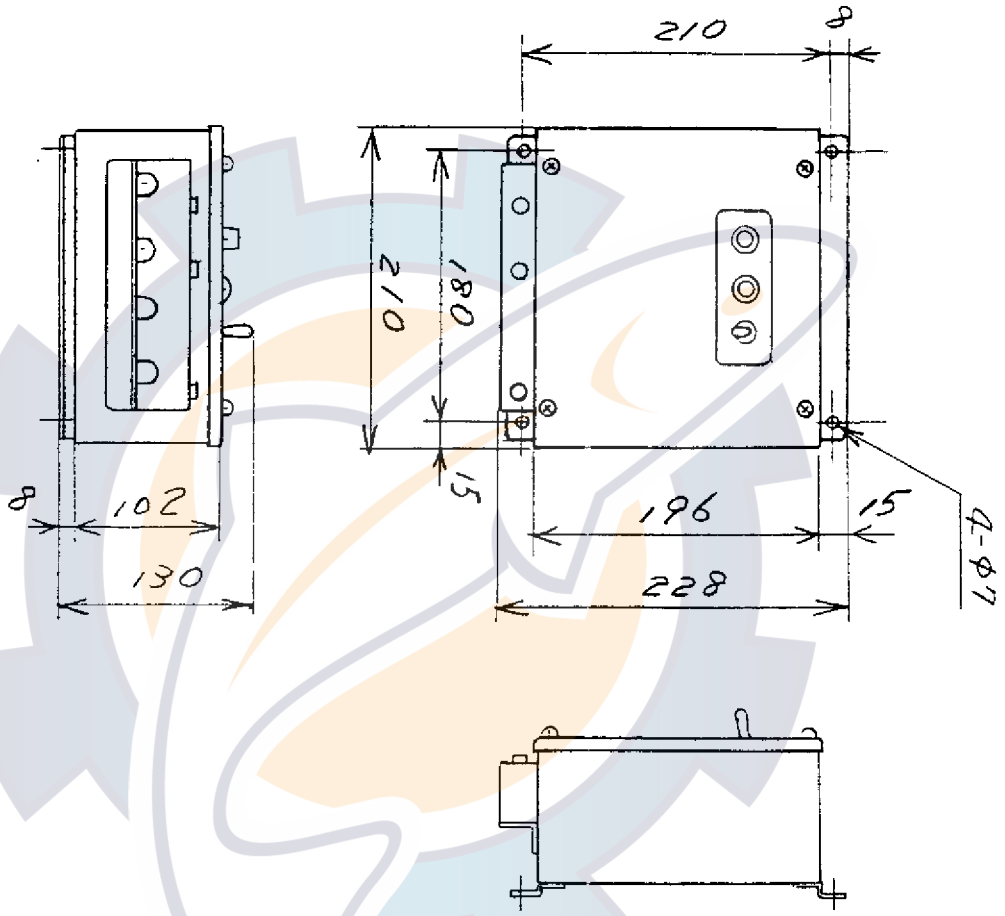

品番 ITEM	品名 NAME	材質 MATERIAL	数量 Q'TY	図番 DWG. NO.	摘要 REMARKS

承認 APPROVED	Nov.10.'92 M.IKEDA	三角法 THIRD ANGLE		名称 TITLE	CSH-5070 指示器切換器外寸図 DISPLAY SWITCH BOX
検図 CHECKED	Nov.10.'92 M.USUDA	尺度 SCALE	1/5		
製図 DRAWN	Nov.10.'92 OKAMOTO	重量 WEIGHT	2 kg	図番 DWG.NO	C1004 – G01 – A

FURUNO ELECTRIC CO., LTD.

FURUNO

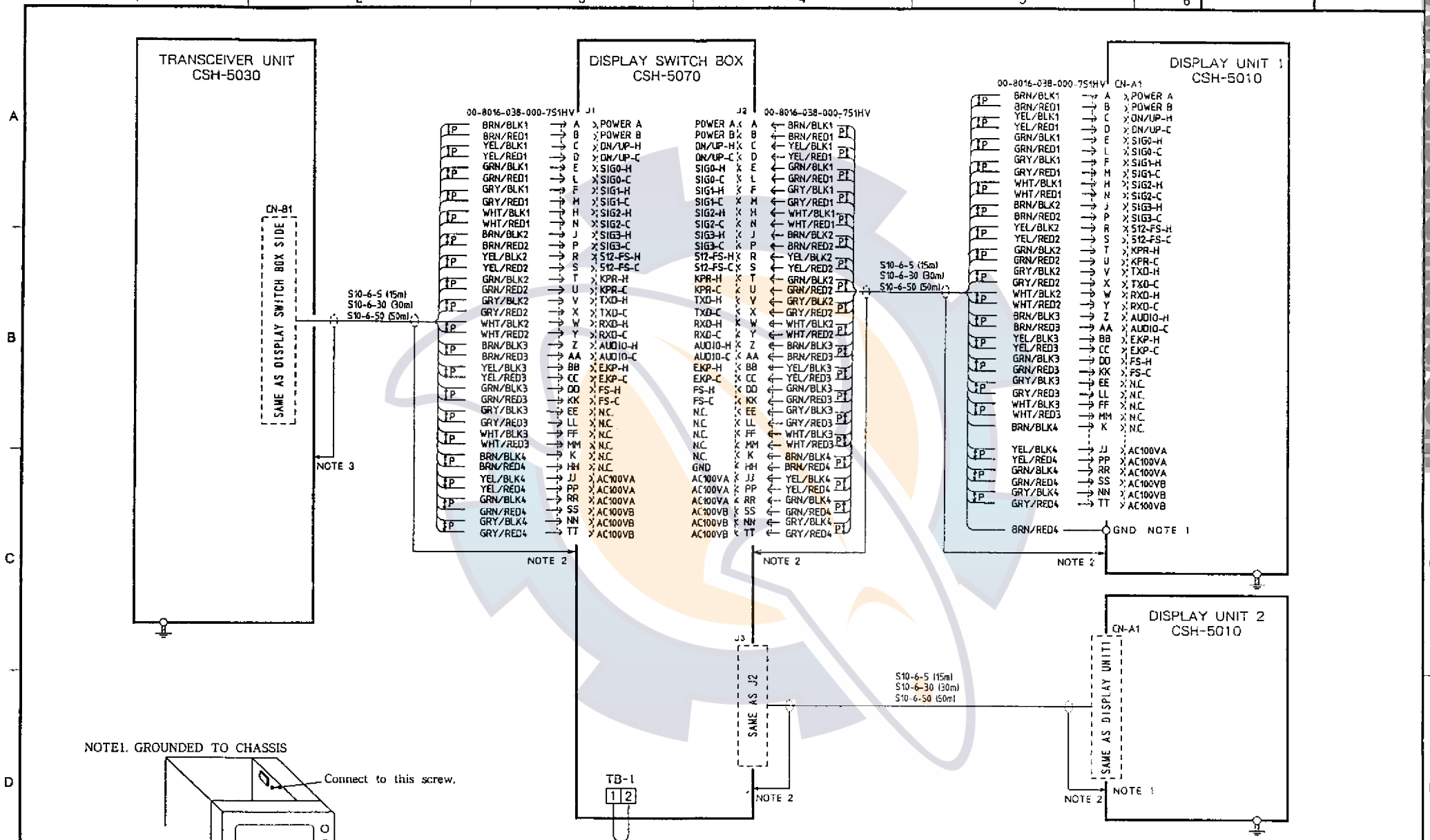

NOTE1. GROUNDED TO CHASSIS

Connect to this screw.

2. GROUNDED TO CABLE GLAND.
3. GROUNDED TO TRANSCEIVER CHASSIS.

承認 APPROVED	Nov.10.'92 M.IKEDA	名称 TITLE	CSH-5070 INTERCONNECTION DIAGRAM
検図 CHECKED	Nov.10.'92 M.IKEDA		
製図 DRAWN	Nov.10.'92 OKAMOTO	図番 DWG.NO	E1004 – C01 – A

FURUNO ELECTRIC CO., LTD.

www.reelschematic.com