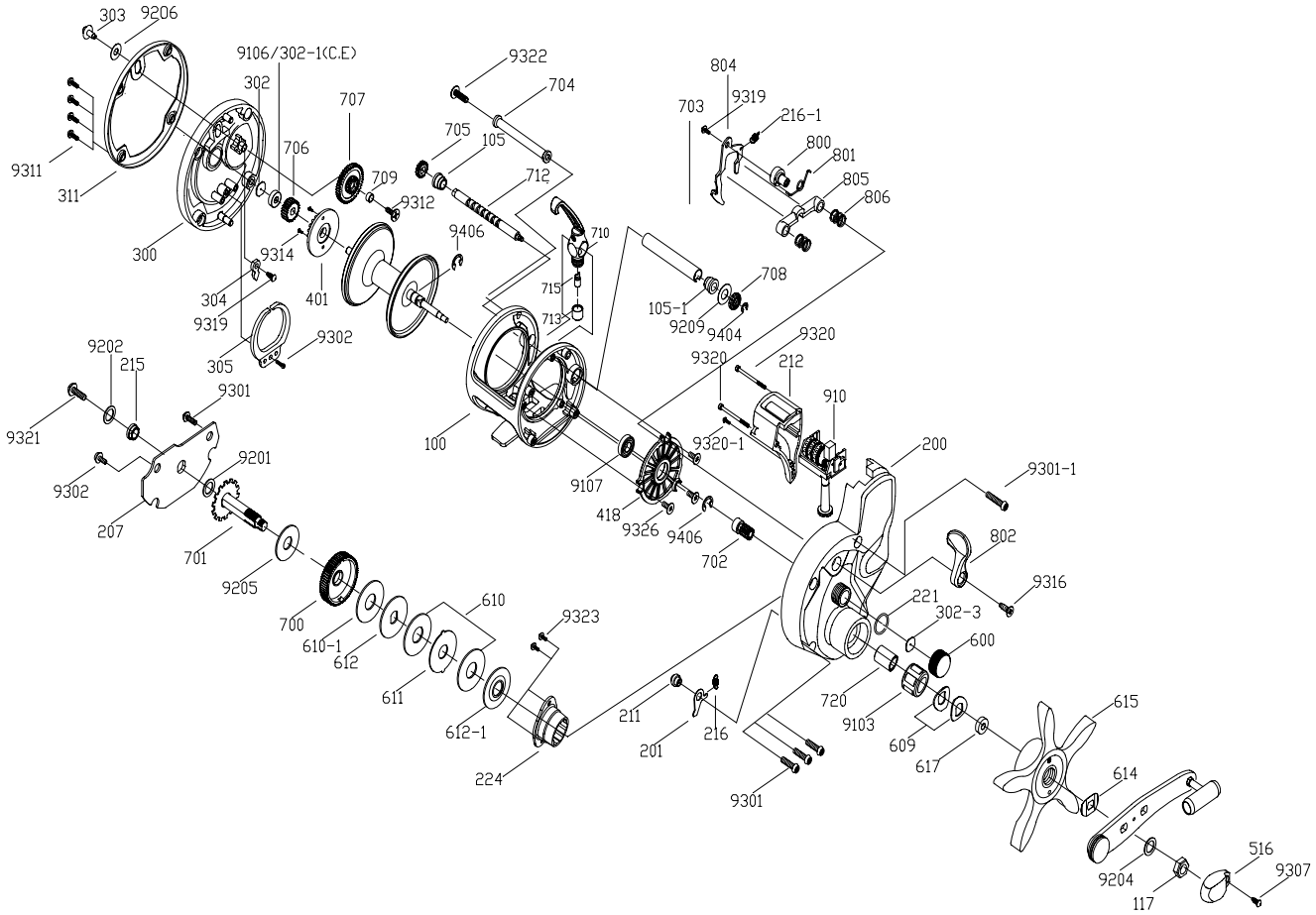

CN - 15D Spare Parts

key no	new part no	old part no	parts name	lot no	key no	new part no	old part no	parts name	lot no
100	11001036	1110004701006	MAIN BODY ASSY.		707	17070009	11707008-11	TRANSMISSION GEAR	
105	11050006	11105003-01	WORM SHAFT BUSHING		708	17080003	11708003-11	TRANSMISSION GEAR	
105-1	11050007	11105004-01	WORM SHAFT BUSHING		709	17090004	11709002-03	TRANSMISSION GEAR BUSHING	
117	11170012	11117007-03001	NUT		710	17100044	1171001206917	LINE GUIDE ASSY.	
200	12000916	11200055-01A06C	MAIN SIDE PLATE		712	17120029	11712021-03001	WORM SHAFT	
201	12010011	11201008-06	ANTI-RE PAWL		713	17130001	11713001-03907	LINE GUIDE PAWL CAP	
207	12070052	11207017-03001	HOLDED PLATE		715	17150004	11715003-06001	LINE GUIDE PAWL	
211	12110009	11211003-03001	ANTI-RE PAWL PIN		720	17200002	11720002-06001	DRIVE GEAR SHAFT BUSHING	
212	12120019	112120010183	COUNTER COVER ASSY		800	18000005	11800002-02002	CLUTCH CAM	3027
215	12150015	11215011-03001	HOLD PLATE BUSHING		800	18000008	11800002-12002	CLUTCH CAM	
216	12160001	11216001-06	ANTI-RE PAWL SPRING		801	18010001	11801001-06	CLUTCH SPRING	
216-1	12160003	11216002-06	ANTI-RE PAWL SPRING		802	18020047	11802005-0183	CLUTCH BAR	
221	12210001	11221001-07	"O"RING		804	18040005	11804005-06	CLUTCH CAM SLIDER	
224	12240017	0	ONE WAY BEARING CAP		805	18050002	11805002-01	PINION GEAR YOKE	
300	13000446	11300030-01006	SIDE PLATE		806	18060001	11806001-06	YOKE SPRING	
302	13020014	11302002-06001	WASHER		910	19100004	11910001-01003	DEPTH COUNTER	
302-3	13020017	11302006-03	WASHER		9103	0910163	01101612-62	ONE WAY BEARING	3102
303	13030045	11303010-03907	CLICK BUTTON		9103	0910170	01101612-63	ONE WAY BEARING	
304	13040001	11304003-06	CLICK PAWL		9106	0910227	01041104-61	BALL BEARING	
305	13050007	11305001-01003	CLICK PAWL SPRING		9107	0910248	01061335-61	BALL BEARING	
311	13110028	11311007-06001	SIDE PLATE COVERS		9201	0920283	025.1x8x0.5-6	WASHER	
400	14000482	1140004204005A	SPOOL ASSY.		9201-1	0920154	028.1x12x0.5-6	WASHER	
401	14010026	1140101101	CLICK GEAR		9202	0920114	025.1x9.5x0.2-6	WASHER	
418	14180001	11418001-01001	SPOOL BEARING FIXED PLATE		9205	0920328	028.1x22x1-1	WASHER	
500	15000184	11500013061	HANDLE ASSY.		9206	0920370	024.05x10x0.3-8	WASHER	
516	15160001	115160001-01	HANDLE NUT RETAINER	3052	9207	0920066	022x4.9x0.2-3	WASHER	
516	15160002	11516001-011	HANDLE NUT RETAINER		9209	0920282	025.1x8x0.2-6	WASHER	
600	16000038	11600014-03001	CAST CONTROL CAP		9301	0930298	03422.6x13-61	SCREW	
609	46090002	14609001-06001	WASHER		9301-1	0930694	03412.6x21-61	SCREW	
610	16100010	11610004-006	DRAG WASHER		9302	0930219	03327.52.6x6-61	SCREW	
610-1	16100032	11610013-000	DRAG WASHER		9307	0930226	03412.6x4-61	SCREW	
611	16110005	11611005-06	EARED WASHER		9311	0930549	03222.6x12-61	SCREW	
612	16120027	11612007-06001	KEY WASHER		9312	0930210	03325.2x2x4.561	SCREW	
612-1	46120002	14612001-06001	KEY WASHER		9314	0930501	03212x5-617	SCREW	
614	16140001	11614001-06	SPRING WASHER		9316	0930732	03414x5-617	SCREW	
615	46150011	14615002-04002C	STAR DRAG		9319	0930196	03312x5-61	SCREW	
617	16170009	11617007-03	DRIVE GEAR SHAFT BUSHING		9320	0930426	03122x26-61	SCREW	
700	17000210	1170000803006	DRIVE GEAR		9320-1	0930062	03122x8-62	SCREW	
701	17010122	1170102813001A	DRIVE GEAR SHAFT		9321	0930202	03319.4x3x7-61	SCREW	
702	17020310	1170203603002	PINION GEAR		9322	0930244	03412.6x9-61	SCREW	
703	17030011	11703011-03001	WORM SHAFT GUARD		9323	0930171	03222.6x4.5-61	SCREW	
704	17040026	11704017-03001	LINE GUIDE SUPPORT BAR		9326	0930673	03327x2.6x4-61	SCREW	
705	17050011	11705006-06	TRANSMISSION GEAR		9404-1	19000002	11900002-06	E RETAINER	
706	17060003	11706002-06	TRANSMISSION GEAR		9406	29000006	12900006-06001	C RETAINER	