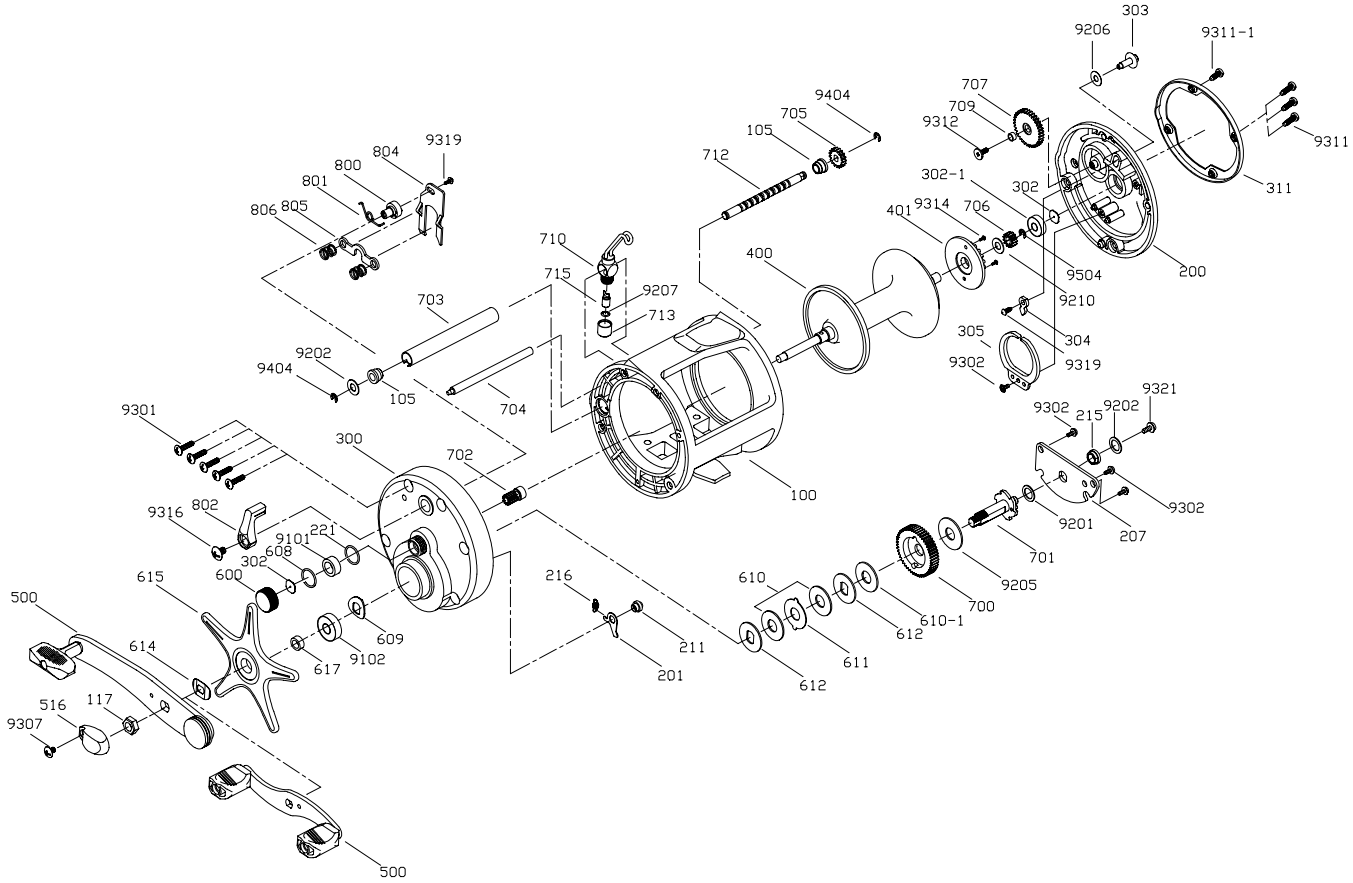

SD - 30LX Spare Parts

key no	new part no	old part no	parts name	lot no
100	11001211	1110008901001	MAIN BODY ASSY.	
105	11050006	11105003-01	WORM SHAFT BUSHING	
117	11170013	11117005-03002	NUT	
200	12000549	11200039-01	HANDLE SIDE PLATE	
201	12010001	11201001-06	ANTI-REVERSE PAWL	
207	12070050	11207015-03001	HOLDED PLATE	
211	12110008	11211002-03001	ANTI-RE PAWL PIN	
215	12150015	11215011-03001	HOLD PLATE BUSHING	
216	12160001	11216001-06	ANTI-RE PAWL SPRING	
221	12210001	11221001-07	"O"RING	
300	13000510	11300043-01001C	SIDE PLATE	
302	13020014	11302002-06001	WASHER	
303	13030040	11303004-03914	CLICK BUTTON	
304	13040001	11304003-06	CLICK PAWL	
305	13050007	11305001-01003	CLICK PAWL SPRING	
311	13110027	11311006-06002	SIDE PLATE COVERS	
400	14000388	1140003304007B	SPOOL ASSY.	
401	14010026	1140101101	CLICK GEAR	
500	15000157	1150001004905	HANDLE ASSY.	
516	15160001	115160001-01	HANDLE NUT RETAINER	3052
516	15160002	11516001-011	HANDLE NUT RETAINER	
600	16000052	11600015-03003	CAST CONTROL CAP	
608	16080006	11608004-06	DRAG WASHER RETAINER	
609	16090002	11609003-05907	DRAG SPRING WASHER	3008
609	16090003	11609003-06001	DRAG SPRING WASHER	
610	16100010	11610004-006	DRAG WASHER	
610-1	16100032	11610013-000	DRAG WASHER	
611	16110005	11611005-06	EARED WASHER	
612	16120027	11612007-06001	KEY WASHER	
614	16140001	11614001-06	SPRING WASHER	
615	16150022	11615005-01001A	STAR DARG KNOB	
617	16170002	11617005-03	DRIVE GEAR SHAFT BUSHING	
700	17000201	1170000603003	DRIVE GEAR ASSY.	
701	17010087	1170102013001	DRIVE GEAR SHAFT	
702	17020243	1170200803002	PINION GEAR	
703	17030006	11703007-03907	WORM SHAFT GUARD	
704	17040008	11704005-03907	WORM GUIDE SUPPORT BAR	
705	17050013	11705008-06	TRANSMISSION GEAR	

key no	new part no	old part no	parts name	lot no
706	17060006	11706003-06	TRANSMISSION GEAR	
707	17070004	11707003-01	TRANSMISSION GEAR	
709	17090004	11709002-03	TRANSMISSION GEAR BUSHING	
710	17100046	1171001306917	LINE GUIDE ASSY.	
712	17120019	11712010-03907	WORM SHAFT	
713	17130001	11713001-03907	LINE GUIDE PAWL CAP	
715	17150003	11715003-06	LINE GUIDE PAWL	2945
715	17150004	11715003-06001	LINE GUIDE PAWL	
800	18000009	11800003-02002	CLUTCH CAM	3031
800	18000011	11800003-12002	CLUTCH CAM	
801	18010003	11801003-06	CLUTCH SPRING	
802	18020001	11802003-01	CLUTCH BAR	
804	18040006	11804006-06	CLUTCH CAM SLIDER	
805	18050001	11805001-06	PINION GEAR YOKE	
806	18060001	11806001-06	YOKE SPRING	
9101	0910321	01030625-61	BALL BEARING	
9102	0910099	01081605-61	BALL BEARING	
9106	0910227	01041104-61	BALL BEARING	
9201	0920283	025.1x8x0.5-6	WASHER	
9202	0920114	025.1x9.5x0.2-6	WASHER	
9205	0920327	028.1x18x1-1	WASHER	3036
9205	0920339	028x15x1-1	WASHER	
9206	0920085	024.05x10x0.2-8	WASHER	
9207	0920066	022x4.9x0.2-3	WASHER	
9209	0920282	025.1x8x0.2-6	WASHER	
9210	0920108	025.1x10.5x.5-6	WASHER	
9301	0930801	03423x12.5-64	SCREW	
9302	0930219	03327.52.6x6-61	SCREW	
9307	0930696	03412.6x4-64	SCREW	
9311	0930795	03423.0x10-64	SCREW	
9312	0930651	03327.52.67.561	SCREW	
9314	0930501	03212x5-617	SCREW	
9316	0930734	03414x5-647	SCREW	
9319	0930196	03312x5-61	SCREW	
9321	0930202	03319.4x3x7-61	SCREW	
9404	29000001	12900001-06	E RETAINER	
9504	19010001	11901001-06	C RETAINER	