QUANTUM®

Code Red

CDR1061CX

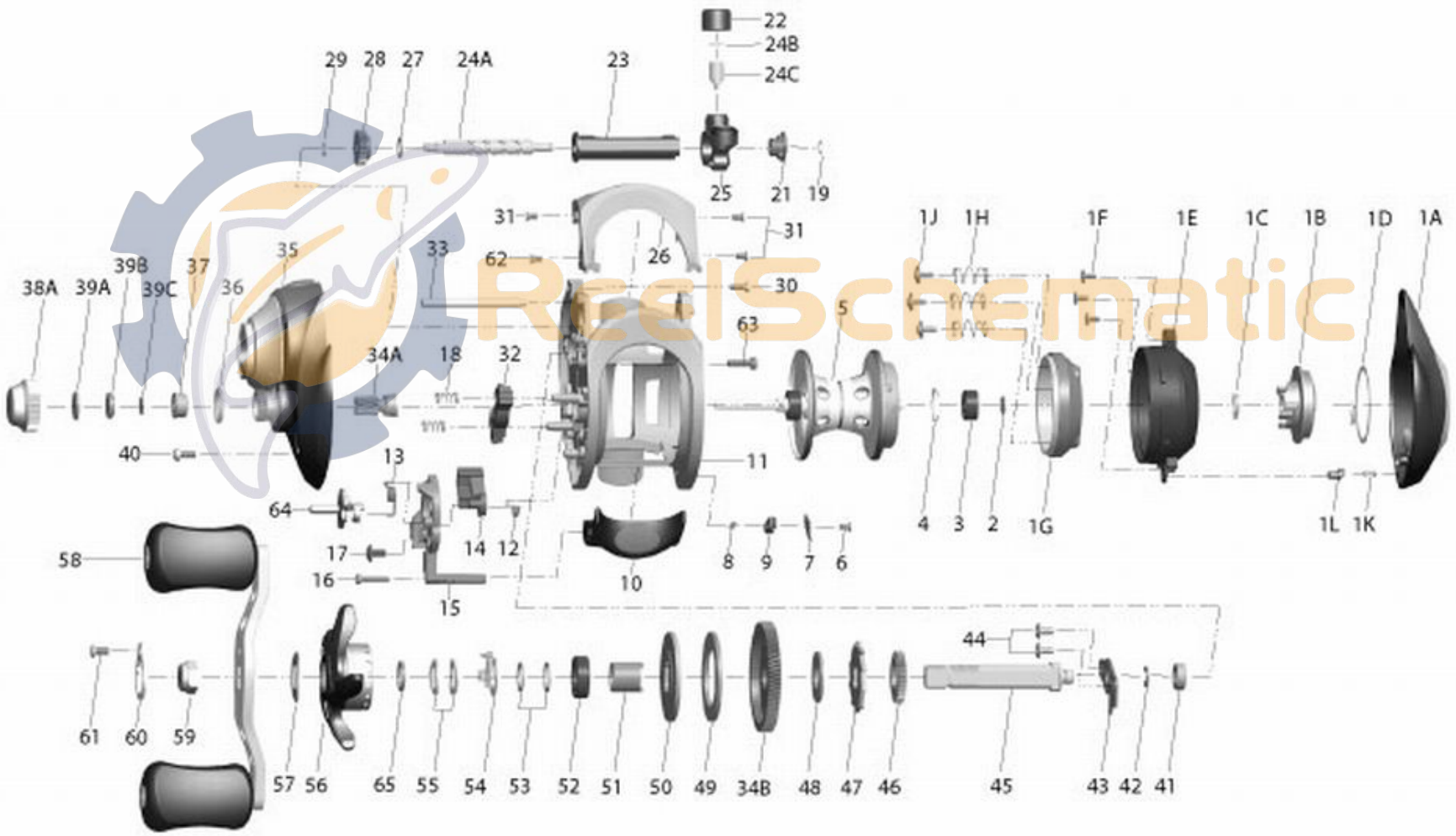

ReelSchematic

QUANTUM®

Code Red

CDR1061CX

Quantum Code CDR1061CX Bait Cast Reel Part List

Key #	Description	Part No.	Key #	Description	Part No.
1	Palm Side Cover Kit	LW4023-05	**29**	Worm Shaft E-Clip (Gear Side)	NX090-01
1A	Part Not Available	N/A	**30**	Gear Side Cover Screw "B"	LW123-01
1B	Part Not Available	N/A	**31**	Front Support Screw "A"	KW107-01
1C	Part Not Available	N/A	**32**	Pinion Yolk	LW025-01
1D	Part Not Available	N/A	**33**	Pillar	KW061-01
1E	Part Not Available	N/A	**34**	Gear Kit	LW4011-02
1F	Part Not Available	N/A	**34A**	Part Not Available	N/A
1G	Part Not Available	N/A	**34B**	Part Not Available	N/A
1H	Part Not Available	N/A	35	Gear Side Cover Assembly	LW324-06
1J	Part Not Available	N/A	36	Spool Tension Knob O-Ring	QW101-01
1K	Part Not Available	N/A	**37**	Spool Tension Knob Bearing	SW117-01
1L	Part Not Available	N/A	**38**	Spool Tension Knob Kit	KW4033-01
2	Part Not Available	N/A	**38A**	Part Not Available	N/A
3	Part Not Available	N/A	**39**	Part Not Available	N/A
4	Part Not Available	N/A	39	Spool Tension Washer Kit	QW4032-01
2	Spool Shaft Washer (Palm Side)	QW032-04	39A	Part Not Available	N/A
3	Spool Shaft Ball Bearing (Palm Side)	QV017-01	**39B**	Part Not Available	N/A
4	Bearing Clip Ring	HV080-01	39C	Part Not Available	N/A
5	Spool Assembly	LW321-04	40	Gear Side Cover Screw "A"	BV123-01
6	Locking Lever Retainer Screw	KW107-01	41	Crank Shaft Bearing (Frame Side)	SW017-01
7	Locking Lever Retainer	LW056-01	**42**	Crank Shaft E-Clip	QW120-01
8	Locking Lever Spring	KW096-01	**43**	Crank Shaft Retainer Plate	LW002-01
9	Locking Lever	LW119-01	**44**	Crank Shaft Retainer Plate Screw	QW125-02
10	Thumb Bar Assembly	LW309-01	**45**	Crank Shaft	LW008-01
11	Part Not Available	N/A	**46**	Worm Shaft Drive Gear	ZW112-01
12	Kick Lever Spring	LW097-01	**47**	Trip Ratchet	KW083-01
13	Release Slider Spring	LW104-01	**48**	Trip Ratchet Washer	QW111-01
14	Kick Lever	LW077-01	**49**	Drag Washer	UX059-01
15	Release Slider	LW039-01	**50**	Drag Key Washer	KW045-01
16	Thumb Bar Screw	ZW053-01	**51**	One Way Clutch Sleeve	KW052-01
17	Release Slider Screw	KW125-01	**52**	Crank Shaft Bearing (Handle Side)	TW058-02
18	Pinion Yolk Spring	KW040-01	**53**	Star Drag Washer	KW032-01
19	Worm Shaft E-Clip (Palm Side)	NX090-01	**54**	Star Drag Clicker Spring Assembly	ZW4114-01
20	Worm Shaft Washer (Palm Side)	KW038-01	**55**	Star Drag Spring Washer	JX046-01
21	Worm Shaft Bushing	KW067-01	**56**	Star Drag Assembly	LW355-01
22	Line Guide Pawl Screw	KW007-01	**57**	Handle Spring Washer	QW054-01
23	Worm Shaft Guide	KW016-01	**58**	Handle Assembly	KW318-02
24	Worm Shaft Kit	KW4072-01	**59**	Handle Nut	KW003-01
24A	Part Not Available	N/A	**60**	Handle Nut Retainer	KW034-02
24B	Part Not Available	N/A	**61**	Handle Nut Retainer Screw	KW057-01
24C	Part Not Available	N/A	**63**	Gear Side Cover Screw "C"	KW123-01
25	Line Guide Carrier Assembly	KW347-02	**64**	Flippin' Lever	LW087-01
26	Front Support	LW099-01	**65**	Star Drag Washer "B"	KW032-02
27	Worm Shaft Washer (Gear Side)	KW035-01			
28	Worm Shaft Pinion Gear	HV085-01			

ReelSchematic