QUANTUM
Energy AC15PTiA

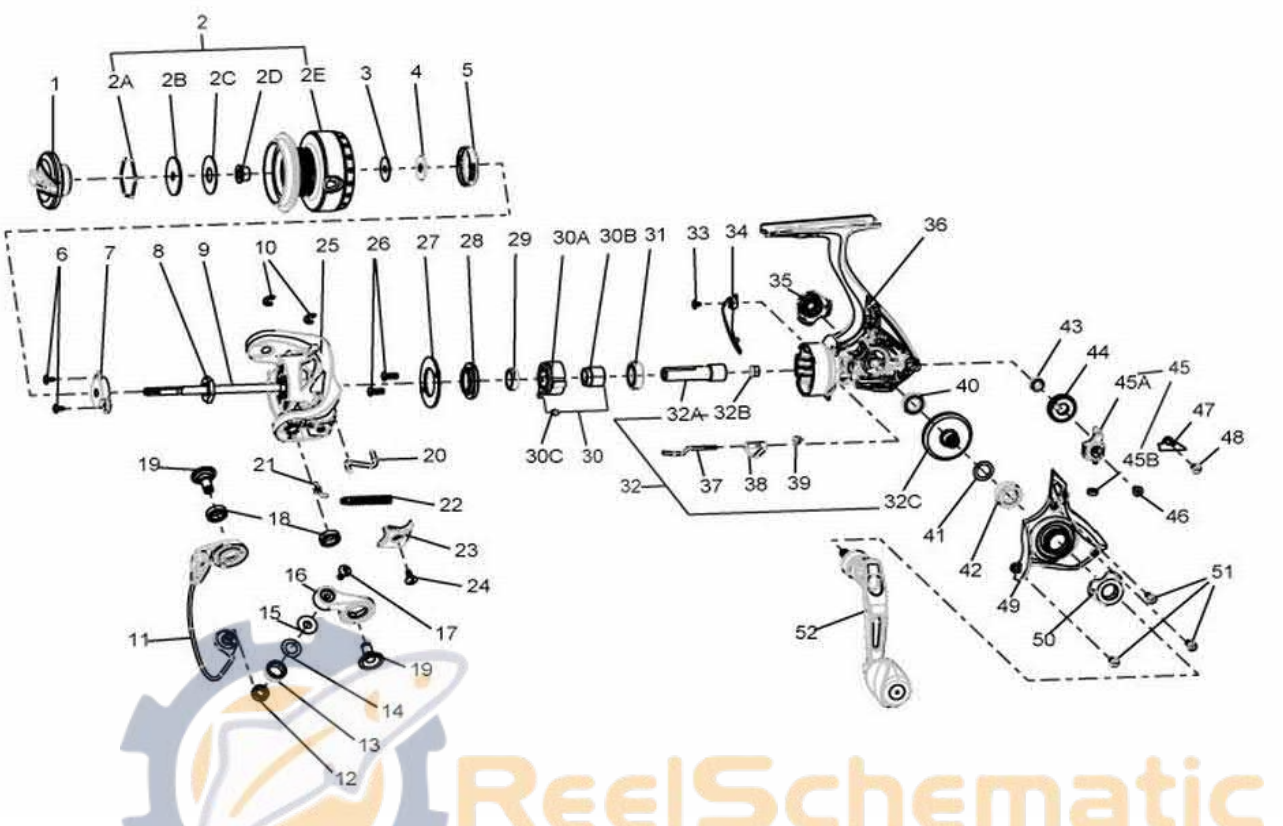

ReelSchematic

Quantum AC15PTiA Spinning Reel Part List							
Key #	Description	Qty	Part No.	Key #	Description	Qty	Part No.
1	Drag Knob Assembly	1	VAB332-01	29	Ball Bearing	1	CH027-01
2	Spool Kit	1	VAB421-03	30	One Way Clutch Kit	1	VAB463-01
	2A - Retaining Ring	1	VAB038-01		32A - One Way Clutch	1	VAB063-01
	2B - Drag Washer "D"	1	VAB080-01		32B - Clutch Sleeve	1	VAB139-01
	2C - Drag Washer "B"	1	SQ033-01		32C - Coil Spring	1	VAB216-01
	2D - Bushing	1	PG141-01	31	Ball Bearing - Pinion	1	BH028-01
	2E - Spool Assembly	1	VAB321-03	32	Gear Kit	1	VAB412-02
3	Spool Adjust Washer	1	PG030-01		32A - Pinion	1	VAB011-02
4	Washer - Spool	1	PG080-01		32B - Bushing	1	RQ141-03
5	Spool Click unit	1	RG4114-01		32C - Drive Gear	1	PT312-01
6	Screw	2	RQ094-01	33	Screw - Trip Bumper	1	WAB077-01
7	Bushing - Main Shaft	1	TK214-01	34	Trip Bumper	1	MG243-01
8	Nut - Rotor	1	SH006-01	35	Dust Cap	1	DAB054-02
9	Main Shaft	1	VAB015-02	36	Body Assembly	1	VAB301-03
10	E-Clip	2	GH034-01	37	Cam - A/R Lever	1	VAB090-01
11	Bail Assembly	1	VAB347-03	38	A/R Lever	1	VAB059-01
12	Ball Bearing - Line Roller	1	GH202-01	39	Leaf Spring - A/R Lever	1	VAB089-01
13	Line Roller	1	PQ004-03	40	Ball Bearing - Body	1	CH027-01
14	Washer - Line Roller	1	PQ102-51	41	Washer - Drive Gear	1	GU105-08
15	Collar - Line Roller	1	PQ102-01	42	Ball Bearing - Side Cover	1	CH028-01
16	Arm Lever	1	VAB007-03	43	Ball Bearing - O/S Gear	1	CT157-01
17	Screw - Line Roller	1	AQ108-02	44	O/S Gear	1	PQ053-01
18	Ball Bearing - A/Lever & B/Holder	2	BAA158-01	45	O/S Slider Kit	1	MG425-01
19	Pin	2	VAB042-03		45A - O/S Slider Assembly	1	MG325-01
20	Kick Lever	1	VAB162-01		45B - Bushing	1	PG227-01
21	Cam	1	VAB163-01	46	Screw - Main Shaft	1	RQ100-01
22	Coil Spring	1	VAB148-01	47	Retainer - O/S Slider	1	VAB078-01
23	Rotor Cover	1	VAB087-03	48	Screw - Retainer	1	TK057-01
24	Screw - Rotor Cover	1	GU077-02	49	Side Cover Assembly	1	VAB323-03
25	Rotor	1	VAB009-03	50	Side Cover Cosmetic Cap	1	DAB142-03
26	Screw	2	WAB142-01	51	Side Cover Screw	3	RQ057-02
27	Retainer - Clutch	1	VAB060-01	52	Handle Assembly	1	VAB318-03
28	Ball Bearing Retainer	1	DAB078-01				