QUANTUM®

BR70F

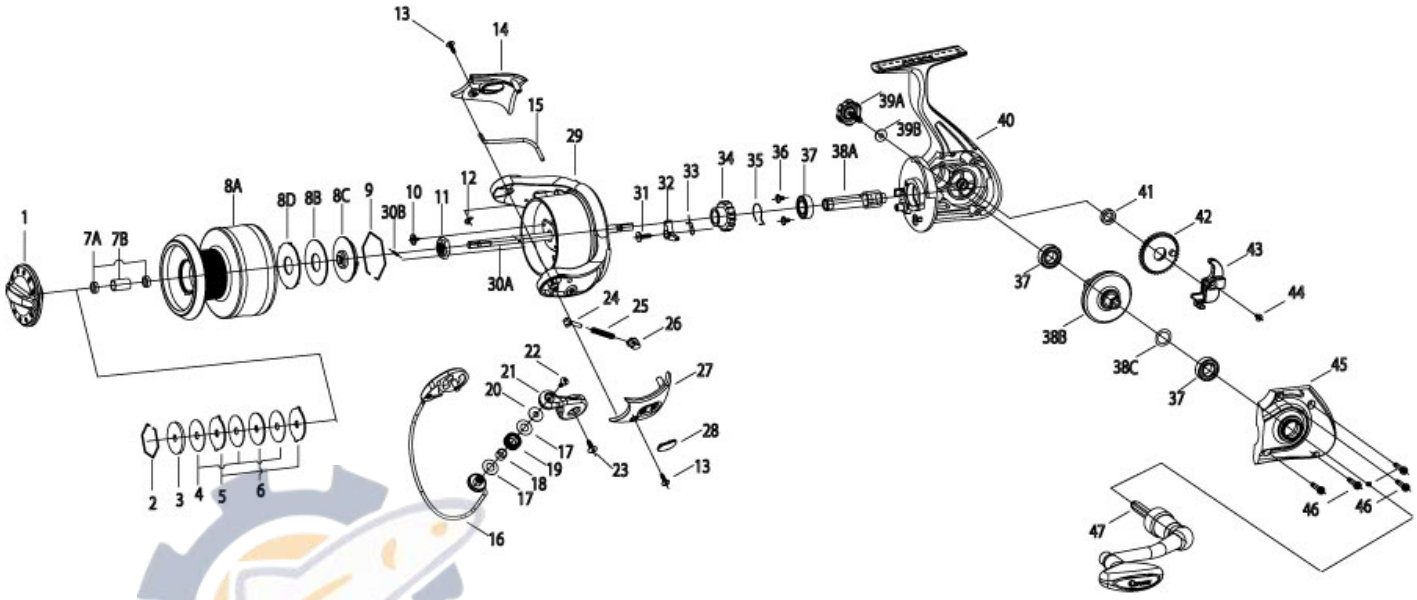

ReelSchematic

Quantum BLUE RUNNER BR70F Part List

Key #	Description	BR70F	Key #	Description	BR70F
1	DRAG KNOB ASSEMBLY	N/A	27	ARM LEVER COVER	JS087-01
2	SPOOL RETAINER - TOP	BT038-02	28	A/L SIDE COSMETIC COVER	GS135-01
3	DRAG WASHER "D"	JS080-01	29	ROTOR	JS009-01
4	DRAG WASHER "B"	BT033-01	30	MAIN SHAFT KIT	JS4015-01
5	DRAG WASHER "A"	BT081-01		30A - MAIN SHAFT	QTY - 1
6	DRAG WASHER "D"	BT080-01		30B - MAIN SHAFT PIN	QTY - 1
7	SPOOL BEARING KIT	BT4160-01	31	SCREW A/R STOPPER	
	7A - SPOOL BUSHING	QTY - 2	32	A. R. STOPPER	GS063-01
	7B - SPOOL SPACER	QTY - 1	33	A. R. CLAW SPRING	GS061-01
8	SPOOL ASSEMBLY	JS321-01	34	RATCHET GEAR	JS060-01
9	SPOOL RETAINER - BOTTOM	BT038-01	35	SLIDE SPRING	JS086-01
10	ROTOR NUT LOCK SCREW	JS094-01	36	SCREW, BEARING RETAINER	
11	ROTOR NUT	BT006-01	37	PINION/BODY BALL BEARING	BT157-01
12	E-CLIP - BAIL ASSEMBLY	GH034-01	38	GEAR KIT	GS4011-01
13	A/L/BAIL HOLDER COVER SCREW	GU077-02A		38A - PINION GEAR	QTY - 1
14	BAIL HOLDER COVER	JS024-01		38B - DRIVE GER	QTY - 1
15	KICK LEVER	JS019-01		38C GEAR ADJUST. WASHER	QTY - 1
16	BAIL ASSEMBLY	JS347-01	39	HANDLE SCREW CAP KIT	GS4073-01
17	LINE ROLLER WASHER	JS102-01		39A - HANDLE CAP SCREW	QTY - 1
18	LINE ROLLER BUSHING	JS202-01		39B - H/CAP SCREW WASHER	QTY - 1
19	LINE ROLLER	CH004-02	40	BODY ASSEMBLY	JS301-02
20	LINE ROLLER COLLAR	CH102-01	41	O/S GEAR BUSHING OR BEARING	BT158-01
21	ARM LEVER ASSY.	JS307-01	42	O/S GEAR	GS053-01
22	SCREW - LINE SLIDER	AQ108-01	43	O/S SLIDER	GS025-01
23	SCREW - ARM LEVER	GS044-01	44	MAIN SHAFT SCREW	RQ100-01
24	PIN	GS031-01	45	BODY COVER	JS023-02
25	SPRING	GS022-01	46	BODY COVER SCREW	AT057-01
26	PIN HOLDER	GS020-01	47	HANDLE ASSY	GS318-01