www.reelschematic.com

QUANTUM®

1421MGC

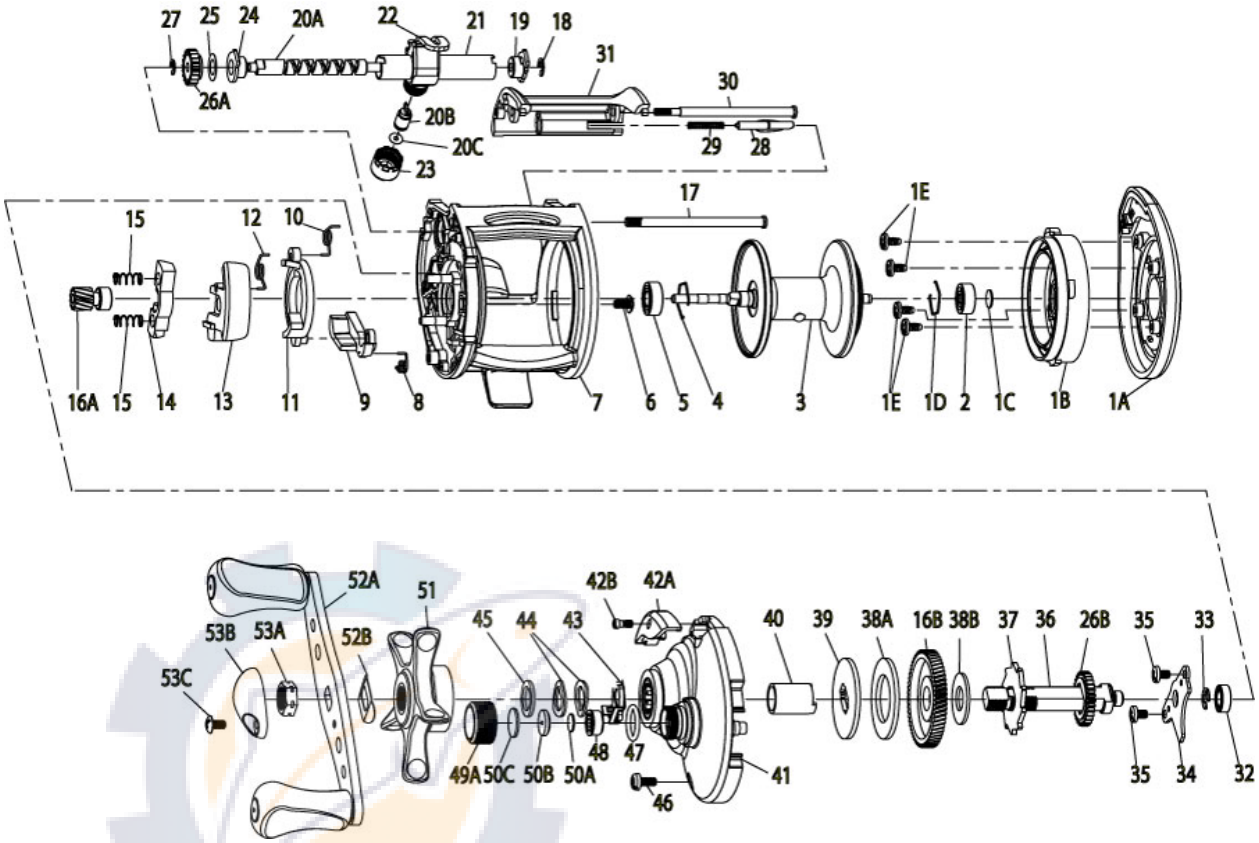

Quantum Classic Right & Left Hand 1420MGC/1421MGC Bait Cast Reel Part List

Key #	Description	Part No. 1420MGC	Part No. 1421MGC	Key #	Description	Part No. 1420MGC	Part No. 1421MGC
1	Palm Side Cover Kit include 1A - Palm Side Covoer Assembly 1B - Spool Cover Assembly 1C - Spool Shaft Washer 1D - Clip Ring 1E - Spool Cover Screw 2 - Spool Shaft Bearing (Palm)	GX4023-01	MX4023-01	29	Palm Side Cover Locking Spring	ZW096-01	ZW096-01
				30	Stablizer Bar - "A"	GX061-01	GX061-01
				31	Front Support	GX099-01	MX099-01
				32	Crank Shaft Bearing - Lower	SW017-01	SW017-01
				33	E-Clip	QW120-01	QW120-01
				34	Crank Shaft Retainer	GX002-01	GX002-01
				35	Crank Sahft Retainer Screw	JX107-01	JX107-01
2	Palm Side Spool Shaft Bearing	QV017-01		36	Crank Shaft	GX008-01	GX008-02
3	Spool Assembly	GX321-01	GX321-02	37	Trip Ratchet	EX083-01	EX083-01
4	Clip Ring	EX080-01	EX080-01	38	Drag Disc Kit include 38A - Drag Disc 38B - Trip Ratchet Washer	HV4059-01	HV4059-01
5	Gear Side Spool Shaft Bearing	EX017-02	EX017-02				
6	Gear Side Cover Screw -A	QW123-01	QW123-01				
7	Frame	GX001-01	MX001-01	39	Drag Key Washer	GX045-01	GX045-01
8	Kick Lever Spring	GX097-01	MX097-01	40	One Way Bearing Sleeve	GX052-01	GX052-01
9	Kick Lever	GX077-01	MX077-01	41	Gear Side Cover Assembly	GX324-01	MX324-01
10	Release Slider Spring	GX104-01	MX104-01	42	Oil Port Cap Kit include 42A - Oil Port Cap 42B - Oil Port Cap Screw	GX4150-01	MX4150-01
11	Release Slider	GX039-01	MX039-01				
12	Push Button Spring	GX089-01	MX089-01				
13	Push Button	GX062-01	MX062-01	43	Drag Click Spring Assembly	GX4114	GX4114
14	Pinion Yoke	GX025-01	MX025-01	44	Spring "D" Washer	JX046-01	JX046-01
15	Yoke Spring	GX040-01	GX040-01	45	Star Drag Washer	ZW032-02	ZW032-02
16	Gear Kit include 16A - Pinion Gear Assembly 16B - Drive Gear	GX4011-01	GX4011-02	46	Gear Side Cover Screw - B	GX107-01	GX107-01
				47	Tension Knob O-Ring	QW101-01	QW101-01
				48	Tension Knob Bushing	QW117-01	QW117-01
17	Stablizer Bar - "B"	MX061-01	MX061-01	49	Tension Knob Kit include 49A - Spool Tension Knob 50 - Spool Tension Washer Kit	HV4033-01	HV4033-01
18	E-Clip	NX092-01	NX092-01				
19	Palm Side Worm Shaft Bushing	GX067-01	MX067-01				
20	Worm Shaft Kit Include 20A - Worm Shaft 20B - Line Guide Pawl 20C - Carrier Washer	GX4072-01	GX4072-01	50	Spool Tension Washer Kit Includ 50A - Spool Tension Washer 50B - Spool Tension Collar 50C - Spool Cushion Washer	QW4032-01	QW4032-01
21	Worm Shaft Guide	GX016-01	GX016-01	51	Star Dag	GX055-01	GX055-02
22	Line Guide Carrier	GX047-01	GX047-01	52	Handle Kit include 52A - Handle Assembly 52B - Handle Washer 53 - Handle Nut Kit	GX4018-01	GX4018-02
23	Line Guide Carrier Screw	ZW007-02	ZW007-02				
24	Gear Side Worm Shaft Bushing	HV068-01	HV068-01				
25	Worm Shaft Washer	EX035-01	EX035-01				
26	O/S Gear Kit include 26A - O/S Pinion Gear 26B - O/S Drive Gear	GX4085-01	GX4085-01	53	Handle Nut Kit include 53A - Handle Nut 53B - Handle Nut Cap 53C - Handle Nut Cap Screw	QW4003-01	QW4003-02
27	E-Clip	NX090-01	NX090-01				
28	Palm Side Cover Locking Lever	GX119-01	MX119-01				