BRUNSWICK CORPORATION
CONSUMER DIVISION
POST OFFICE BOX 270
TULSA, OKLAHOMA 74101

ZEBCO PARTS LIST AND ORDER BLANK

MODEL SRL30 SPINNING REEL

PLEASE ORDER BY PART NUMBER, NOT KEY NUMBER.

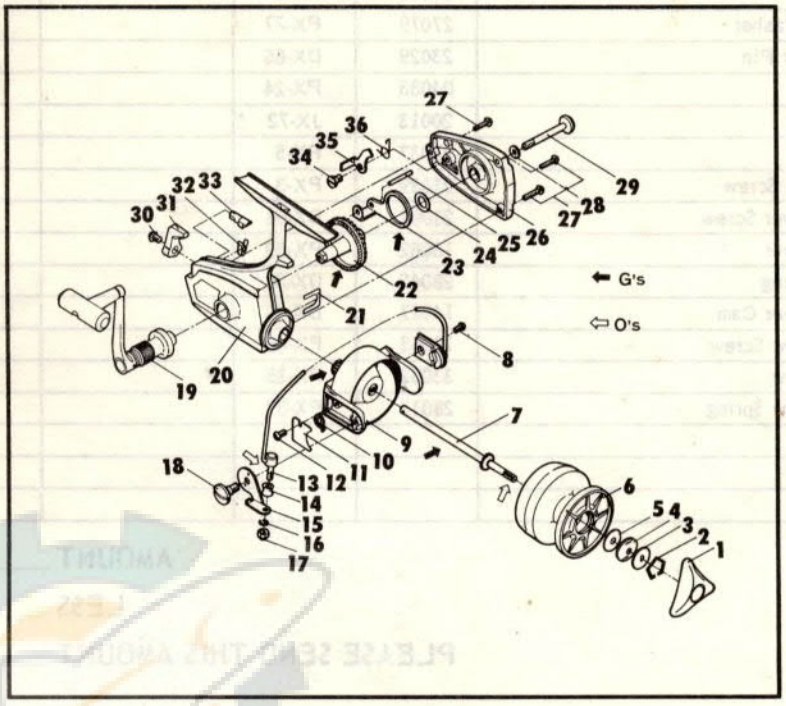

IF REQUIRED REPAIRS CANNOT BE MADE AT YOUR NEAREST FACTORY APPROVED SERVICE STATION, YOU MAY ORDER THE FOLLOWING REPLACEMENT PARTS DIRECT FROM THE FACTORY OR RETURN REEL TO FACTORY.

Your Order No. _____ Date _____

Charge To _____ Ship To _____

Address _____ Address _____

City & State _____ City & State _____

DEFECTIVE PARTS REPLACED AT FACTORY ONLY

KEY NO.	DESCRIPTION	PART NUMBER old	PART NUMBER new	QUANTITY	PRICE	EXTENSION
1	Drag Knob Assembly	0232019	PX-32		$ .75	
2	Stopper Spring	29023	PX-28		.10	
3	Drag Washer A	27046	PX-53		.10	
4	Spring Washer	27082	PX-30		.20	
5	Drag Washer B	27075	PX-54		.05	
6	Spool Assembly	0206031A	PX-21		1.15	
7	Main Shaft Assembly	0212084	PX-15		1.35	
8	Balanced Weight Screw	21003	BX-47		.10	
9	Rotor Assembly	0205022	PX-9-A		5.00	
10	Bail Arm Spring	28106	PX-49		.20	
11	Bail Arm Spring Cover	41009	PX-13		.20	
12	Bail Arm Spring Cover Screw	20023	PX-14		.05	
13	Bail Arm Assembly	0229034	PX-10-A		2.55	
14	Bail Arm Roller	25009	DX-4		.35	
15	Bail Arm Lever	15064	PX-43		.70	
16	Spring Washer	27021	CX-17		.10	
17	Bail Arm Nut	18005	BX-19		.15	
18	Bail Arm Cam Screw	21031	PX-16		.90	

Canadian Prices 25% Higher

KEY NO.	DESCRIPTION	PART NUMBER		QUANTITY	PRICE	EXTENSION
		old	new			
19	Handle Assembly	0207039	PX-18		$7.45	
20	Main Body	03031	PX-1-A		5.87	
21	Rotor Retainer	30007	DX-17		.10	
22	Main Gear	08030	PX-8		.80	
23	Oscillating Slider	11018	PX-64		.55	
24	Main Gear Adj. Washer	27079	PX-77		.10	
25	Oscillating Slider Pin	23029	DX-66		.10	
26	Side Plate	04033	PX-24		3.00	
27	Side Plate Screw	20013	JX-72		.10	
28	Nylon Washer	27037	PX-5		.10	
29	Handle Retaining Screw	21029	PX-3		.90	
30	Anti-Reverse Lever Screw	21001	BX-51		.10	
31	Anti-Reverse Lever	15062	PX-52		.20	
32	Anti-Reverse Spring	28042	DX-37		.10	
33	Anti-Reverse Lever Cam	14017	DX-36		.15	
34	Anti-Reverse Claw Screw	19063	PX-48		.20	
35	Anti-Reverse Claw	33032	PX-35		.40	
36	Anti-Reverse Claw Spring	28017	PX-37		.15	

AMOUNT