QUANTUM®

OP30D

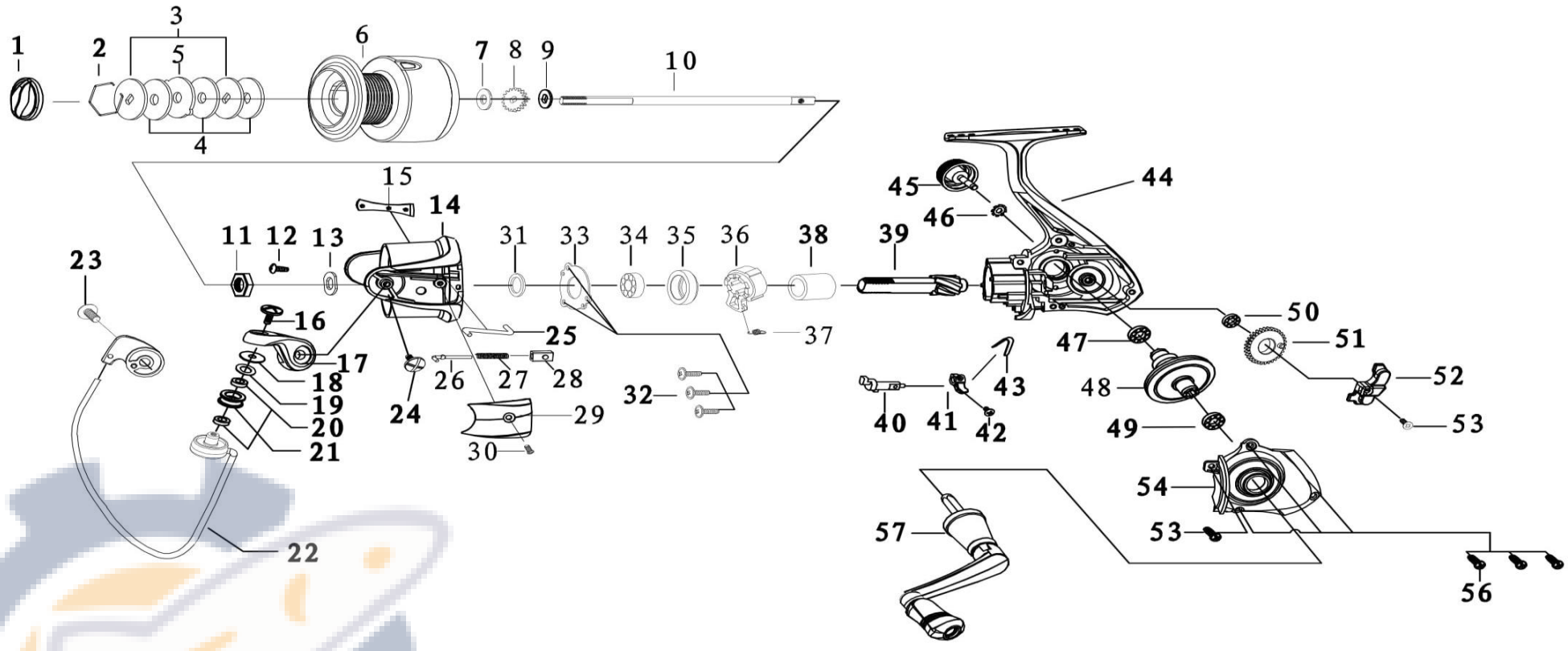

Quantum OPTIX OP30D Part List

Key No.	Description	Part No.	Qty	Key No.	Description	Part No.	Qty
1	Drag Knob Assembly	GAE332-03	1	31	Rotor Washer	FAE110-01	1
	2 - Spool Retainer	EAE038-01	1	32	Clutch Retainer Screw	EAE057-01	3
	3 - Drag Washer "D"	EAE080-01	1	33	Clutch Stack Retainer	EAE040-01	1
	4 - Drag Washer	EAE033-01	2	34	Pinion Ball bearing	AAA028-01	1
	5 - Eared Washer	EAE081-01	3	35	Clutch Bearing Adapter	EAE190-01	1
	6 - Spool Unit	GAE420-03	1	36	One Way Clutch Unit	EAE363-01	1
7	Spool Adjust Washer	EAE030-01	1	37	One Way Clutch Spring	EAE216-01	1
8	Clicker Gear	EAE037-01	1	38	Sleeve	EAE139-01	1
9	Spool Clicker Washer	EAE045-01	1	39	Pinion	GAE011-01	1
10	Main Shaft	GAE015-01	1	40	Stopper Cam	GAE090-01	1
11	Rotor Nut	EAE006-01	1	41	Stopper Lever	GAE059-02	1
12	Rotor Nut Lock Screw	EAE094-01	1	42	Stopper Cam Spring	EAE120-01	1
13	Rotor Fasten Shim	EAE110-01	1	43	Stopper Cam Screw	EAE135-01	1
14	Rotor	GAE009-03	1	44	Body Assembly	GAE301-01	1
15	Bail Holder Side Cover	HAE087-03	1	45	Handle Screw Cap	EAE073-01	1
16	Line Roller Screw	EAE108-01	1	46	Toothed Lock washer	EAE075-01	1
17	Arm Lever	GAE007-03	1	47	Body Ball bearing	AAA028-01	1
18	Line Roller Collar	EAE102-01	1	48	Drive Gear	EAE012-01	1
19	Line Roller Washer	FAE102-01	1	49	Cover Ball bearing	TW058-01	1
20	Bushing	EAE157-01	1	50	Bearing	n/a	1
21	Line Roller	GAE004-01	2	51	O/S Gear	FAE053-01	1
22	Bail Assembly	GAE347-03	1	52	O/S Slider	GAE025-01	1
23	Arm Lever Screw	EAE042-01	1	53	O/S Slider Screw	EAE100-01	1
24	Bail Holder Screw	EAE042-01	1	54	Side Cover Assembly	GAE323-03	1
25	Kick Lever	GAE019-01	1	55	Side Cover Screw	FAE085-01	1
26	Actuator Lever	EAE116-01	1	56	Side Cover Screw	FAE085-01	3
27	Actuator Spring	EAE022-01	1	57	Handle Assembly	GAE418-03	1
28	Actuator	EAE031-01	1				
29	Arm Lever Side Cover	GAE087-03	1				
30	Arm Lever Side Cover Screw	EAE077-01	1				