# QUANTUM®

## OP40D

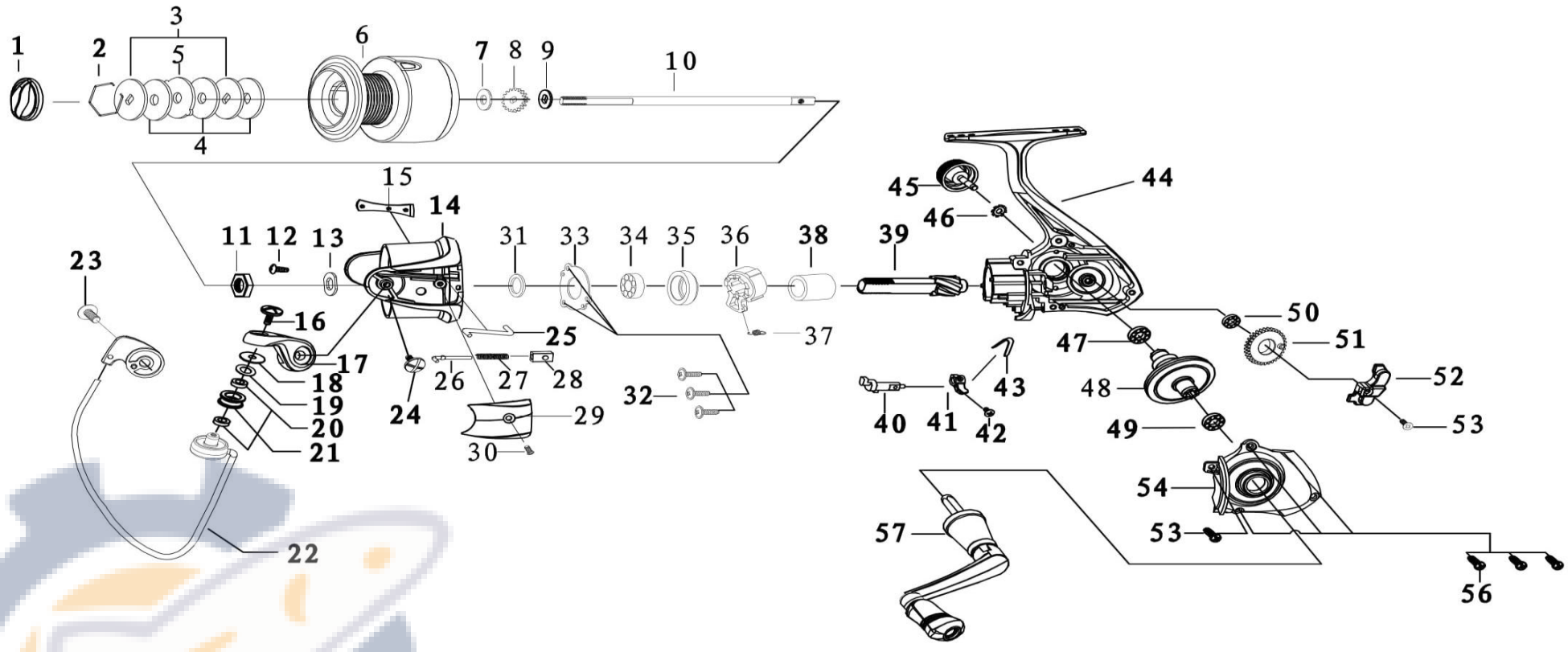


ReelSchematic

## Quantum OPTIX OP40D Part List

| Key No. | Description | Part No. | Qty | Key No. | Description | Part No. | Qty |
|---|---|---|---|---|---|---|---|
| 1 | Drag Knob Assembly | GAE332-03 | 1 | 31 | Rotor Washer | FAE110-01 | 1 |
| | 2 - Spool Retainer | EAE038-01 | 1 | 32 | Clutch Retainer Screw | EAE057-01 | 3 |
| | 3 - Drag Washer "D" | EAE080-01 | 1 | 33 | Clutch Stack Retainer | EAE040-01 | 1 |
| | 4 - Drag Washer | EAE033-01 | 2 | 34 | Pinion Ball bearing | AAA028-01 | 1 |
| | 5 - Eared Washer | EAE081-01 | 3 | 35 | Clutch Bearing Adapter | EAE190-01 | 1 |
| | 6 - Spool Unit | HAE420-03 | 1 | 36 | One Way Clutch Unit | EAE363-01 | 1 |
| 7 | Spool Adjust Washer | EAE030-01 | 1 | 37 | One Way Clutch Spring | EAE216-01 | 1 |
| 8 | Clicker Gear | EAE037-01 | 1 | 38 | Sleeve | EAE139-01 | 1 |
| 9 | Spool Clicker Washer | EAE045-01 | 1 | 39 | Pinion | GAE011-01 | 1 |
| 10 | Main Shaft | GAE015-01 | 1 | 40 | Stopper Cam | GAE090-01 | 1 |
| 11 | Rotor Nut | EAE006-01 | 1 | 41 | Stopper Lever | GAE059-02 | 1 |
| 12 | Rotor Nut Lock Screw | EAE094-01 | 1 | 42 | Stopper Cam Spring | EAE120-01 | 1 |
| 13 | Rotor Fasten Shim | EAE110-01 | 1 | 43 | Stopper Cam Screw | EAE135-01 | 1 |
| 14 | Rotor | HAE009-03 | 1 | 44 | Body Assembly | GAE301-01 | 1 |
| 15 | Bail Holder Side Cover | HAE087-03 | 1 | 45 | Handle Screw Cap | EAE073-01 | 1 |
| 16 | Line Roller Screw | EAE108-01 | 1 | 46 | Toothed Lock washer | EAE075-01 | 1 |
| 17 | Arm Lever | GAE007-03 | 1 | 47 | Body Ball bearing | AAA028-01 | 1 |
| 18 | Line Roller Collar | EAE102-01 | 1 | 48 | Drive Gear | EAE012-01 | 1 |
| 19 | Line Roller Washer | FAE102-01 | 1 | 49 | Cover Ball bearing | TW058-01 | 1 |
| 20 | Bushing | EAE157-01 | 1 | 50 | Bearing | n/a | 1 |
| 21 | Line Roller | GAE004-01 | 2 | 51 | O/S Gear | HAE053-01 | 1 |
| 22 | Bail Assembly | HAE347-03 | 1 | 52 | O/S Slider | GAE025-01 | 1 |
| 23 | Arm Lever Screw | EAE042-01 | 1 | 53 | O/S Slider Screw | EAE100-01 | 1 |
| 24 | Bail Holder Screw | EAE042-01 | 1 | 54 | Side Cover Assembly | GAE323-03 | 1 |
| 25 | Kick Lever | HAE019-01 | 1 | 55 | Side Cover Screw | FAE085-01 | 1 |
| 26 | Actuator Lever | EAE116-01 | 1 | 56 | Side Cover Screw | FAE085-01 | 3 |
| 27 | Actuator Spring | EAE022-01 | 1 | 57 | Handle Assembly | GAE418-03 | 1 |
| 28 | Actuator | EAE031-01 | 1 | | | | |
| 29 | Arm Lever Side Cover | GAE087-03 | 1 | | | | |
| 30 | Arm Lever Side Cover Screw | EAE077-01 | 1 | | | | |
| | | | | | | | |
| | | | | | | | |