www.reelschematic.com

QUANTUM PRO1C

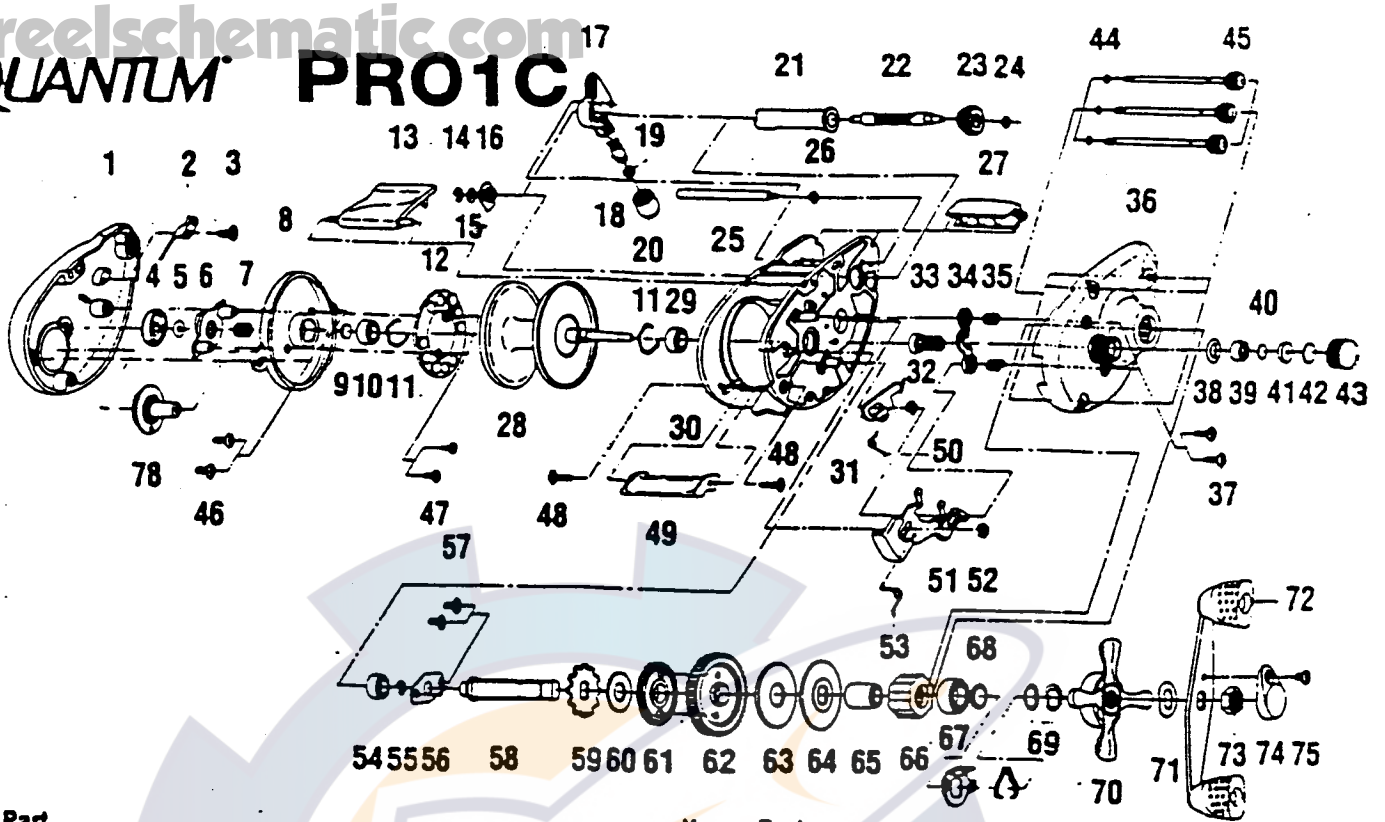

Key No.	Part No.	Description	Price
1	TW023	LEFT SIDE COVER	8.24
2	QW108	CLICKER	.93
3	QW125	SPOOL COVER SCREW	.93
4	UW026	MAGNET CONTROL CAM	1.53
5	CX4250	O RING	.49
6	QW028	SLIDE CAM	1.13
7	CX4301	MAGNET RET. SPRING	.36
8	QW051	SPOOL COVER	2.68
9	QW032-1	SPOOL TENSION KNOB	.52
10	SW017	CRANK SHAFT BEARING	6.59
11	QW080	CLIP RING	.52
12	QW330	MAGNET PLATE ASSY	5.51
13	TW027	HOOD	5.46
14	ZX4657	RETAINER CLIP	.69
15	QW035-3	WASHER - WORM SHAFT	.62
16	QW067	WORM SHAFT BUSHING	.93
17	QW347	LINE GUIDE CARRIER	5.51
18	QW006	LINE GUIDE PAWL	2.68
19	QW035-3	WASHER - WORM SHAFT	.62
20	TW007	LINE GUIDE CARRIER SCREW	2.77
21	QW016	WORM SHAFT GUIDE	1.91
22	QW072	WORM SHAFT	6.95
23	QW085	LEVEL WIND GEAR	1.70
24	VX4243	E-CLIP	.62
25	TW061	STABILIZER BAR	2.68
26	VX4243	E-CLIP	.62
27	TW099	FRONT SUPPORT	3.24
28	QW321	SPOOL ASSY	14.42
29	SW017	CRANK SHAFT BEARING	6.59
30	TW001	FRAME	26.24
31	QW077	KICK LEVER	1.49
32	CX4152	WORM SHAFT RETAINER	.31
33	QW311	PINION GEAR	9.79
34	QW025	PINION YOKE	.93
35	QW040	PINION YOKE SPRING	.93
36	TW324	RIGHT SIDE COVER	8.55
37	QW053-2	RIGHT SIDE COVER SCREW	.93
38	CX4258	O RING	.36
39	QW117	BEARING	8.45

Key No.	Part No.	Description	Price
40	QW032-1	SPOOL TENSION KNOB	.52
41	QW081	COLLAR	.93
42	QW082	SPOOL CUSHION WASHER	.93
43	TW033	SPOOL TENSION KNOB	4.85
44	QW073	RING-THUMB SCREW RET.	1.13
45	QW374	THUMB SCREW	1.13
46	QW125	SPOOL COVER SCREW	.93
47	QW076	SCREW	.62
48	QW050	THUMB REST SCREW	.93
49	QW009	THUMB REST	.93
50	QW097	KICK LEVER SPRING	.62
51	QW339	RELEASE SLIDER ASSY	2.99
52	CX4152	WORM SHAFT RETAINER	.31
53	QW104	RELEASE SLIDER SPRING	.93
54	QW017	CRANK SHAFT BEARING	6.59
55	CX4152	WORM SHAFT RETAINER	.31
56	QW002	CRANK SHAFT RETAINER	1.13
57	TW107	CRANK SHAFT RET. SCREW	.93
58	QW008	CRANK SHAFT	5.41
59	QW083	TRIP RATCHET	1.70
60	QW111	WASHER	.62
61	QW112	GEAR - L/W IDLER	1.49
62	QW012	DRIVE GEAR	10.56
63	QW059	DRAG DISC	2.94
64	QW045	DRAG WASHER	1.24
65	QW052	CLUTCH SLEEVE	3.19
66	QW063	ANTI-REVERSE CLUTCH	10.56
67	TW058	BEARING - CRANK SHAFT TOP	6.70
68	TW035	CRANK SHAFT WASHER	1.44
69	CX4662	DRIVE SHAFT SPR. WSHR	.36
70	QW055	DRAG STAR	2.73
71	CX4660	HANDLE WASHER	.36
72	TW318	HANDLE ASSY	6.18
73	QW003	HANDLE NUT	1.60
74	QW034	HANDLE NUT CAP	.93
75	QW123-1	HANDLE NUT CAP SCREW	.93
76	TW110	CLICK SPRING RETAINER	2.16
77	TW114	CLICK SPRING	1.08
78	TW026	MAGNET CONTROL DIAL	1.53

Prices subject to change without notice. Prices do not include postage and handling.

PLEASE ORDER BY PART NUMBER

Rev. 5/93

Zebco Division Brunswick Corporation, Box 270, Tulsa, OK 74101 USA 918-836-5581

BRUNSWICK