www.reelschematic.com

QUANTUM
Response
RE40F

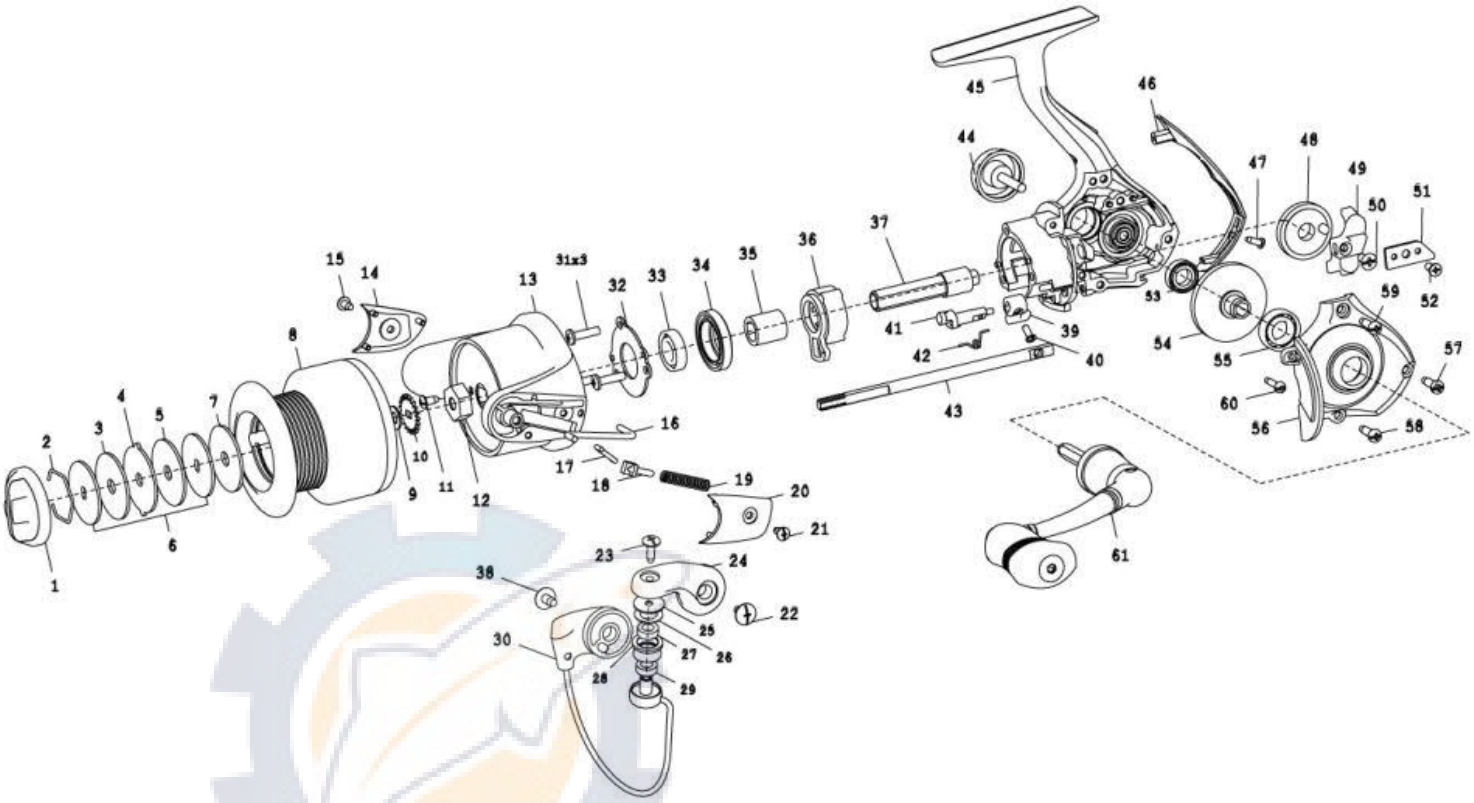

Quantum Response RE40F Spinning Reel Part List

Key #	Description	Part No.	Key #	Description	Part No.
1	Drag Knob Assembly	VG332-01	32	Retainer Plate	TG060-01
2	Retainer Ring	UG038-01	33	Pinion Ball Bearing	NO028-01
3	Drag Friction Washer	UG030-01	34	Ball Bearing Adapter	TG190-01
4	Drag Keyed Washer	UG081-01	35	Clutch Sleeve	TG139-01
5	Drag Friction Washer	UG030-01	36	Clutch Assembly	TG063-01
6	Drag "D" Washer	UG080-01	37	Pinion	VG011-01
7	Drag Friction Washer	UG030-01	38	Bail Holder Screw	TG164-01
8	Spool Assembly	VG321-51	39	Anti-Reverse Switch	UG059-01
9	Spool Friction Washer	TG039-01	40	Anti-Reverse Switch Screw	TG135-01
10	Click Gear	TG037-01	41	Anti-Reverse Cam	UG090-01
11	Rotor Nut Retainer Screw	TG094-01	42	Anti-Reverse Cam Spring	TG089-01
12	Rotor Nut	TG006-01	43	Main Shaft	VG015-01
13	Part Not Available	N/A	44	Handle Screw Cap Assembly	TG249-01
14	Bail Holder Cover	VG087-01	45	Part Not Available	N/A
15	Bail Holder Cover Screw	TG085-01	46	Rear Cap	VG250-01
16	Kick Lever	VG019-01	47	Rear Cap Screw	TG168-01
17	Bail Trip Lever Shaft	TG115-01	48	O/S Gear	VG053-01
18	Bail Trip Lever	TG116-01	49	O/S Slider	VG025-01
19	Bail Spring	TG117-01	50	Main Shaft Screw	TG100-01
20	Arm Lever Cover	VG046-01	51	O/S Slider Guide	VG078-01
21	Arm Lever Cover Screw	TG085-01	52	O/S Slider Guide Screw	TG094-01
22	Arm Lever Screw	TG164-01	53	Drive Gear Ball Bearing	CH027-01
23	Line Roller Screw	TG108-01	54	Drive Gear	VG012-01
24	Arm Lever	VG007-01	55	Side Cover Ball Bearing	NO028-01
25	Line Roller Collar	VG104-01	56	Side Cover Assembly	VG123-01
26	Line Roller Washer	TG102-01	57	Side Cover Screw "A"	TG057-01
27	Line Roller Bushing	TG202-01	58	Side Cover Screw "B"	TG057-01
28	Line Roller	VG004-01	59	Side Cover Screw "C"	TG057-01
29	Line Roller Bearing	EH158-01	60	Side Cover Screw "D"	UG057-01
30	Bail Assembly	VG347-51	61	Handle Assembly	UG318-01
31	Retainer Plate Screw	UG057-01			