QUANTUM

Smoke SHD201SPT

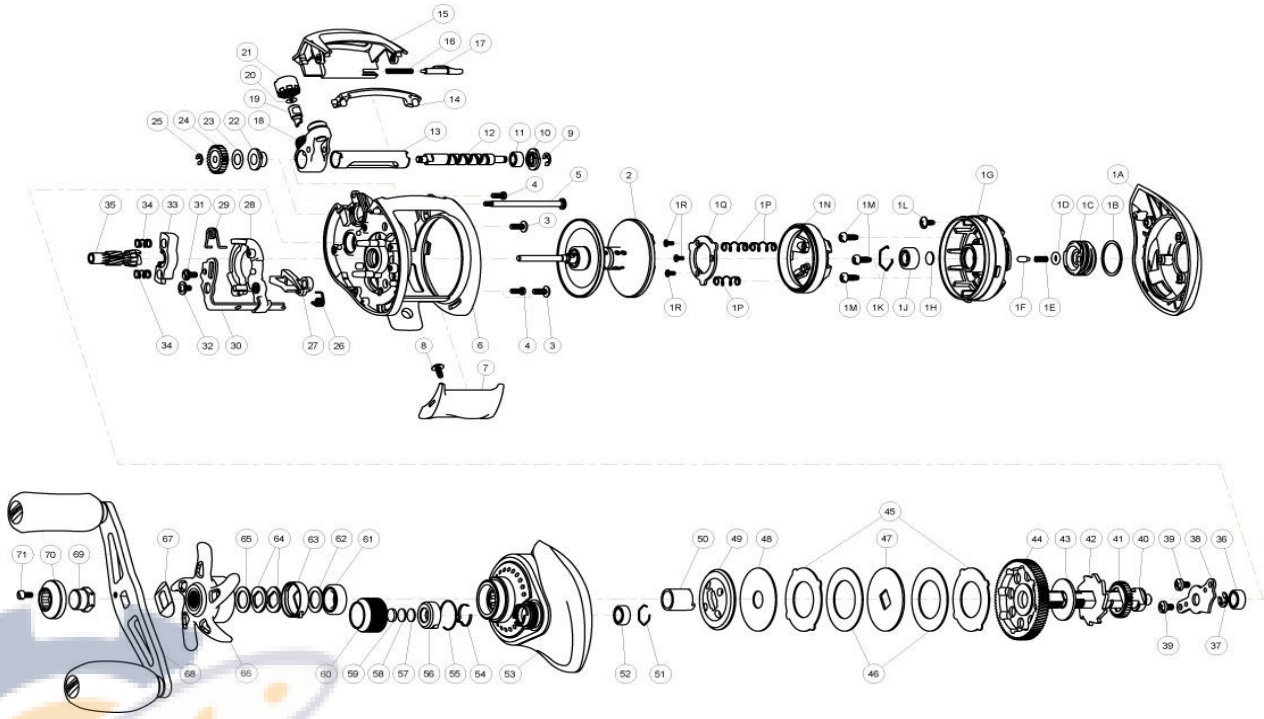

Smoke SHD201SPT Baitcast Reel Part List

g Key #	Description	Qty.	Part No.	Key #	Description	Qty.	Part No.
1	Palm Side Cover Kit include	1	DV4023-01	29	Release Slider Spring	1	YW104-01
	1A - Palm Side Cover	1	DV023-01	30	Release Slider Link	1	YW036-01
	1B - Centrifugal Dial Washer	1	SB111-01	31	Release Slider Link Screw	1	EW125-01
	1C - Centrifugal Dial	1	TB026-01	32	Release Slider Screw	1	CX076-03
	1D - Centrifugal Dial Friction Ring	1	SB105-01	33	Pinion Yoke	1	YW025-01
	1E - Centrifugal Dial Click Spring	1	YW114-01	34	Yoke Spring	2	GX040-01
	1F - Centrifugal Dial Click Pawl	1	PW098-01	35	Pinion Gear	1	DV011-02
	1G - Spool Cover	1	DV051-01	36	Crank Shaft Ball Bearing - L	1	SW017-01
	1H - Spool Tension Shim	1	QW032-04	37	E-Clip	1	QW120-01
	1J - Spool Shaft Ball Bearing - Palm	1	QV017-01	38	Crank Shaft Retainer	1	PW002-01
	1K - Clip Ring	1	HV080-01	39	Crank Shaft Retainer Screw	2	JX107-02
	1L - Spool Cover Screw "B"	1	DW125-01	40	Crank Shaft	1	YW008-04
	1M - Spool Cover Screw "A"	3	WW107-01	41	O/S Drive Gear	1	PW112-01
	1N - Brake Ring Assembly	1	TB342-01	42	Trip Ratchet	1	PW083-02
	1P - Brake Ring Slider Spring	3	DW070-01	43	Trip Ratchet Washer	1	YW111-01
	1Q - Brake Ring Slider Spring Retainer	1	DW129-02	44	Drive Gear	1	YW012-02
	1R - Screw	3	DW107-01	45	Drag Key Washer	2	PW048-01
2	Spool Assembly	1	XW321-01	46	Drag Disc - A	2	PW059-01
3	Gear Side Cover Screw - B	2	QW057-03	47	Drag "D" Washer	1	YW045-01
4	Gear Side Cover Screw - A	2	LF057-01	48	Drag Disc - B	1	YW059-01
5	Stabilizer Bar - A	1	PW061-02	49	Drag Washer	1	PW045-01
6	Frame	1	YW001-16	50	One Way Clutch Sleeve	1	UX052-01
7	Thumb Bar	1	YW009-01	51	Clip Ring	1	EB080-01
8	Thumb Bar Screw	1	CW125-01	52	Tension Knob Ball Bearing	1	SW017-01
9	E-Clip	1	NX092-01	53	Gear Side Cover Assembly	1	YW324-20
10	Bearing Retainer	1	PW067-01	54	Tension Knob Click Spring	1	PW114-01
11	Worm Shaft Ball Bearing	1	XX117-01	55	Tension Knob Click Ratchet Retainer	1	YW080-01
12	Worm Shaft	1	HV072-02	56	Tension Knob Click Ratchet	1	PW113-01
13	Worm Shaft Guide	1	SB016-01	57	Spool Tension Washer	1	QW032-04
14	Top Support	1	YW094-07	58	Spool Tension Support Washer	1	PW032-01
15	Front Support	1	FW099-01	59	Spool Cushion Washer	1	EX082-02
16	Side Cover Locking Lever Spring	1	ZW096-01	60	Spool Tension Knob	1	PW033-10
17	Side Cover Locking Lever	1	TX119-02	61	Crank Shaft Ball Bearing	1	TW058-01
18	Line Guide Carrier Assembly	1	PW347-01	62	Crank Shaft Ball Bearing Washer	1	TW035-02
19	Line Guide Pawl	1	CX006-01	63	Drag Click Spring Assembly	1	YX4114-01
20	Carrier Washer	1	BV035-01	64	Spring "D" Washer	2	JX046-01
21	Line Guide Carrier Screw	1	ZW007-01	65	Star Drag Washer	1	ZW032-01
22	Worm Shaft Bushing - Gear Side	1	PW068-01	66	Star Drag	1	GW055-02
23	O/S Pinion Gear Washer	1	EX035-01	67	Handle Washer	1	NX054-01
24	O/S Pinion Gear	1	PW085-01	68	Handle Assembly	1	XW318-02
25	E-Clip	1	NX090-01	69	Handle Nut	1	DW003-06
26	Kick Lever Spring	1	MX097-01	70	Handle Nut Cap	1	DW034-02
27	Kick Lever	1	YW077-01	71	Handle Nut Cap Screw	1	DW050-02
28	Release Slider	1	YW039-01				