QUANTUM®

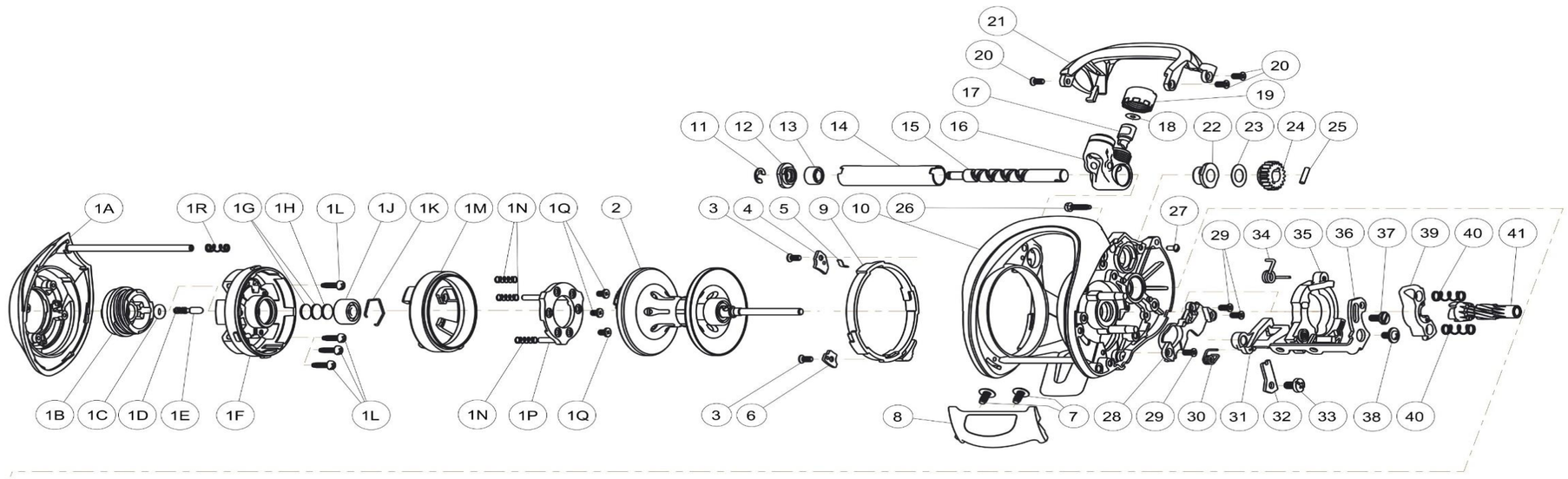

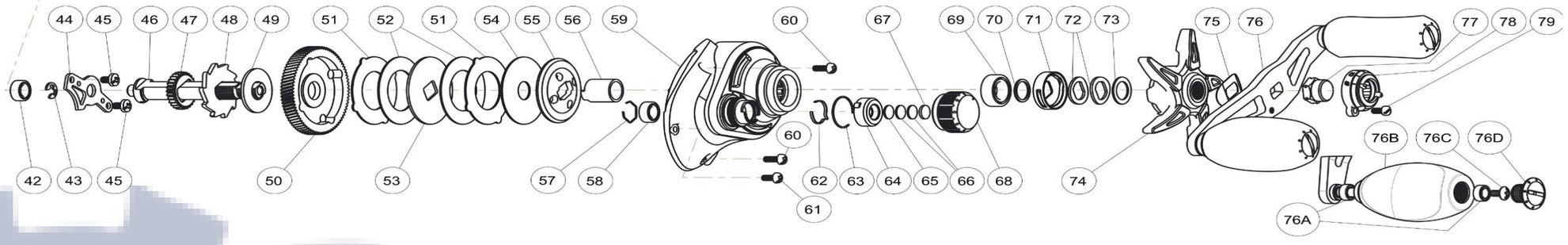

Quantum Smoke SM100SPT Parts List

Key #	Description	Part No. SM100SPT	Part No. QTY	Key #	Description	Part No. SM100SPT	Part No. QTY
1	Palm Side Cover Kit include	UB4323-01	1	35	Release Slider	UB039-01	1
	1A - Palm Side Cover Assembly	UB323-01	1	36	Release Slider Link	UB036-01	1
	1B - Centrifugal Dial	UB026-01	1	37	Release Slider Link Screw	EW125-01	1
	1C - Centrifugal Dial Friction Ring	SB105-01	1	38	Release Slider Screw	CX076-03	1
	1D - Centrifugal Dial Click Spring	VB114-01	1	39	Pinion Yoke	SB025-01	1
	1E - Centrifugal Dial Click Pawl	PW098-01	1	40	Yoke Spring	GX040-01	2
	1F - Spool Cover	UB051-01	1	41	Pinion Gear	HB011-01	1
	1G - Space Washer	PW032-01	2	42	Crank Shaft Ball Bearing - L	SW017-06	1
	1H - Spool Tension Shim	QW032-04	1	43	E-Clip	QW120-01	1
	1J - Spool Shaft Ball Bearing - Paln	QV017-04	1	44	Crank Shaft Retainer	UB002-01	1
	1K - Clip Ring	HV080-01	1	45	Crank Shaft Retainer Screw	JX107-02	2
	1L - Spool Cover Screw	ZW053-03	4	46	Crank Shaft	YW008-07	1
	1M - Brake Ring Assembly	UB342-01	1	47	O/S Drive Gear	UB112-01	1
	1N - Brake Ring Slider Spring	UB040-01	3	48	Trip Ratchet	PW083-02	1
	1P - Brake Ring Slider Spring Retai	UB129-01	1	49	Trip Ratchet Washer	YW111-01	1
	1Q - Screw	DW107-03	3	50	Drive Gear	HB012-01	1
	1R - Tethered Spring	UB070-01	1	51	Drag Key Washer	PW048-01	2
2	Spool Assembly	UB321-01	1	52	Drag Disc - A	PW059-01	2
3	Locking Lever Retainer Screw	KW107-01	2	53	Drag "D" Washer	YW045-01	1
4	Locking Lever Retainer "A"	UB056-01	1	54	Drag Disc - B	YW059-01	1
5	Locking Lever Spring	UB114-01	1	55	Drag Washer	PW045-02	1
6	Locking Lever Retainer "B"	UB136-01	1	56	One Way Clutch Sleeve	UX052-02	1
7	Thumb Bar Screw	CW125-01	2	57	Clip Ring	EB080-01	1
8	Thumb Bar Assembly	UB309-01	1	58	Tension Knob Ball Bearing	SW017-06	1
9	Locking Lever	UB062-01	1	59	Gear Side Cover Assembly	UB324-03	1
10	Frame	UB001-01	1	60	Gear Side Cover Screw "A"	BV123-05	2
11	E-Clip	NX092-01	1	61	Gear Side Cover Screw "B"	BV123-06	1
12	Bearing Retainer	UB067-01	1	62	Tension Knob Click Spring	PW114-01	1
13	Worm Shaft Ball Bearing	XX117-04	1	63	Click Ratchet Retainer	YW080-01	1
14	Worm Shaft Guide	SB016-01	1	64	Tension Knob Click Ratchet	PW113-01	1
15	Worm Shaft	UB072-01	1	65	Spool Tension Shim	QW032-04	1
16	Line Guide Carrier Assembly	UB347-01	1	66	Space Washer	PW032-01	2
17	Line Guide Pawl	CX006-01	1	67	Spool Tension Cushion Washer	EX082-02	1
18	Carrier Washer	BV035-01	1	68	Spool Tension Knob	UB033-01	1
19	Line Guide Carrier Screw	ZW007-01	1	69	Crank Shaft Bearing	TW058-09	1
20	Front Support Screw	KW107-01	3	70	Crank Shaft Washer	TW035-02	1
21	Front Support	UB099-01	1	71	Drag Click Spring Assembly	YX4114-01	1
22	Worm Shaft Bushing - Gear Side	PW068-01	1	72	Spring "D" Washer	JX046-01	2
23	O/S Pinion Gear Washer	EX035-01	1	73	Star Drag Washer	ZW032-01	1
24	O/S Pinion Gear	UB085-01	1	74	Star Drag	UB055-01	1
25	Pin	UB093-01	1	75	Handle Washer	NX054-01	1
26	Side Cover Screw	ZW053-05	1	76	Handle Assembly	UB318-01	1
27	Tethered Shaft Stop Screw	UB123-01	1	76A	Handle Knob Ball Bearing	EH158-07	4
28	Kick Lever Plate	UB010-01	1	76B	Handle Knob Assembly	XW313-02	2
29	Kick Lever Plate Screw	KW107-02	3	76C	Handle Knob Screw	QW123-11	2
30	Kick Lever Spring	SB097-01	1	76D	Handle Knob Cap	XW115-02	2
31	Kick Lever	PW077-01	1	77	Handle Nut	UB003-01	1
32	Kick Lever Guide Plate	SB161-01	1	78	Handle Nut Retainer Assembly	UB334-01	1
33	Kick Lever Guide Plate Screw	JX107-02	1	79	Handle Nut Cap Screw	DW050-02	1
34	Release Slider Spring	SB104-01	1				