QUANTUM®

SSM40XPT

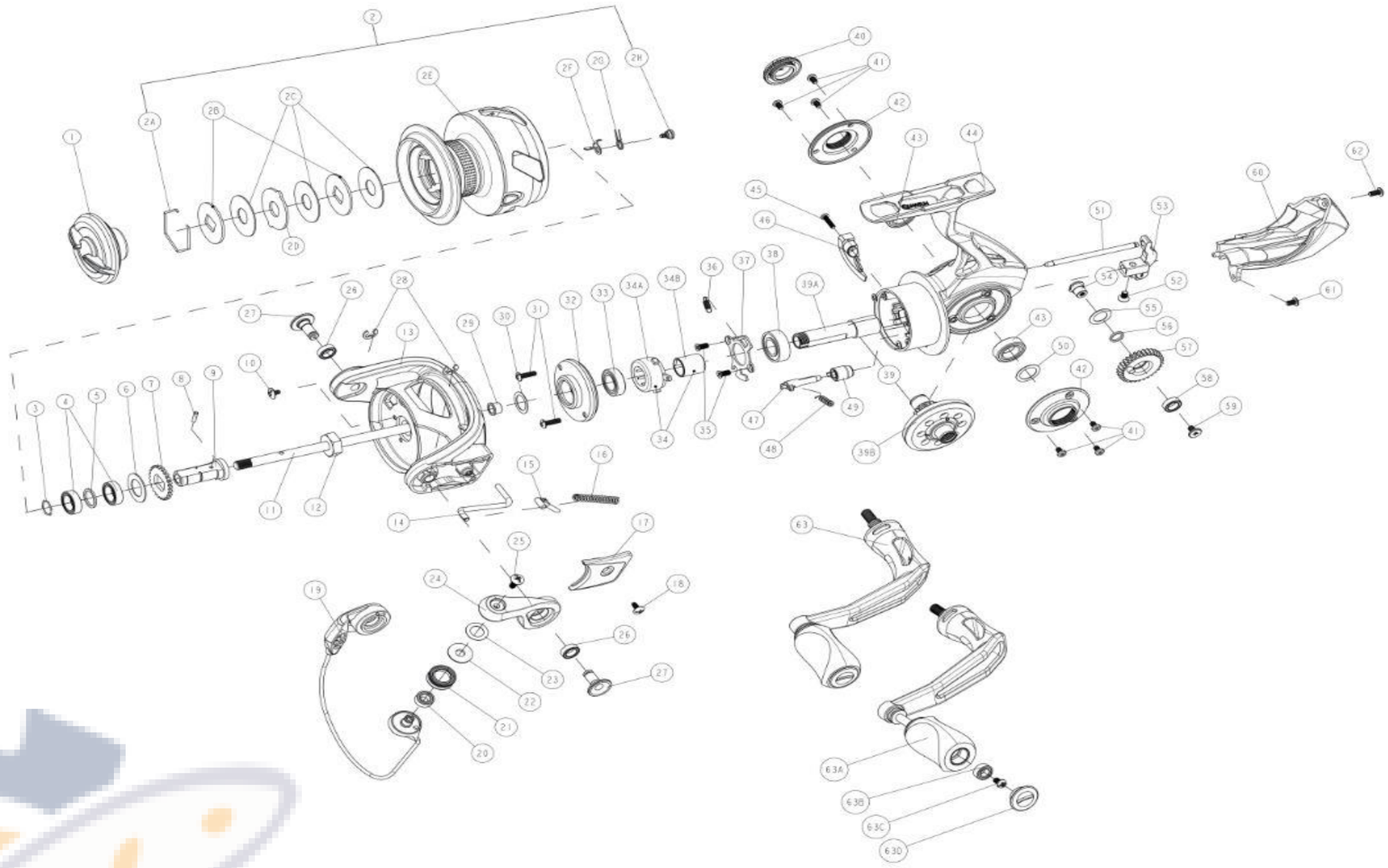

Quantum SSM40XPT Bait Cast Reel Part List

Key #	Description	Part No.	QTY	Key #	Description	Part No.	QTY
1	Drag Knob Assembly	SAE332-01	1	33	Ball Bearing	TW058-09	1
2	Spool Kit Include	SAE321-02	1	34	One Way Clutch Kit Include	N/A	
	2A - Retaining Ring	RQ038-01	1		34A - Clutch Assembly	QAE363-01	1
	2B - Drag Washer "D"	XAA080-11	2		34B - Clutch Sleeve	QAE139-01	1
	2C - Drag Washer "B"	WAA033-01	3	35	Ball Bearing Retainer Screw	QAE123-01	2
	2D - Drag Washer "A"	WAA081-11	1	36	Coil Spring	QAE216-01	1
	2E - Spool Assembly	SAE321-02	1	37	Ball Bearing Retainer	SAE040-01	1
	2F - Clicker	QAE103-01	1	38	Ball Bearing	UK028-06	1
	2G - Spring	QAE068-01	1	39	Gear Kit Include	N/A	
	2H - Screw	QAE125-01	1		39A - Pinion	SAE011-01	1
3	Retainer Ring	WAA038-01	1		39B - Drive Gear	SAE312-01	1
4	Ball Bearing	KT158-05	2	40	Dust Cap	QAE054-01	1
5	Washer	SAE076-01	1	41	Screw	QAE107-01	6
6	Spool Adjust Washer	WAA030-01	1	42	Body Cosmetic Cap	SAE161-01	2
7	Click Gear	WAA037-01	1	43	Ball Bearing	TW058-09	2
8	Pin	UAA134-02	1	44	Body Assembly	SAE301-02	1
9	Spool Metal	WAA117-01	1	45	Trip Bumper Screw	AT136-01	1
10	Screw	UAA094-02	1	46	Trip Bumper	SAE119-01	1
11	Main Shaft	SAE015-01	1	47	A/R Cam	N/A	
12	Rotor Nut	BAA006-02	1	48	Coil Spring	N/A	
13	Rotor	SAE009-01	1	49	A/R Switch	N/A	
14	Kick Lever	SAE019-01	1	50	Drive Gear Adjust Washer	BAA105-03	1
15	Cam	SAE031-01	1	51	Stablized Bar	SAE211-01	1
16	Coil Spring	WAA022-02	1	52	Screw	RQ100-01	1
17	Rotor Cover	SAE087-01	1	53	O/S Slider	SAE025-01	1
18	Rotor Cover Screw	CW125-02	1	54	O/S Gear Stand Nut	QAE149-01	1
19	Bail Assembly	SAE347-01	1	55	Washer	QAE026-01	1
20	Linr Roller Ball Bearing	DT202-05	1	56	Washer	QAE158-01	1
21	Line Roller	DAA004-02	1	57	O/S Gear Assembly	SAE353-01	1
22	Line Roller Washer	BAA102-01	1	58	O/S Gear Ball Bearing	CT157-07	1
23	Line Roller Collar	DAA102-01	1	59	O/S Gear Screw	QAE111-01	1
24	Arm Lever	SAE007-01	1	60	Rear Cap	EAF250-01	1
25	Line Roller Screw	BAA108-02	1	61	Screw	QAE050-01	1
26	Ball Bearing	CT157-07	2	62	Screw	QAE057-01	1
27	Pin	QAE041-02	2	63	Handle Assembly	SAE318-02	1
28	E-Clip	GH034-01	2	63A	Handle Knob Assembly	WAB313-02	1
29	Main Shaft Bushing	WAA213-01	1	63B	Ball Bearing	DT202-05	1
30	Rotor Adjust Washer	BAA105-03	1	63C	Screw	QW123-01	1
31	Bearing Holder Screw	QAE061-01	2	63D	Handle Knob Cap	WAB138-03	1
32	Ball Bearing Holder	SAE122-02	1				