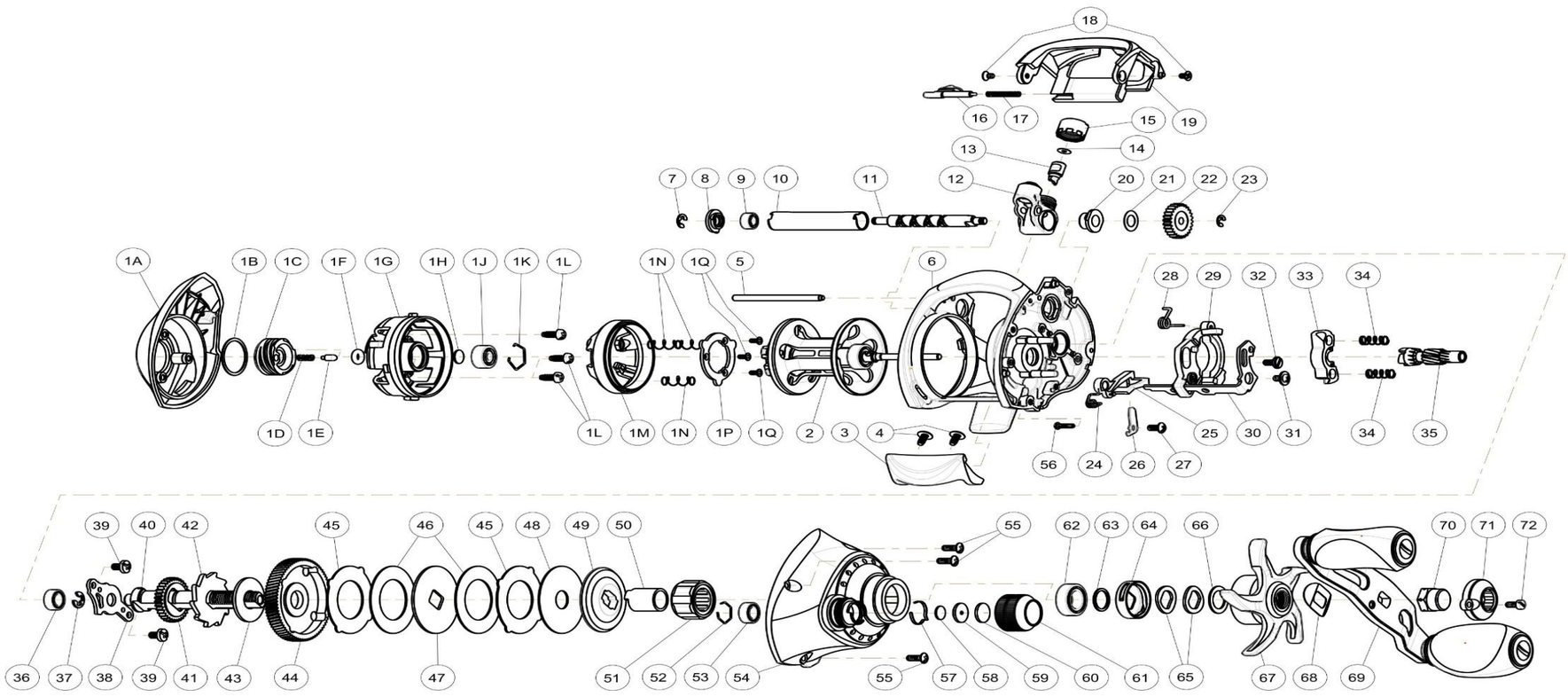


## Quantum Smoke VP100HPT Parts List

| Key # | Description | Part No. VP100HPT | QTY | Key # | Description | Part No. VP100HPT | QTY |
|---|---|---|---|---|---|---|---|
| 1 | Palm Side Cover Kit include | VA423-02 | 1 | 30 | Release Slider Link | LX036-01 | 1 |
| | 1A - Palm Side Cover | VA023-02 | 1 | 31 | Release Slider Screw | CX076-03 | 1 |
| | 1B - Centrifugal Dial Washer | SB111-01 | 1 | 32 | Release Slider Link Screw | EW125-02 | 1 |
| | 1C - Centrifugal Dial | SB026-01 | 1 | 33 | Pinion Yoke | SB025-01 | 1 |
| | 1D - Centrifugal Dial Click Spring | YW114-01 | 1 | 34 | Yoke Spring | GX040-01 | 2 |
| | 1E - Centrifugal Dial Click Pawl | PW098-01 | 1 | 35 | Pinion Gear | VA011-01 | 1 |
| | 1F - Centrifugal Dial Frection Ring | SB105-01 | 1 | 36 | Crank Shaft Ball Bearing - L | SW017-01 | 1 |
| | 1G - Spool Cover | VA051-01 | 1 | 37 | E-Clip | QW120-01 | 1 |
| | 1H - Spool Tension Shim | QW032-04 | 1 | 38 | Crank Shaft Retainer | VA002-02 | 1 |
| | 1J - Ball Bearing - Spool Shaft (Pal | QV017-04 | 1 | 39 | Crank Shaft Retainer Screw | JX107-02 | 2 |
| | 1K - Clip Ring | HV080-01 | 1 | 40 | Crank Shaft | YW008-07 | 1 |
| | 1L - Spool Cover Screw | WW107-01 | 3 | 41 | O/S Drive Gear | DW112-01 | 1 |
| | 1M - Brake Ring Assembly | VA342-01 | 1 | 42 | Trip Ratchet | PW083-01 | 1 |
| | 1N - Spring - Brake Ring Slider | DW070-01 | 3 | 43 | Trip Ratchet Washer | YW111-01 | 1 |
| | 1P - Retainer - Brake Ring Slider S | VA129-01 | 1 | 44 | Drive Gear | VA012-03 | 1 |
| | 1Q - Retainer Screw | DW107-01 | 3 | 45 | Drag Key Washer | PW048-01 | 2 |
| 2 | Spool Assembly | WA321-01 | 1 | 46 | Drag Disc - A | PW059-01 | 2 |
| 3 | Thumb Bar | VA009-01 | 1 | 47 | Drag "D" Washer | YW045-01 | 1 |
| 4 | Thumb Bar Screw | CW125-01 | 2 | 48 | Drag Disc - B | YW059-01 | 1 |
| 5 | Stabilizer Bar | VA061-01 | 1 | 49 | Drag Washer | VA045-01 | 1 |
| 6 | Frame | VA001-02 | 1 | 50 | One Way Clutch Sleeve | UX052-01 | 1 |
| 7 | E-Clip | NX092-01 | 1 | 51 | One Way Clutch | VA063-01 | 1 |
| 8 | Bearing Retainer | DW067-01 | 1 | 52 | Spool Tension Knob Ball Bearing F | EB080-01 | 1 |
| 9 | Worm Shaft Ball Bearing | XX117-01 | 1 | 53 | Tension Knob Ball Bearing | SW017-01 | 1 |
| 10 | Worm Shaft Guide | DW016-01 | 1 | 54 | Gear Side Cover Assembly | VA324-03 | 1 |
| 11 | Worm Shaft | HV072-02 | 1 | 55 | Gear Side Cover Screw-A | VA053-01 | 3 |
| 12 | Line Guide Carrier | VA047-02 | 1 | 56 | Gear Side Cover Screw-B | VA057-01 | 1 |
| 13 | Line Guide Pawl | CX006-01 | 1 | 57 | Tension Knob Click Spring | PW114-01 | 1 |
| 14 | Line Guide Carrier Washer | BV035-01 | 1 | 58 | Washer - Spool Tension | QW032-04 | 1 |
| 15 | Line Guide Carrier Screw | ZW007-01 | 1 | 59 | Collar - Spool Tension | VA081-01A | 1 |
| 16 | Side Covr Locking Lever | VA119-01 | 1 | 60 | Spool Cushion Washer | VA082-01 | 1 |
| 17 | Spring - Locking Lever | ZW096-01 | 1 | 61 | Spool Tension Knob | VA033-02 | 1 |
| 18 | Screw | CF107-02 | 2 | 62 | Crank Shaft Ball Bearing | TW058-03 | 1 |
| 19 | Front Support | VA099-01 | 1 | 63 | Crank Shaft Ball Bearing Washer | TW035-02 | 1 |
| 20 | Worm Shaft Bushing - Gear Side | PW068-01 | 1 | 64 | Drag Click Spring Assembly | YX4114-01 | 1 |
| 21 | O/S Pinion Gear Washer | EX035-01 | 1 | 65 | Spring "D" Washer | JX046-01 | 2 |
| 22 | O/S Pinion Gear | DW085-01 | 1 | 66 | Star Drag Washer | ZW032-01 | 1 |
| 23 | E-Clip | NX090-01 | 1 | 67 | Star Drag | VA055-02 | 1 |
| 24 | Kick Lever Spring | VA097-01 | 1 | 68 | Handle Washer | NX054-01 | 1 |
| 25 | Kick Lever | PW077-01 | 1 | 69 | Handle Assembly | WA318-01 | 1 |
| 26 | Kick Lever Guide Plate | VA161-01 | 1 | 70 | Handle Nut | DW003-09 | 1 |
| 27 | Kick Lever Guide Plate Screw | JX107-02 | 1 | 71 | Handle Nut Cap | DW034-02 | 1 |
| 28 | Release Slider Spring | VA104-01 | 1 | 72 | Handle Nut Cap Screw | DW050-02 | 1 |
| 29 | Release Slider | VA039-01 | 1 | | | | |
| | | | | | | | |