QUANTUM
SL101HPTS

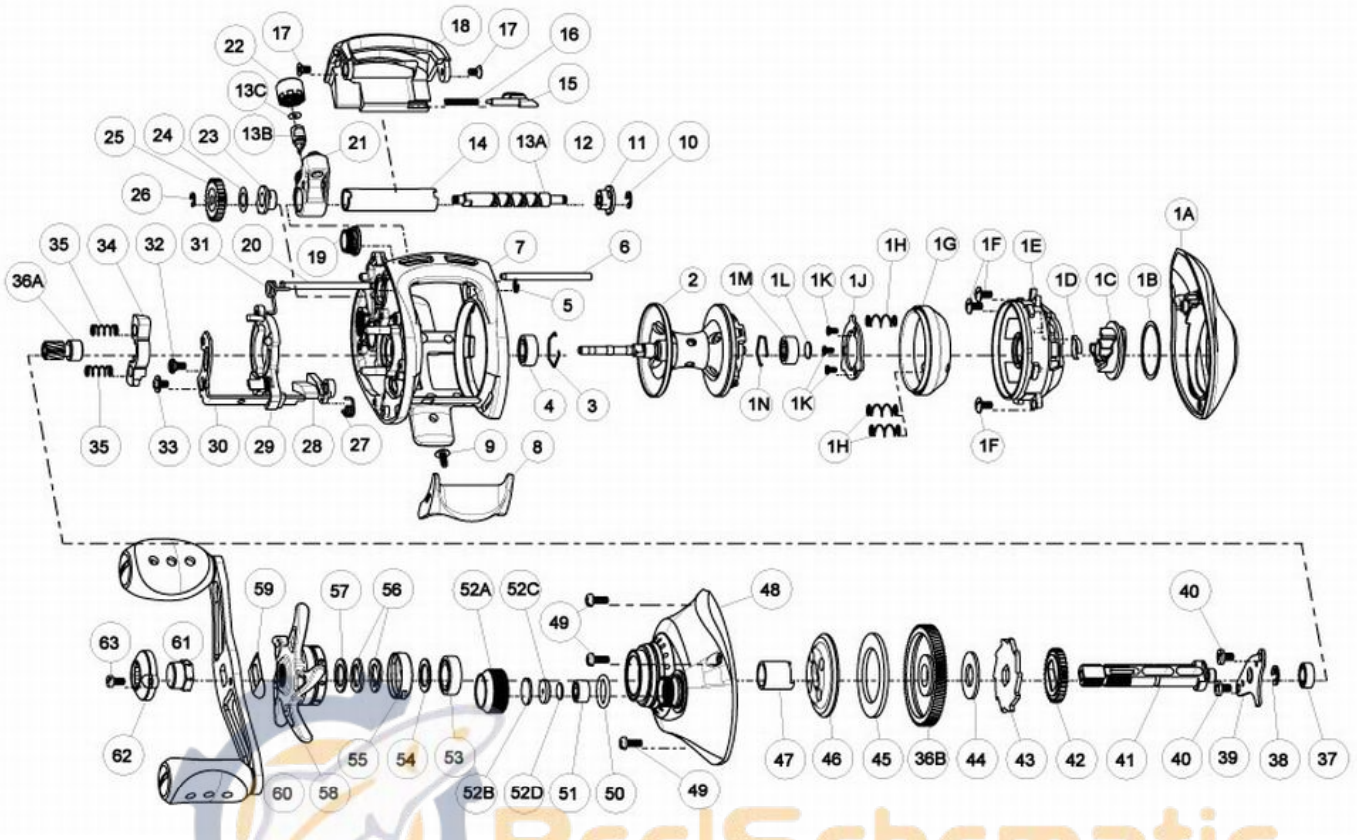

ReelSchematic

Quantum SL101HPTS Bait Cast Reel Part List

Key #	Description	Qty.	Part No.	Key #	Description	Qty.	Part No.
1	Palm Side Cover Kit includes	1	GW4023-05	28	Kick Lever	1	FW077-01
	1A - Palm Side Cover Assembly	1	IN KIT	29	Release Slider	1	FW039-01
	1B - Centrifugal Dial Washer	1	IN KIT	30	Release Slider Link	1	FW036-01
	1C - Centrifugal Dial Assembly	1	IN KIT	31	Release Slider Spring	1	FW104-01
	1D - Centrifugal Dial Spring	1	IN KIT	32	Release Slider Link Screw	1	EW125-02
	1E - Spool Cover	1	IN KIT	33	Release Slider Screw	1	CX076-03
	1F - Spool Cover Screw	1	IN KIT	34	Pinion Yoke	1	FW025-01
	1G - Brake Ring Assembly	1	IN KIT	35	Yoke Spring	2	GX040-01
	1H - Brake Ring Slider Spring	3	IN KIT	36	Gear Kit Includes	1	VX4011-04
	1J - Brake Ring Slider Spring Retainer	1	IN KIT		36A - Pinion Gear Assembly	1	IN KIT
	1K - Brake Ring Spring Retainer Screw	3	IN KIT		36B - Drive Gear	1	IN KIT
	1L - Spool Tension Shim	1	IN KIT	37	Crank Shaft Ball Bearing - L	1	SW017-01
	1M - Spool Shaft Ball Bearing - Palm	1	IN KIT	38	E-Clip	1	QW120-01
	1N - Clip Ring	1	IN KIT	39	Crank Shaft Retainer	1	DW002-02
2	Spool Assembly	1	FW321-14	40	Crank Shaft Retainer Screw	2	JX107-02
3	Clip Ring	1	EX080-01	41	Crank Shaft	1	EW008-02
4	Spool Shaft Ball Bearing - Gear	1	EX017-02	42	O/S Drive Gear	1	DW112-01
5	E-Clip	1	NX090-01	43	Trip Ratchet	1	DW083-01
6	Stabilizer Bar - A	1	DW061-01	44	Trip Ratchet Washer	1	QW111-01
7	Frame	1	FW001-17	45	Drag Disc	1	UX059-01
8	Thumb Bar	1	FW009-02	46	Drag Washer	1	EW045-01
9	Thumb Bar Screw	1	CW125-01	47	One Way Clutch Sleeve	1	UX052-01
10	E-Clip	1	NX092-01	48	Gear Side Cover Assembly	1	FW324-20
11	Wrom Shaft Bushing - Palm	1	AB067-01	49	Gear Side Cover Screw	3	BV123-05
13	Worm Shaft Kit Includes	1	HV4072-02	50	Tension Knob O-Ring	1	QW101-01
	13A - Worm Shaft	1	IN KIT	51	Tension Knob Ball Bearing	1	SW117-01
	13B - Line Guide Pawl	1	IN KIT	52	Spool Tension Knob Kit includes	1	DW4033-09
	13C - Line Guide Carrier Washer	1	IN KIT		52A - Spool Tension Knob	1	IN KIT
14	Worm Shaft Guide	1	DW016-01		52B - Spool Cushion Washer	1	IN KIT
15	Side Cover Locking Lever	1	TX119-02		52C - Spool Tension Collar	1	IN KIT
16	Side Cover Locking Lever Spring	1	ZW096-01		52D - Spool Tension Washer	1	IN KIT
17	Hood Screw	2	HX107-02	53	Crank Shaft Ball Bearing	1	TW058-01
18	Hood	1	FW027-06	54	Crank Shaft Ball Bearing Washer	1	TW035-02
19	Oil Cap Screw	1	DW150-07	55	Drag Click Spring Assembly	1	YX4114-02
20	Stabilizer Bar - B	1	WP061-01	56	Drag "D" Washer	2	JX046-01
21	Line Guide Carrier	1	DW047-04	57	Star Drag Washer	1	ZW032-01
22	Line Guide Carrier Screw	1	ZW007-01	58	Star Drag	1	FW055-07
23	Worm Shaft Bushing - Gear Side	1	DW068-01	59	Handle Washer	1	NX054-01
24	O/S Pinion Gear Washer	1	EX035-01	60	Handle Assembly	1	HX318-04
25	O/S Pinion Gear	1	DW085-01	61	Handle Nut	1	DW003-06
26	E-Clip	1	NX090-01	62	Handle Nut Cap	1	DW034-02
27	Kick Lever Spring	1	MX097-01	63	Handle Nut Cap Screw	1	DW050-02