QUANTUM® STRATEGY SPINNING

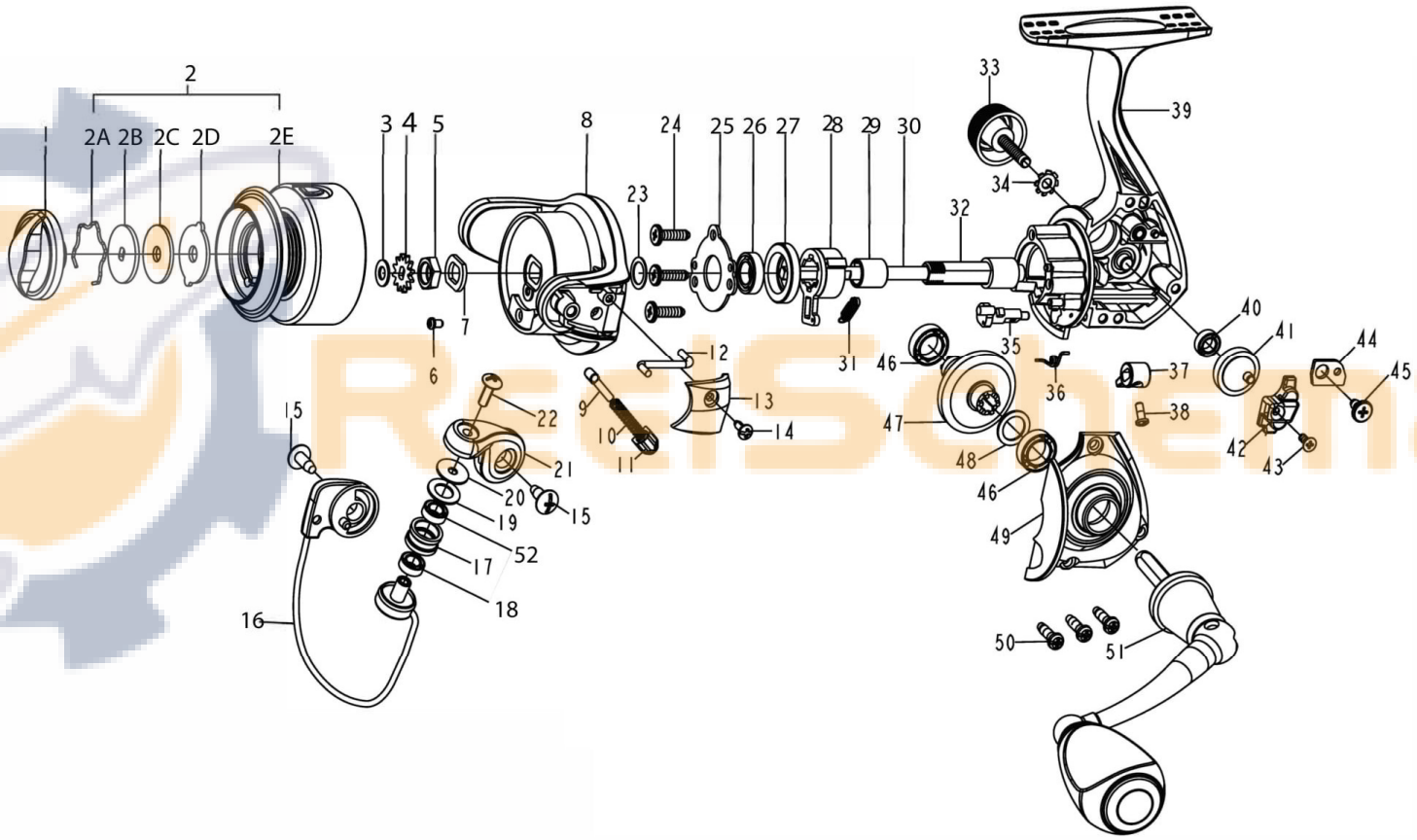

Quantum SR05A Parts List

Key No.	Description	Part No. SR05A	Qty	Key No.	Description	Part No. SR05A	Qty
1	Drag Knob Assembly	HAF332-02	1	25	Clutch Retainer	HAF040-01	1
2	Spool Kit Include	HAF421-02	1	26	Ball Bearing	HAF028-01	1
	2A-Spool Retainer	HAF038-01	1	27	Bearing Holder	HAF190-01	1
	2B-Drag Washer "D"	HAF080-01	1	28	One Way Clutch	HAF363-01	1
	2C-Drag Washer	HAF033-01	1	29	Sleeve	HAF139-01	1
	2D-Eared Washer	HAF081-01	1	30	Main Shaft	HAF015-01	1
	2E-Spool Assembly	HAF321-02	1	31	One Way Clutch Spring	EAE216-01	1
3	Spool Adjust Washer	HAF030-01	1	32	Pinion	HAF011-01	1
4	Clicker Gear	HAF037-01	1	33	Handle Screw Cap	EAE073-02	1
5	Rotor Nut	HAF006-01	1	34	Washer	EAE075-01	1
6	Rotor Nut Lock Screw	HAF094-01	1	35	Stopper Cam	HAF090-01	1
7	Rotor Fasten Shim	HAF110-01	1	36	Stopper Cam Spring	HAF120-01	1
8	Rotor Assembly	HAF309-02	1	37	Stopper Lever	HAF059-01	1
9	Actuator Lever	HAF116-01	1	38	Stopper Cam Screw	EAE135-02	1
10	Coil Spring	HAF022-01	1	39	Body Assembly	HAF301-02	1
11	Actuator	HAF031-01	1	40	O/S Gear Ball Bearing	EH158-07	1
12	Kick Lever	HAF019-01	1	41	O/S Gear	HAF053-01	1
13	Rotor Cover	HAF087-02	1	42	O/S Slider	HAF025-01	1
14	Screw - Rotor Cover	EAE077-02	1	43	Screw - O/S Slider	EAE100-01	1
15	Screw - Arm Lever & Bail Holder	EAE042-02	2	44	Retainer - O/S Slider	HAF078-01	1
16	Bail Assembly	HAF347-02	1	45	Screw - O/S Slider Retainer	EAE094-01	1
17	Line Roller	HAF004-01	1	46	Ball Bearing	CH027-06	2
18	Bushing	HAF058-01	1	47	Drive Gear	HAF012-01	1
19	Line Roller Washer	JAF102-01	1	48	Washer - Drive Gear	HAF105-01	1
20	Line Roller Collar	HAF102-01	1	49	Side Cover Assembly	HAF323-02	1
21	Arm Lever	HAF007-02	1	50	Screw - Side Cover	HAF085-02	3
22	Line Roller Screw	EAE108-01	1	51	Handle Assembly	JAF318-01	1
23	Washer - Rotor	JAF110-01	1	52	Line Roller Ball Bearing	EH158-07	1
24	Screw - Clutch Retainer	EAE057-01	3				