QUANTUM® STRATEGY SPINNING

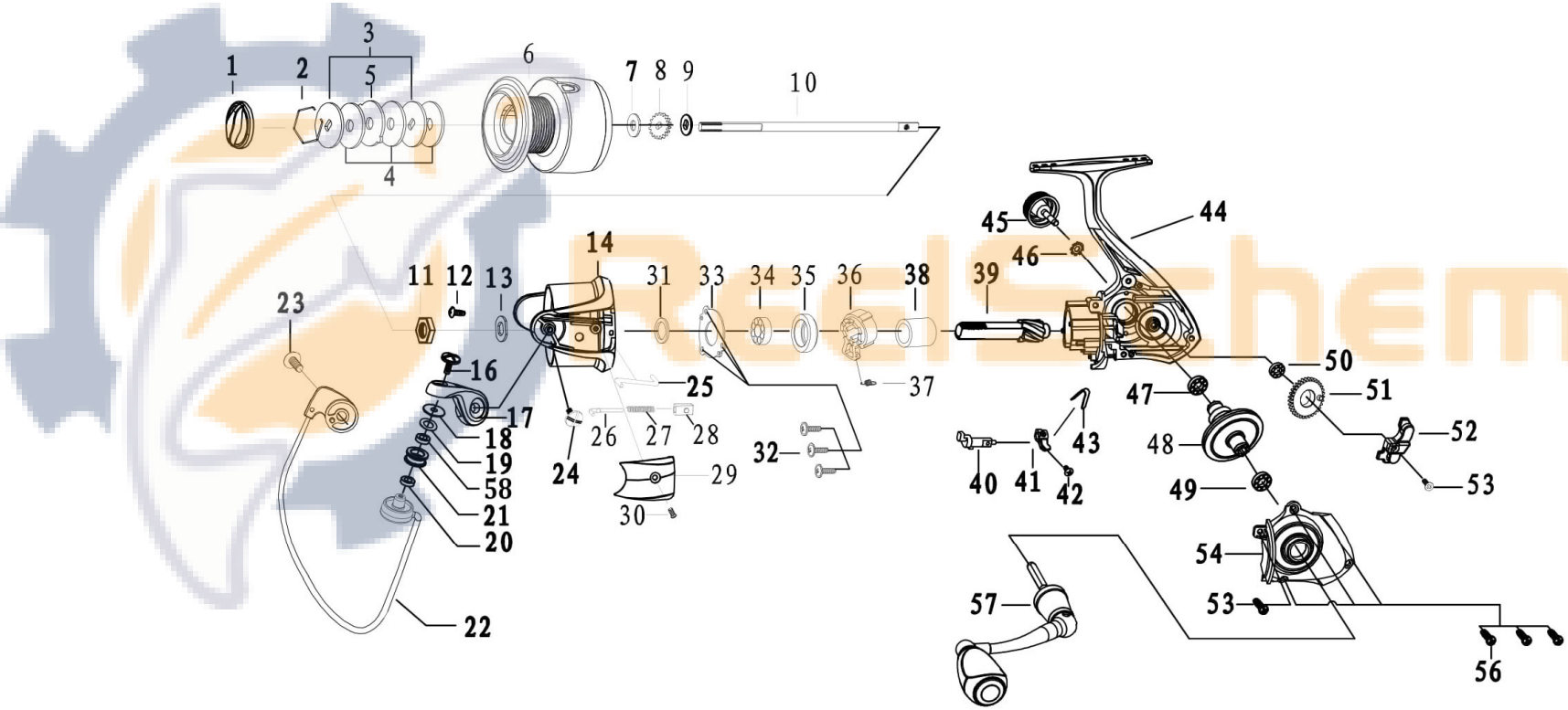

# Quantum SR20A Spinning Reel Parts List

| Key No. | Description | SR20A | QTY | Key No. | Description | SR20A | QTY |
|---|---|---|---|---|---|---|---|
| 1 | Drag Knob Assembly | EAE332-04 | 1 | 31 | Rotor Washer | FAE110-01 | 1 |
| | Spool Unit | FAE420-04 | 1 | 32 | Clutch Retainer Screw | EAE057-01 | 3 |
| | **2** - Spool Retainer | EAE038-01 | 1 | 33 | Clutch Stack Retainer | EAE040-01 | 1 |
| | **3** - Drag Washer "D" | EAE080-01 | 2 | 34 | Pinion Ball bearing | AAA028-01 | 1 |
| | **4** - Drag Washer | EAE033-01 | 3 | 35 | Clutch Bearing Adapter | EAE190-01 | 1 |
| | **5** - Eared Washer | EAE081-01 | 1 | 36 | One Way Clutch Unit | EAE363-01 | 1 |
| | **6** - Spool Assembly | FAE320-04 | 1 | 37 | One Way Clutch Spring | EAE216-01 | 1 |
| 7 | Spool Adjust Washer | EAE030-01 | 1 | 38 | Sleeve | EAE139-01 | 1 |
| 8 | Clicker Gear | EAE037-01 | 1 | 39 | Pinion | EAE011-01 | 1 |
| 9 | Spool Clicker Washer | EAE045-01 | 1 | 40 | Stopper Cam | EAE090-01 | 1 |
| 10 | Main Shaft | EAE015-01 | 1 | 41 | Stopper Lever | EAE059-02 | 1 |
| 11 | Rotor Nut | EAE006-01 | 1 | 42 | Stopper Cam Spring | EAE120-01 | 1 |
| 12 | Rotor Nut Lock Screw | EAE094-01 | 1 | 43 | Stopper Cam Screw | EAE135-02 | 1 |
| 13 | Rotor Fasten Shim | EAE110-01 | 1 | 44 | Body Assembly | EAE301-01 | 1 |
| 14 | Rotor | FAE009-04 | 1 | 45 | Handle Screw Cap | EAE073-01 | 1 |
| 15 | Bail Holder Side Cover | FAE087-04 | 1 | 46 | Toothed Lock washer | EAE075-01 | 1 |
| 16 | Line Roller Screw | EAE108-02 | 1 | 47 | Body Ball bearing | TAA028-01 | 1 |
| 17 | Arm Lever | EAE007-04 | 1 | 48 | Drive Gear | EAE012-01 | 1 |
| 18 | Line Roller Collar | EAE102-01 | 1 | 49 | Side Cover Ball bearing | TW058-09 | 1 |
| 19 | Line Roller Washer | FAE102-01 | 1 | 50 | O/S Gear Ball Bearing | EAE158-01 | 1 |
| 20 | Bushing | EAE157-01 | 1 | 51 | O/S Gear | EAE053-01 | 1 |
| 21 | Line Roller | EAE004-01 | 1 | 52 | O/S Slider | EAE025-01 | 1 |
| 22 | Bail Assembly | FAE347-04 | 1 | 53 | O/S Slider Screw | EAE100-01 | 1 |
| 23 | Arm Lever Screw | EAE042-02 | 1 | 54 | Side Cover Assembly | EAE323-04 | 1 |
| 24 | Bail Holder Screw | EAE042-02 | 1 | 55 | Side Cover Screw | EAE085-01 | 1 |
| 25 | Kick Lever | FAE019-01 | 1 | 56 | Side Cover Screw | FAE085-01 | 3 |
| 26 | Actuator Lever | EAE116-01 | 1 | 57 | Handle Assembly | FAE318-01 | 1 |
| 27 | Actuator Spring | EAE022-01 | 1 | 58 | Line Roller Ball Bearing | CT157-07 | 1 |
| 28 | Actuator | EAE031-01 | 1 | | | | |
| 29 | Arm Lever Side Cover | EAE087-04 | 1 | | | | |
| 30 | Arm Lever Side Cover Screw | EAE077-02 | 1 | | | | |

ReelSchematic