QUANTUM

KVD100S

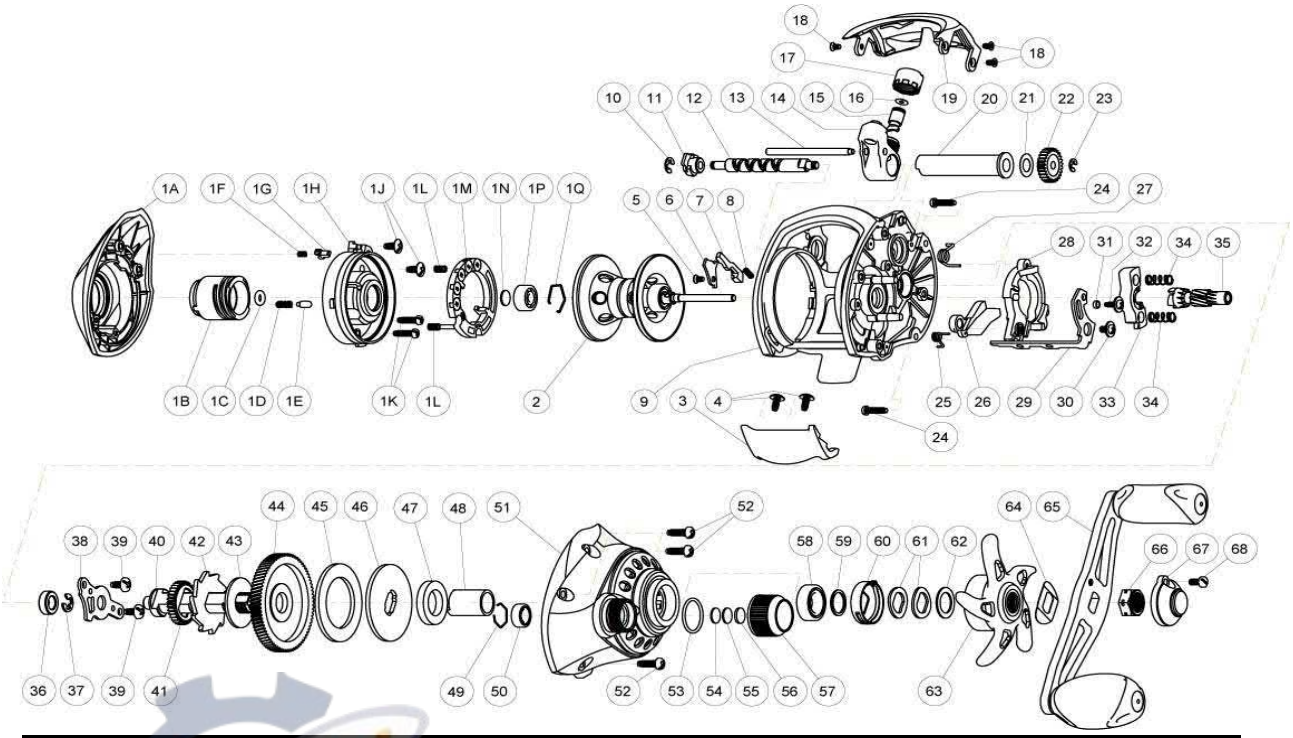

Quantum TEAM KVD - KVD100S Part List							
Key No.	Description	Part No. KVD100S	Qty	Key No.	Description	Part No. KVD100S	Qty
1	Palm Side Cover Kit include	YB4023-02	1	28	Release Slider	LX039-01	1
	1A - Palm Side Cover	YB023-02	1	29	Release Slider Link	LX036-01	1
	1B - Magnet Control Dial	YB026-02	1	30	Screw	CX076-03	1
	1C - Magnet Control Dial Friction Ring	SB105-01	1	31	Release Slider Collar	YB088-01	1
	1D - Magnet Control Dial Click Spring	YW114-01	1	32	Screw	QV076-01	1
	1E - Magnet Control Dial Click Pawl	PW098-01	1	33	Pinion Yoke	PW025-01	1
	1F - Side Cover Locking Pin Spring	KW070-01	1	34	Yoke Spring	GX040-01	2
	1G - Side Cover Locking Pin	SB103-02	1	35	Pinion Gear	LX011-01	1
	1H - Spool Cover	YB051-01	1	36	Crank Shaft Bearing - L	SW017-01	1
	1J - Spool Cover Screw "A"	ZW125-03	2	37	E-Clip	QW120-01	1
	1K - Spool Cover Screw "B"	YB125-01	2	38	Crank Shaft Retainer	LX002-02	1
	1L - Magnet Control Spring	SH049-01	2	39	Crank Shaft Retainer Screw	QV125-01	2
	1M - Magnet Assembly	YB330-01	1	40	Crank Shaft	YW008-05	1
	1N - Spool Tension Shim	QW032-04	1	41	O/S Drive Gear	PW112-01	1
	1P - Spool Shaft Ball Bearing - Palm	QV017-01	1	42	Trip Ratchet	PW083-02	1
	1Q - Clip Ring	HV080-01	3	43	Trip Ratchet Washer	YW111-01	1
2	Spool Assembly	YB321-02	1	44	Drive Gear	LX012-01	1
3	Thumb Bar	LX009-01	1	45	Drag Disc	UX059-01	1
4	Thumb Bar Screw	CW125-01	2	46	Drag Washer	YB045-01	1
5	Side Cover Locking Lever Screw	YB107-01	1	47	Spacer	YB160-01	1
6	Side Cover Locking Lever Retainer	YB056-01	1	48	One Way Clutch Sleeve	YB052-01	1
7	Side Cover Locking Lever	YB119-01	1	49	Spool Tension Knob Ball Bearing Retainer	EB080-01	1
8	Side Cover Locking Lever Spring	KW096-01	1	50	Tension Knob Ball Bearing	SW017-01	1
9	Frame	YB001-02	1	51	Gear Side Cover Assembly	YB324-02	1
10	E-Clip	NX092-01	1	52	Gear Side Cover Screw "A"	WW107-03	3
11	Worm Shaft Bushing	YB067-01	1	53	Spool Tension Knob O-Ring	YB105-01	1
12	Worm Shaft	HV072-01	1	54	Spool Tension Washer	QW032-04	1
13	Stabilizer Bar	YB061-01	1	55	Spool Tension Support Washer	PW032-01	1
14	Line Guide Carrier	DW047-04	1	56	Spool Cushion Washer	EX082-01	1
15	Line Guide Pawl	ZW006-01	1	57	Spool Tension Knob	YB033-01	1
16	Line Guide Pawl Washer	BV036-01	1	58	Crank Shaft Ball Bearing	TW058-03	1
17	Line Guide Carrier Screw	ZW007-01	1	59	Crank Shaft Ball Bearing Washer	TW035-02	1
18	Front Support Screw	YB107-01	3	60	Drag Click Spring Assembly	YX4114-01	1
19	Front Support	YB099-02	1	61	Spring "D" Washer	JX046-01	2
20	Worm Shaft Guide	ZW016-02	1	62	Star Drag Washer	ZW032-01	1
21	O/S Pinion Gear Washer	EX035-01	1	63	Star Drag	EW055-03	1
22	O/S Pinion Gear	PW085-01	1	64	Handle Washer	NX054-01	1
23	E-Clip	NX090-01	1	65	Handle Assembly	ZB318-01	1
24	Gear Side Cover Screw "B"	YB125-01	2	66	Handle Nut	QW003-03	1
25	Kick Lever Spring	SB097-01	1	67	Handle Nut Cap	YB034-02	1
26	Kick Lever	YB077-01	1	68	Handle Nut Cap Screw	DW050-02	1
27	Release Slider Spring	SB104-01	1				