QUANTUM

TRX40F

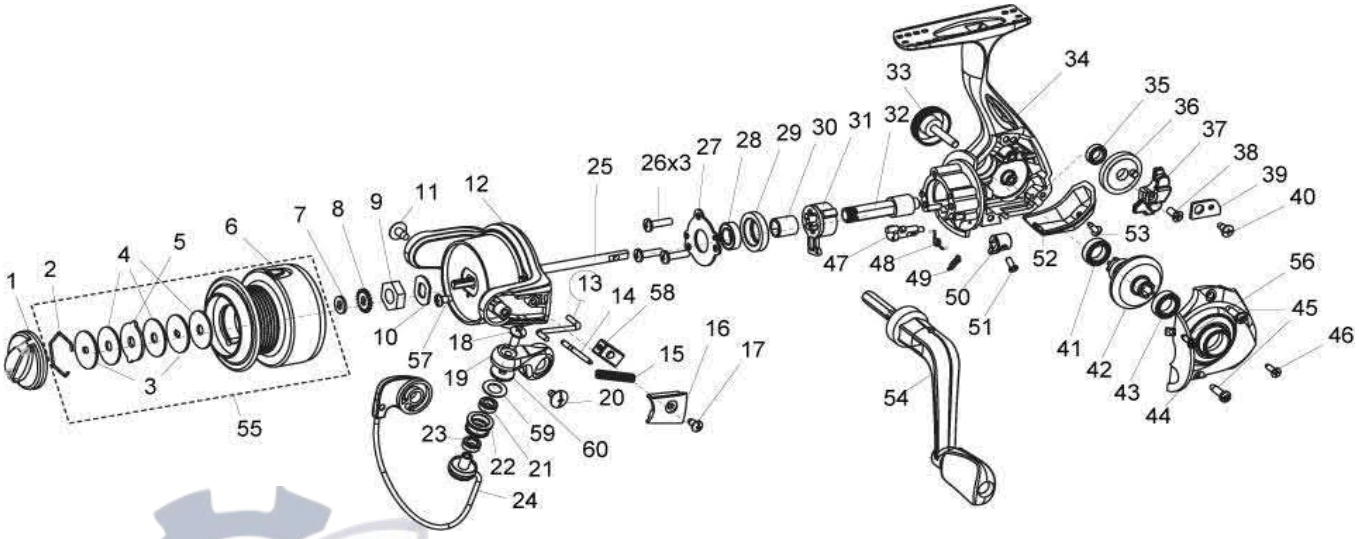

Quantum TRX40F Spinning Reel Part List

Key #	Description	Part No.	Qty.	Key #	Description	Part No.	Qty.
1	DRAG KNOB ASSEMBLY	VU332-01	1	32	PINION GEAR	VU011-01	1
2	DRAG RETAINER	VU038-01	1	33	HANDLE SCREW CAP ASSEMBLY	DQ249-01	1
3	DRAG "D" WASHER	VU080-01	2	34	BODY	VU001-01	1
4	DRAG FRICTION WASHER	JQ030-01	3	35	O/S GEAR BEARING	GU157-01	1
5	DRAG KEY WASHER	JQ031-01	1	36	O/S GEAR	VU053-01	1
7	SPOOL FRICTION WASHER	JG039-01	1	37	O/S SLIDER	VU025-01	1
8	CLICK GEAR	VU037-01	1	38	MAIN SHAFT SCREW	TG100-01	1
9	ROTOR NUT	VU006-01	1	39	SLIDER GUIDE	VU078-01	1
10	ROTOR NUT WASHER	N/A	1	40	SLIDER GUIDE SCREW	VU123-01	1
11	BAIL PIVOT SCREW	VU164-01	1	41	BODY BALL BEARING	TW058-01	1
12	ROTOR	QK009-01	1	42	DRIVE GEAR	VU012-01	1
13	KICK LEVER	QK019-01	1	43	BODY COVER BALL BEARING	TW058-01	1
14	BAIL SPRING SHAFT	QK115-01	1	44	BODY COVER ASSEMBLY	VU023-01	1
15	BAIL SPRING	QK117-01	1	45	BODY COVER SCREW "A"	TG057-01	2
16	ARM LEVER COVER	QK046-01	1	46	BODY COVER SCREW "B"	CU085-01	1
17	ARM LEVER COVER SCREW	QK085-01	1	47	ANTI-REVERSE CAM	VU090-01	1
18	LINE ROLLER SCREW	VU108-01	1	48	ANTI-REVERSE CAM SPRING	VU216-01	1
19	ARM LEVER	QK007-01	1	49	ANTI-REVERSE SPRING	BU089-01	1
20	BAIL PIVOT SCREW	VU164-01	1	50	ANTI-REVERSE SWITCH	VU059-01	1
21	LINE ROLLER BEARING / BUSHING	CT157-01	1	51	ANTI-REVERSE SWITCH SCREW	TG135-01	1
22	LINE ROLLER	QK004-01	1	52	BODY REAR COVER	VU250-01	1
23	LINE ROLLER BEARING	CT157-01	1	53	BODY REAR COVER SCREW	CU168-01	1
24	BAIL ASSEMBLY	QK347-01	1	54	HANDLE ASSEMBLY	LAB318-01	1
25	MAIN SHAFT	QK015-01	1	55	SPOOL ASSEMBLY	LAB321-01	1
26	CLUTCH RETAINER SCREW	UG094-01	3	56	BODY COVER SCREW "C"	TG057-01	1
27	CLUTCH RETAINER	VU060-01	1	57	ROTOR NUT LOCK SCREW	TG094-01	1
28	PINION BEARING	TW058-01	1	58	BAIL SPRING SHAFT HOLDER	VU116-01	1
29	PINION BEARING ADAPTER	VU190-01	1	59	LINE ROLLER FRICTION WASHER	VU102-01	1
30	CLUTCH SLEEVE	VU139-01	1	60	LINE ROLLER WASHER	VU016-01	1
31	CLUTCH ASSEMBLY	VU063-01	1				

ReelSchematic