SHIMANO

EXSENCE S A-RB

EXS-4000MXG

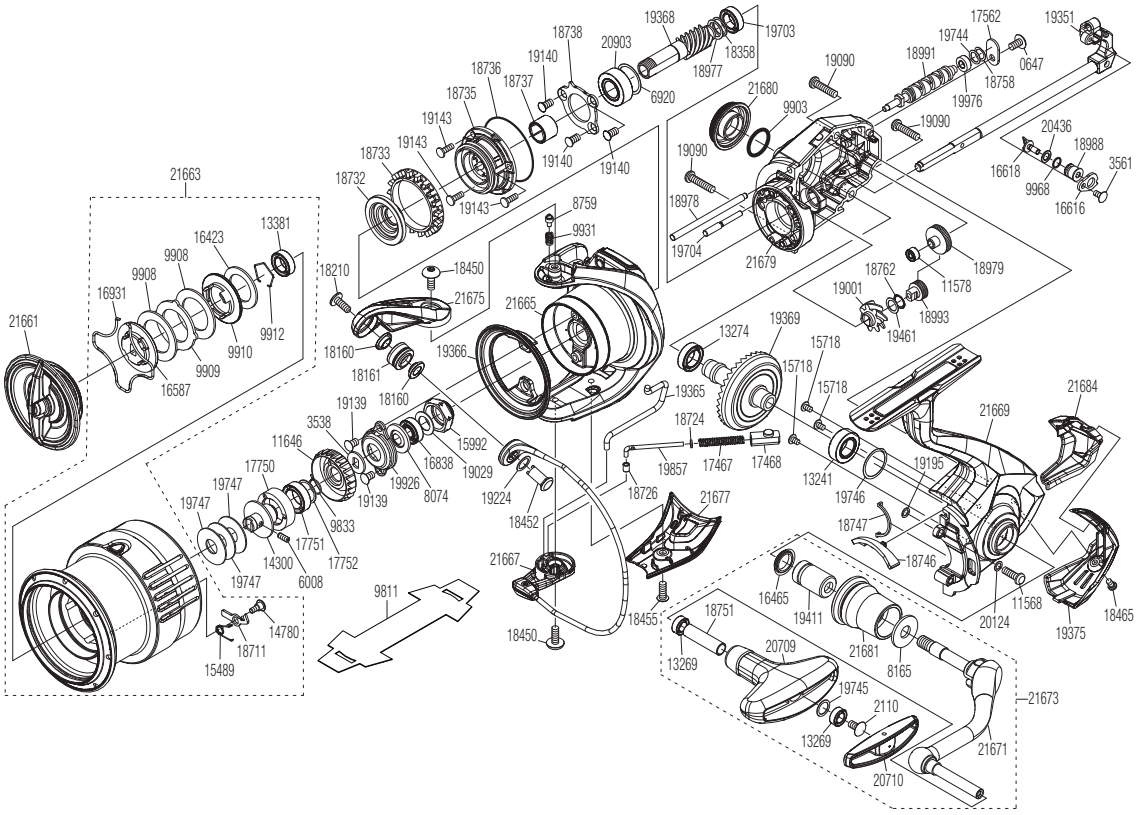

Please note that the number of adjusting washers may not be the same as shown in the exploded views. (Adjustment will vary with each individual product.)

(51SF50H042X) RD 18735 Roller Clutch Assembly please send the equipment out to after-sales service for replacement of the roller clutch assembly.

Part No.	Description	Part No.	Description	Part No.	Description
RD 0647	Screw	RD18160	Bearing Spacer	RD19411	Handle Shaft Cover B
RD 2110	Screw	RD18161	Line Roller Set	RD19461	Washer
RD 3538	Spool Support	RD18210	Screw	RD19703	Ball Bearing
RD 3561	Screw	RD18358	Spacer	RD19704	Idle Gear Shaft
RD 6008	Set Screw	RD18450	Screw	RD19744	Washer
RD 6920	Washer	RD18452	Line Roller Support	RD19745	Washer
RD 8074	Bearing Water Proof	RD18455	Screw	RD19746	Washer
RD 8165	Washer	RD18465	Screw	RD19747	Spool Washer
RD 8759	Click Pin	RD18711	Drag Click	RD19857	Bail Spring Guide A
RD 9833	Ratchet Spring	RD18724	Spring Guide A Support Collar	RD19926	Nut Lock Plate
RD 9903	O Ring	RD18726	Bail Spring Guide A Bush	RD19976	Bushing
RD 9908	Drag Washer A	RD18732	Rotor Ring	RD20124	Washer
RD 9909	Eared Washer	RD18733	Friction Ring	RD20436	Washer
RD 9910	Key Washer A	RD18735	Roller Clutch Assembly	RD20709	Handle Knob
RD 9912	Bearing Retainer	RD18736	Roller Clutch Case Seal	RD20710	Handle Knob Seal
RD 9931	Click Spring	RD18737	Roller Clutch Inner	RD20903	Ball Bearing
RD 9968	O Ring	RD18738	Bearing Retainer	RD21661	Drag Knob Assembly
RD11568	Screw	RD18746	Bail Trip Strike	RD21663	Spool Assembly
RD11578	Ball Bearing	RD18747	Flange Water Proof	RD21665	Rotor Assembly
RD11646	Drag Click Ratchet	RD18751	Handle Knob Shaft Pipe	RD21667	Bail Assembly
RD13241	Ball Bearing	RD18758	Washer	RD21669	Side Cover Assembly
RD13269	Ball Bearing	RD18762	Washer	RD21671	Handle Shank Assembly
RD13274	Ball Bearing	RD18977	Washer	RD21673	Handle Assembly
RD13381	Ball Bearing	RD18978	Oscillating Guide A	RD21675	Bail Arm
RD14300	Spool Bearing Bushing	RD18979	Idle Gear	RD21677	Bail Hold Support Guard
RD14780	Screw	RD18988	Oscillating Slider Bushing	RD21679	Body
RD15489	Drag Click Spring	RD18991	Worm Shaft	RD21680	Handle Screw Cap
RD15718	Screw	RD18993	Idle Gear (Small)	RD21681	Handle Shaft Cover
RD15992	Rotor Nut	RD19001	Idle Gear (Large)	RD21684	Rear Shield
RD16423	Drag Washer B	RD19029	Washer		
RD16465	Handle Shaft Seal	RD19090	Screw		
RD16587	Key Washer B	RD19139	Screw		
RD16616	Oscillating Pawl Cover	RD19140	Screw		
RD16618	Oscillating Pawl	RD19143	Screw		
RD16838	Main Shaft Spacer Assembly	RD19195	Washer		
RD16931	Retainer	RD19224	Washer		
RD17467	Bail Spring	RD19351	Main Shaft Assembly		
RD17468	Bail Spring Guide B	RD19365	Bail Trip Lever		
RD17562	Worm Shaft Retainer	RD19366	Rotor Brim		
RD17750	Bearing Spacer	RD19368	Pinion Gear		
RD17751	Ball Bearing	RD19369	Drive Gear		
RD17752	Washer	RD19375	Rear Protector	RD 9811	Reel Seat Spacer (accessory)