SHIMANO

SUPER

SUP-2500GTRD

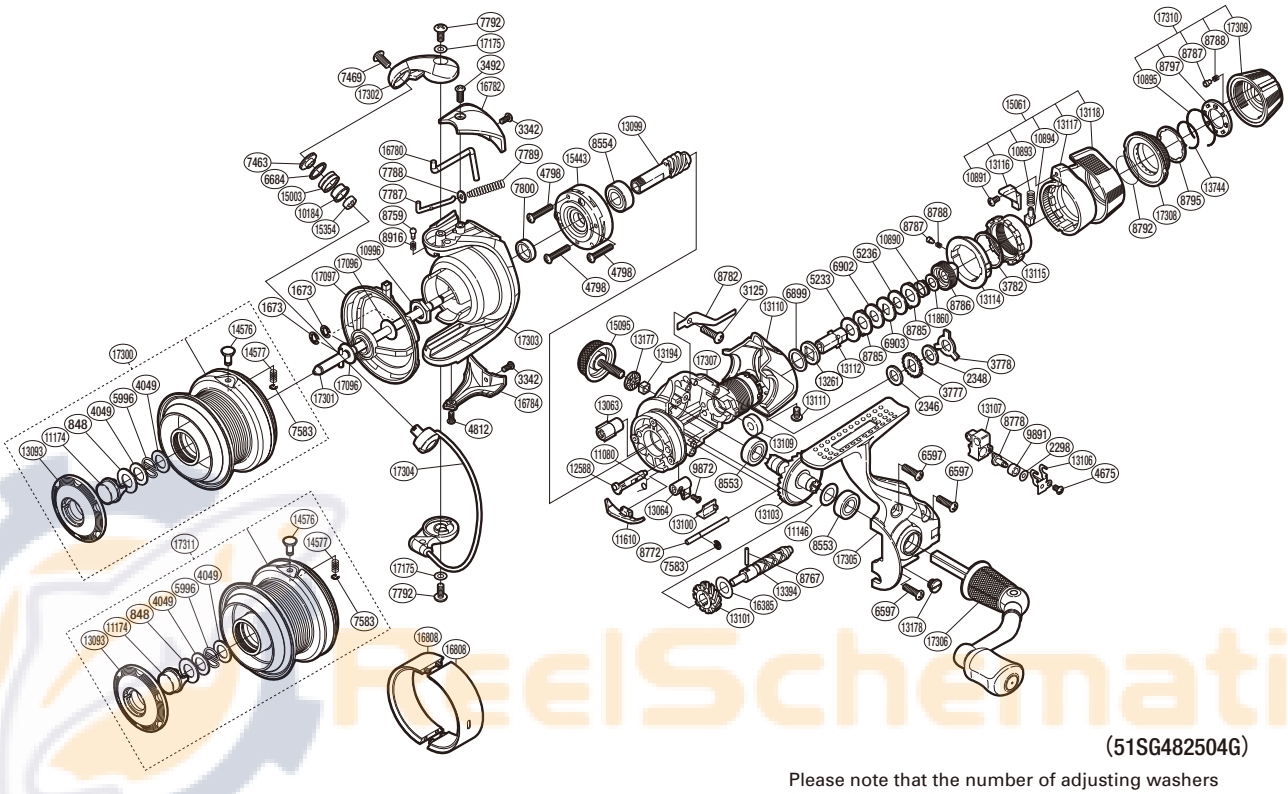

(51SG482504G)

Please note that the number of adjusting washers may not be the same as shown in the exploded views. (Adjustment will vary with each individual product.)

Part No.	Description	Part No.	Description	Part No.	Description
RD 0848	Washer	RD 8785	Eared Washer	RD13116	Fightin Lever Inner B
RD 1673	E Lock	RD 8786	Pressure Screw	RD13117	Fightin Lever Inner A
RD 2298	Spacer	RD 8787	Click Pin	RD13118	Fightin Lever Outer
RD 2346	Drag Washer	RD 8788	Click Spring	RD13177	Handle Screw Cap Spacer
RD 2348	Drag Washer	RD 8792	Drag Knob Friction Ring	RD13178	Oil Cap
RD 3125	Screw	RD 8795	Drag Knob Washer	RD13194	Handle Screw Lock
RD 3342	Screw	RD 8797	Click Plate	RD13261	Drag Shaft B
RD 3492	Screw	RD 8916	Click Spring	RD13394	Worm Shaft
RD 3777	Click Gear	RD 9872	Screw	RD13744	Drag Knob Retainer
RD 3778	Eared Washer	RD 9891	Oscillating Slider Bushing	RD14576	Line Clip
RD 3782	Fightin Pressure Screw Washer	RD10184	Line Roller Bushing	RD14577	Line Clip Spring
RD 4049	Washer	RD10890	Drag Coil Spring	RD15003	Line Roller
RD 4675	Screw	RD10891	Screw	RD15061	Fightin Lever Assembly
RD 4798	Screw	RD10893	Position Pin Spring	RD15095	Handle Screw Cap
RD 4812	Screw	RD10894	Lever Position Pin	RD15354	Line Roller Collar
RD 5233	Drag Washer	RD10895	Click Plate Retainer	RD15443	Roller Clutch Assembly
RD 5236	Drag Washer	RD10996	Rotor Nut	RD16385	Washer
RD 5996	Locking Spring	RD11080	Anti-Reverse Cam Spring	RD16780	Bail Trip Lever
RD 6597	Screw	RD11146	Washer	RD16782	Bail Spring Cover
RD 6684	Line Roller Spacer	RD11174	Push Button	RD16784	Bail Hold Support Guard
RD 6899	Drag Washer	RD11610	Bail Trip Strike	RD17096	Washer
RD 6902	Drag Washer	RD11860	Washer	RD17097	Line Safety Guard
RD 6903	Key Washer	RD12588	Anti-Reverse Cam	RD17175	Washer
RD 7463	Line Roller Washer	RD13063	Worm Bushing	RD17300	Spool Assembly
RD 7469	Screw	RD13064	Anti-Reverse Lever	RD17301	Main Shaft
RD 7583	E Lock	RD13093	Push Button Collar	RD17302	Bail Arm
RD 7787	Bail Spring Guide A	RD13099	Pinion Gear	RD17303	Rotor
RD 7788	Spring Guide (A) Support	RD13100	Anti-Reverse Lever Cover	RD17304	Bail Assembly
RD 7789	Bail Spring	RD13101	Idle Gear	RD17305	Side Cover
RD 7792	Screw	RD13103	Drive Gear	RD17306	Handle Assembly
RD 7800	Rotor Ring	RD13106	Oscillating Slider Retainer	RD17307	Body
RD 8553	Ball Bearing	RD13107	Oscillating Slider	RD17308	Drag Programmer B
RD 8554	Ball Bearing	RD13109	Drag Shaft C	RD17309	Drag Programmer A
RD 8759	Click Pin	RD13110	Rear Protector	RD17310	Drag Programmer Assembly
RD 8767	Worm Shaft Pin	RD13111	Screw		
RD 8772	Oscillating Guide	RD13112	Drag Shaft A	RD17311	Spare Spool Assembly
RD 8778	Oscillating Pawl	RD13114	Lever Click Gear		
RD 8782	Drag Click	RD13115	Fightin Pressure Screw	RD16808	Spool Economizer 1000 (accessory)

(150417)