SHIMANO

TORIUM SA-RB

TOR40HGA

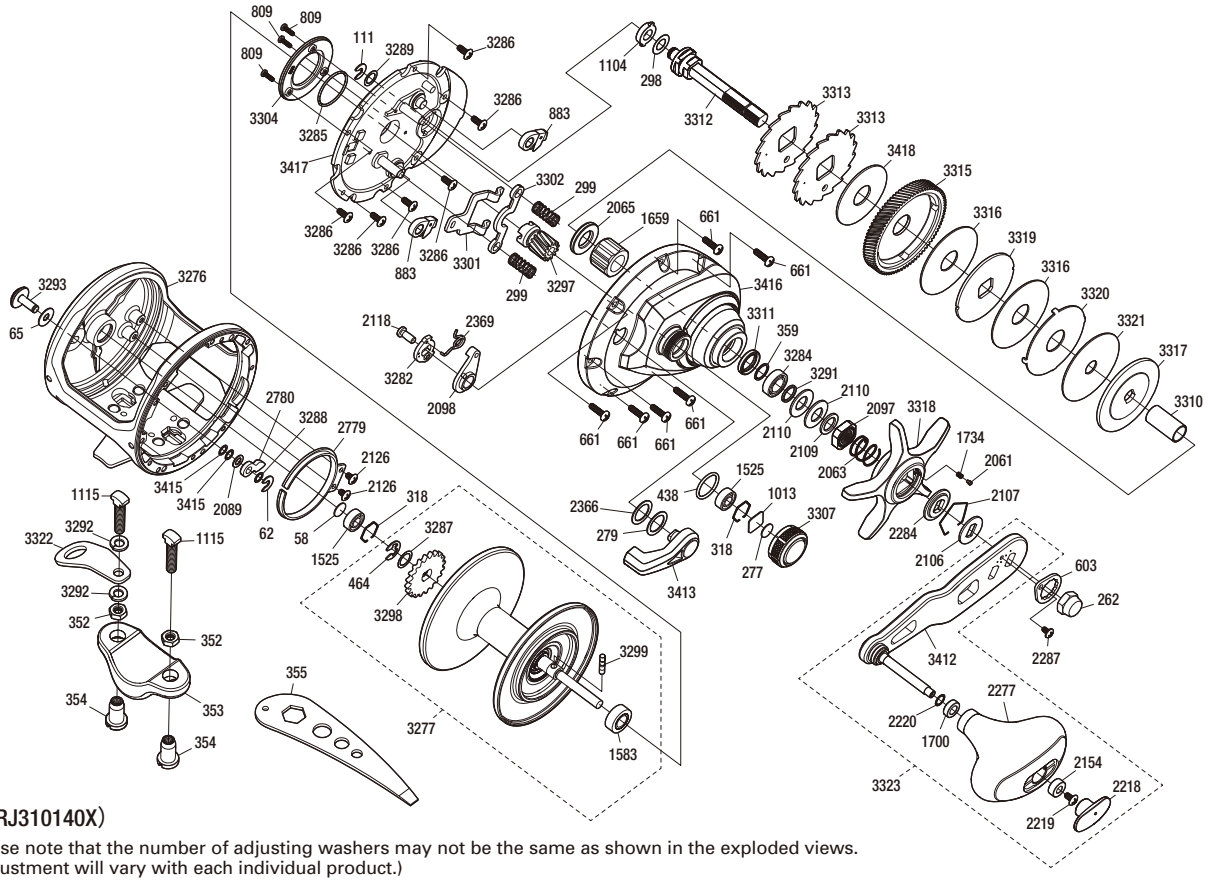

(51RJ310140X)

Please note that the number of adjusting washers may not be the same as shown in the exploded views.
(Adjustment will vary with each individual product.)

Part No.	Description	Part No.	Description	Part No.	Description
TGT0058	Spacer B	TGT2107	Click Plate Retainer	TGT3302	Yoke
TGT0062	E Lock	TGT2109	Star Drag Spacer	TGT3304	Drainage Plate
TGT0065	Washer	TGT2110	Coned Disc Spring 8h	TGT3307	Cast Control Cap
TGT0111	E Lock	TGT2118	Screw	TGT3310	Roller Clutch Inner Tube
TGT0262	Handle Nut	TGT2126	Screw	TGT3311	Roller Clutch Water Proof
TGT0277	Cast Control Spacer B	TGT2154	Bushing	TGT3312	Drive Shaft
TGT0279	Washer	TGT2218	Handle Knob Seal	TGT3313	Anti-reverse Ratchet
TGT0298	Washer	TGT2219	Screw	TGT3315	Drive Gear
TGT0299	Yoke Spring	TGT2220	Washer	TGT3316	Drag Washer B
TGT0318	Bearing Retainer	TGT2277	Handle Knob	TGT3317	Key Washer
TGT0359	Washer	TGT2284	Star Drag Click Plate	TGT3318	Star Drag
TGT0438	O Ring	TGT2287	Screw	TGT3319	Drag Washer C
TGT0464	E Lock	TGT2366	Washer	TGT3320	Eared Washer E
TGT0603	Handle Nut Plate	TGT2369	Clutch Spring	TGT3321	Drag Washer F
TGT0661	Screw	TGT2779	Click Spring	TGT3323	Handle Assembly
TGT0809	Screw	TGT2780	Click Pawl	TGT3412	Handle Shank Assembly
TGT0883	Anti-reverse Pawl	TGT3276	Frame Assembly	TGT3413	Clutch Lever
TGT1013	Spool Tension Spacer	TGT3277	Spool Assembly	TGT3415	Washer
TGT1104	Bushing	TGT3282	Clutch Cam	TGT3416	Right Side Plate
TGT1525	Ball Bearing	TGT3284	Ball Bearing	TGT3417	Left Side Plate Set Assembly
TGT1583	Ball Bearing	TGT3285	O Ring	TGT3418	Drag Washer A
TGT1659	Roller Clutch Bearing	TGT3286	Screw		
TGT1700	Bushing	TGT3287	Washer	TGT0352	Rod Clamp Nut B
TGT1734	Click Spring	TGT3288	Washer	TGT0353	Rod Clamp
TGT2061	Click Pin B	TGT3289	Washer	TGT0354	Rod Clamp Nut A
TGT2063	Star Drag Spring	TGT3291	Washer	TGT1115	Screw
TGT2065	Roller Clutch Water Proof	TGT3293	Click Button	TGT3292	Washer
TGT2089	Washer	TGT3297	Pinion Gear	TGT3322	Hook Keeper
TGT2097	Star Drag Nut	TGT3298	Click Gear		
TGT2098	Eccentric Cam Bushing	TGT3299	Spool Clutch Pin		
TGT2106	Drive Shaft Shield	TGT3301	Yoke Plate	TGT0355	Wrench (Accessory)