www.reelschematic.com

GLADDING
South Bend Tackle Co., Inc.
Division of GLADDING Corporation

3–000–016
CASTING REEL

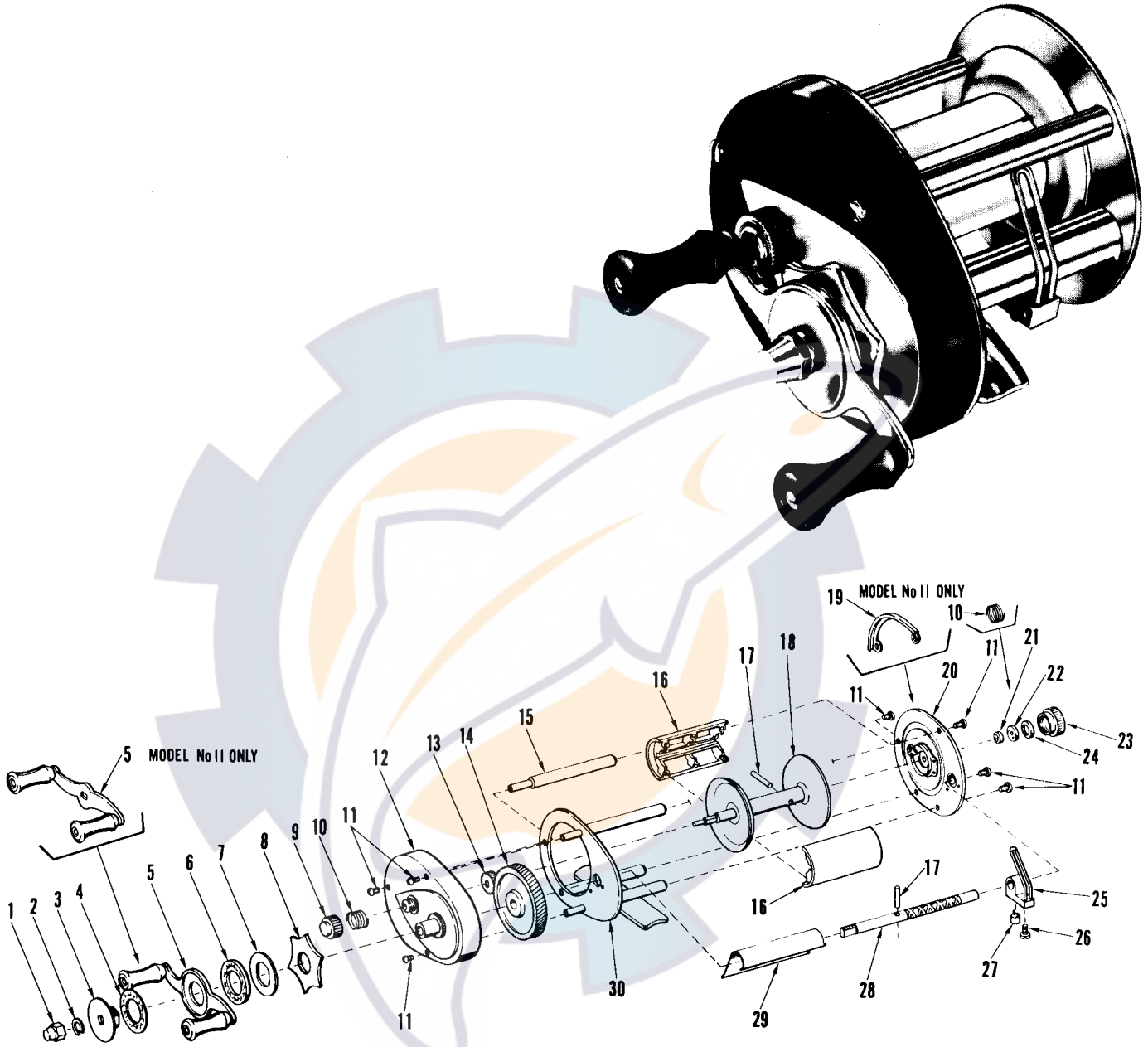

Detail No.	Part Name	Part No.	Price
1	Crank Nut	B6172K	.25
2	Lock Washer	E6154K	.10
3	Crank Drag Assembly	B8065KB	3.25
9	Spool Cap	B1287K	.40
10	Tension Spring	E2568CAI	.10
11	Pillar Screws	E6168K	.10
12	Head Cap Assembly	A9076BJ	4.00
13	Pinion	N8541	.30
14	Drive Gear	N8540	1.25
15	Side Pillar	B9507K	.35
16	Spool Arbor (2 halves)	CY3081	.55
17	Arbor Pin	NE1391	.10

Detail No.	Part Name	Part No.	Price
18	Spool Assembly	NE3079NJ	1.60
20	Tail Plate Assembly	B9080K	5.05
21	Spool Bushing (Tail)	B7055	.25
22	Friction Grip	PB1392	.15
23	Spool Cap	B1394K	.45
24	Bearing Plate	N1395	.20
25	Line Guide	E1273	.05
26	Carriage Block Screw	B6157	.10
27	Carriage Pawl	E1274N	.20
28	Carriage Screw	B6230K	.90
29	Line Protector	B1276K	.45
30	Frame Assembly	A4084K	5.00