www.reelschematic.com

ZEBCO 33CL

CLASSIC®

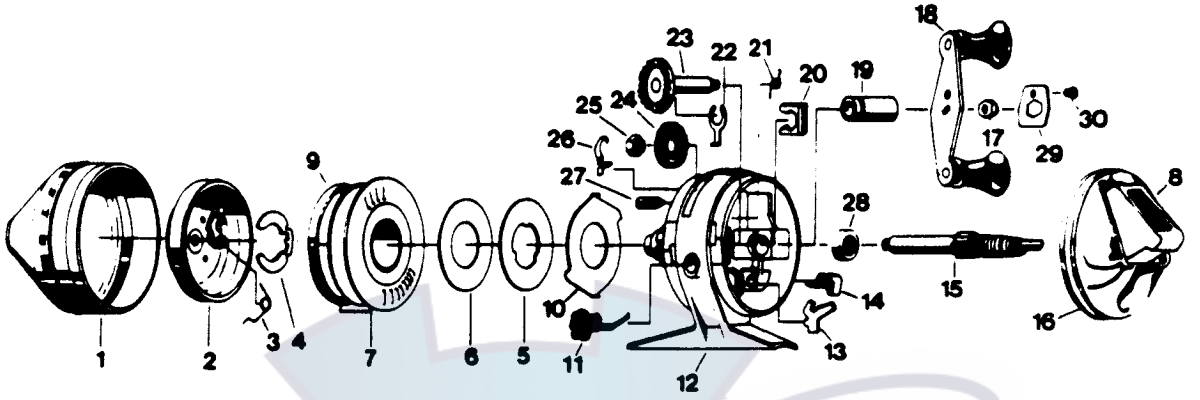

Key No.	Part No.	Description
1	VY324	Front Cover
2	RY310-1	Spinnerhead Assy.
3	RY049	Spring - Pickup Arm
4	RY034-1	Spool Retainer Clip
5	CJ040-1	Spool Washer (Metal)
6	CJ108-1	Flat Washer
7	RY021-1	Spool (Empty)
7	RY321-10H	Wound Spool 10# Mono H.P.
8	VY309	Thumb Stop S/A
9	RY036-1	Spool Lip
10	RY027-1	Clutch Ring
11	RY014	Bait Click
12	VY301-3	Body S/A Warranty
13	RY060-1	Anti-Reverse Pawl
14	RY002	Anti-Reverse Knob
15	RY315-1	Center Shaft

Key No.	Part No.	Description
16	VY323	Back Cover S/A
17	VY003	Crank Nut
18	KZ318-6	Crank Handle S/A
19	RY026-1	Crank Bearing
20	RY029-1	Bearing Retainer Clip
21	RY064-1	Drag Adjustment Spring
22	JY061	Pawl Adaptor
23	RY308	Crank Shaft Assy.
24	RY332-2	Drag Wheel Assy.
25	RY077-1	Hex Nut
26	RY033	Ratchet Spring
27	BJ054-2	Clutch Screw
28	RY030	Ball Bearing
29	VY056	Nut Lock
30	VY057	Screw

August, 1988, new revisions of both RY321-10Z and RY036-1 require using the two parts as a set. They do not work separately with a previous revision.

PLEASE ORDER BY PART NUMBER

Zebco Division Brunswick Corporation, Box 270, Tulsa, OK 74101 USA 918-836-5581

BRUNSWICK