www.reelschematic.com

ZEBCO 606 (1986 Model)

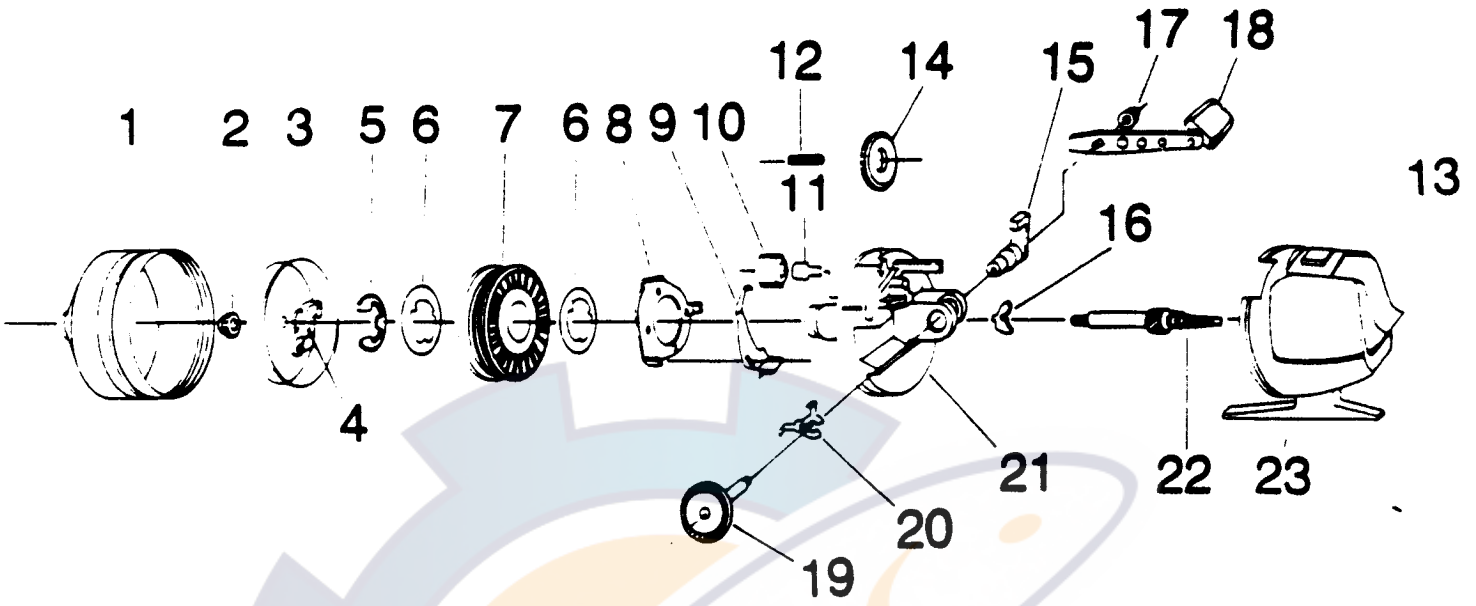

KEY NO.	PART NO.	DESCRIPTION	PRICE
1	JY324-6	FRONT COVER S/A	2.59
3	JY310	SPINNERHEAD	4.64
4	JY049	PICKUP PIN ASM SPRING	.41
5	JY034	SPOOL CLIP	.41
6	NY040	SPOOL WASHER	.77
7	JY021	SPOOL	2.00
7	JY321-8P	WND SPOOL 8# LINE	4.87
8	AE027	CLUTCH RING	1.03
9	RY033	RATCHET SPRING	.39
10	AE169	PISTON WITH SPRING	.63
11	AE168	DUAL DRAG CLICK SPRING	.34
12	BJ054-2	CLUTCH SCREW	.62
13	SY009	THUMBSTOP	.75
14	RY332-1	DRAG ADJ. WHEEL S/A	.77
15	AE026	DRAG LEVER	2.30
16	JY060	ANTI-REVERSE PAWL	.41
17	AZ003	CRANK NUT	.52
18	SY318	CRANK HANDLE S/A	2.41
19	JY308	CRANK GEAR SUB-ASSEMBLY	2.83
20	SY061	ANTI-REV. PAWL ACTUATOR	.58
21	AE301-2	1220N/606 BODY S/A	3.73
22	WY315-2	CENTER SHAFT S/A	4.02
23	SY323	BACK COVER S/A	3.73

Prices subject to change without notice. Prices do not include postage and handling.

PLEASE ORDER BY PART NUMBER