www.reelschematic.com

ZEBCO 733 HAWG

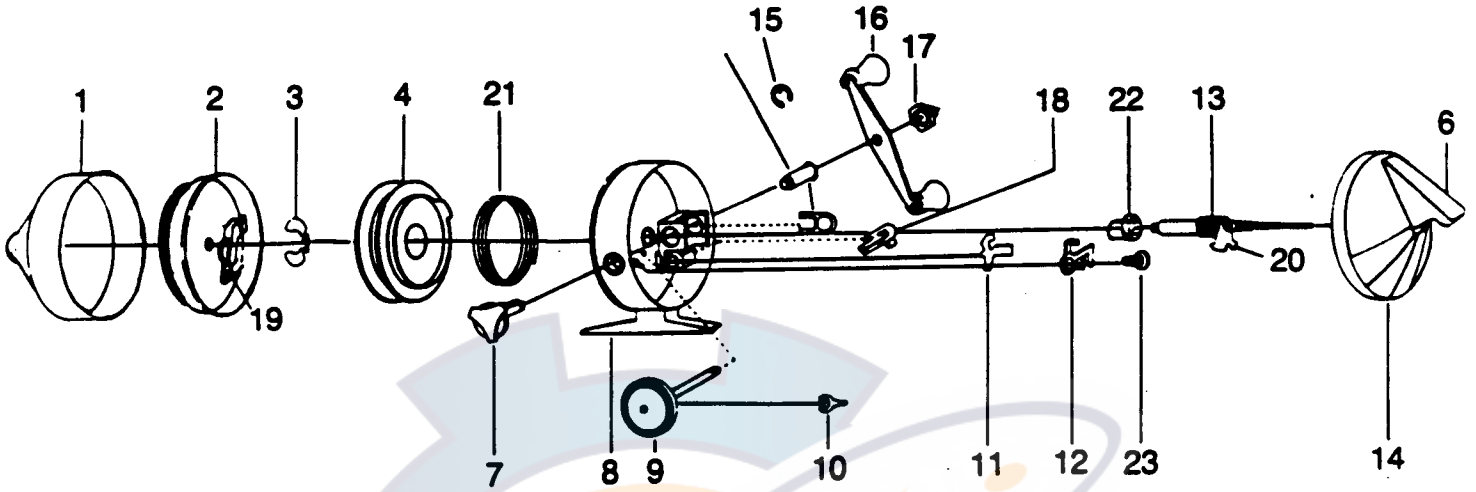

Key No.	Part No.	Description	Price
1	KZ324-2	FRONT COVER	5.90
2	KZ310	SPINNER HEAD S/A	6.45
3	RY034-1	SPOOL RETAINER CLIP	.44
4	GE021	SPOOL	3.38
4	GE321-20H	SPOOL WOUND 20# MONO HP	6.45
5	KY026-5	CRANK BUSHING	2.83
6	GE309	THUMBSTOP S/A	1.36
7	KZ019	BAIT ALERT KNB	.49
8	KZ301-2	BODY S/A	9.64
9	KY308-1	CRANK SHAFT S/A	3.20
10	JY061	PAWL ACTUATOR	.44
11	KZ060	ACTUATOR PAWL	.56
12	KZ014	BAIT CLICKER	.68
13	KZ315	CENTER SHAFT S/A	3.80
14	KZ323-2	BACKCOVER/THUMBSTOP S/A	5.83
15	JY121	RETAINER CLIP	.38
16	KZ318-3	CRANK HANDLE S/A	3.01
17	AZ003	CRANK NUT	.56
18	RY002	ANTI-REVERSE KNOB	.74
19	JY049	PICKUP PIN ARM SPRING	.44
20	KZ065	ACTUATOR	.68
21	GE108	SPOOL SPRING	.49
22	GE017	CENTER BEARING	1.05
23	KZ086	DRIVE STUD	.36

Prices subject to change without notice. Prices do not include postage and handling.

PLEASE ORDER BY PART NUMBER

Rev. 5/93

Zebco Division Brunswick Corporation, Box 270, Tulsa, OK 74101 USA 918-836-5581

BRUNSWICK