www.reelschematic.com

ZEBCO 808 (1986 Model)

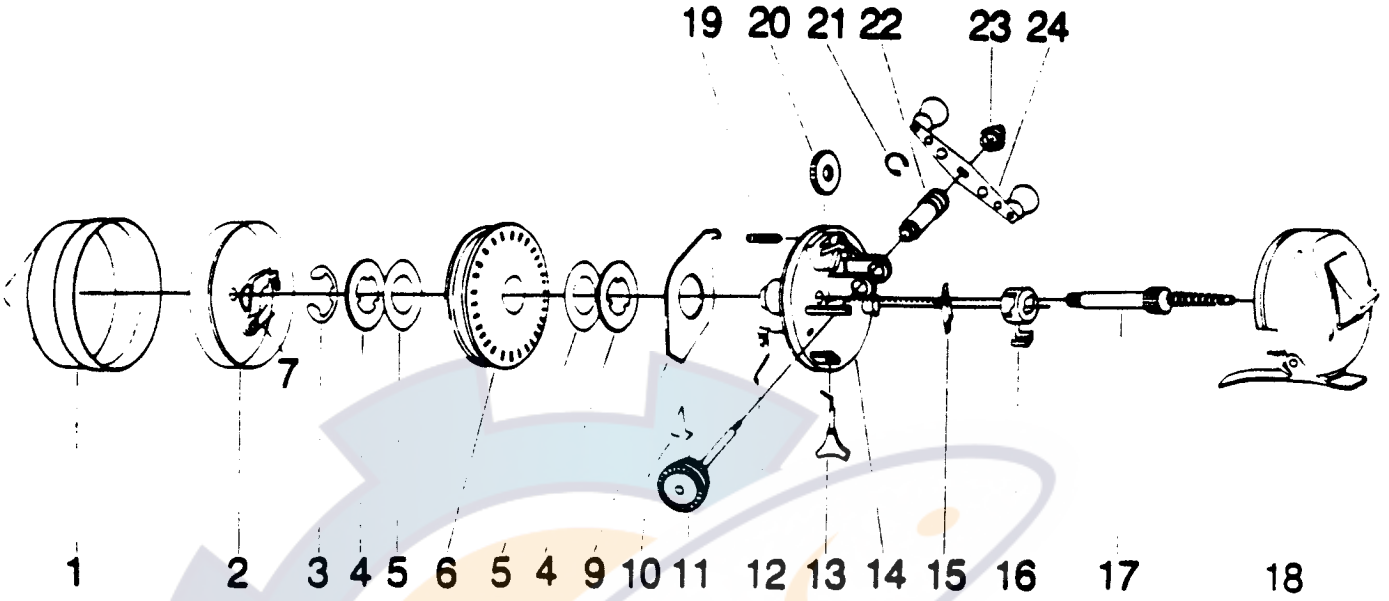

KEY NO.	PART NO.	DESCRIPTION	PRICE
1	EE324-1	FRONT COVER S/A	3.73
2	EE310-1	SPINNERHEAD ASSY.	6.03
3	GZ034-1	SPOOL RETAINER CLIP	.52
4	CJ040-1	SPOOL WASHER (METAL)	.88
5	EE108	SPOOL WASHER	.34
6	EE021	SPOOL	3.90
6	EE321-20M	WOUND SPOOL-MONO 20#HI PR	6.02
6	EE321-90B	WOUND SPOOL/90# BRAIDED	6.65
7	PZ049	PICK-UP PIN SPRING	.39
8	PY009	THUMB STOP	.98
9	EE027	CLUTCH RING	2.30
10	EE052	ANTI-REVERSE DRAG	.36
11	EE308-2	CRANK SHAFT S/A	4.47
12	RY033	RATCHET SPRING	.39
13	EE014	BAIT CLICKER	1.27
14	EE301	808/888 BODY S/A	4.71
15	EE063	ANTI-REVERSE PAWL	.46
16	EE002	A/R ACTUATOR	.63
17	EE315	CENTER SHAFT S/A	3.44
18	EE323-1	BACK COVER S/A	5.44
19	EE054	CLUTCH SCREW	.69
20	EE032	CLUTCH WHEEL	2.00
21	EE121	RETAINER CLIP	.46
22	EE026	CRANK SHAFT BUSHING	1.43
23	QZ003	CRANK NUT	.67
24	ME318-1	CRANK HANDLE S/A	5.36

Prices subject to change without notice. Prices do not include postage and handling.

PLEASE ORDER BY PART NUMBER

Rev. 11/90

Zebco Division Brunswick Corporation, Box 270, Tulsa, OK 74101 USA 918-836-5581

BRUNSWICK