MODEL SBL50

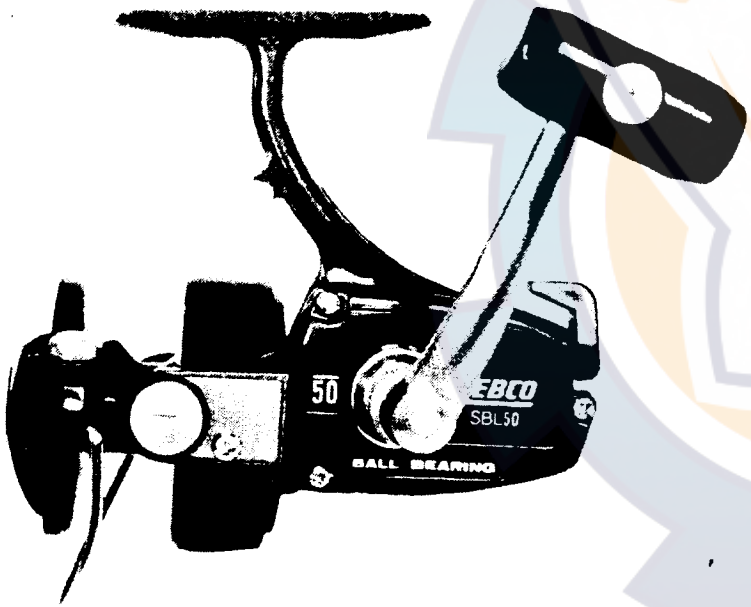

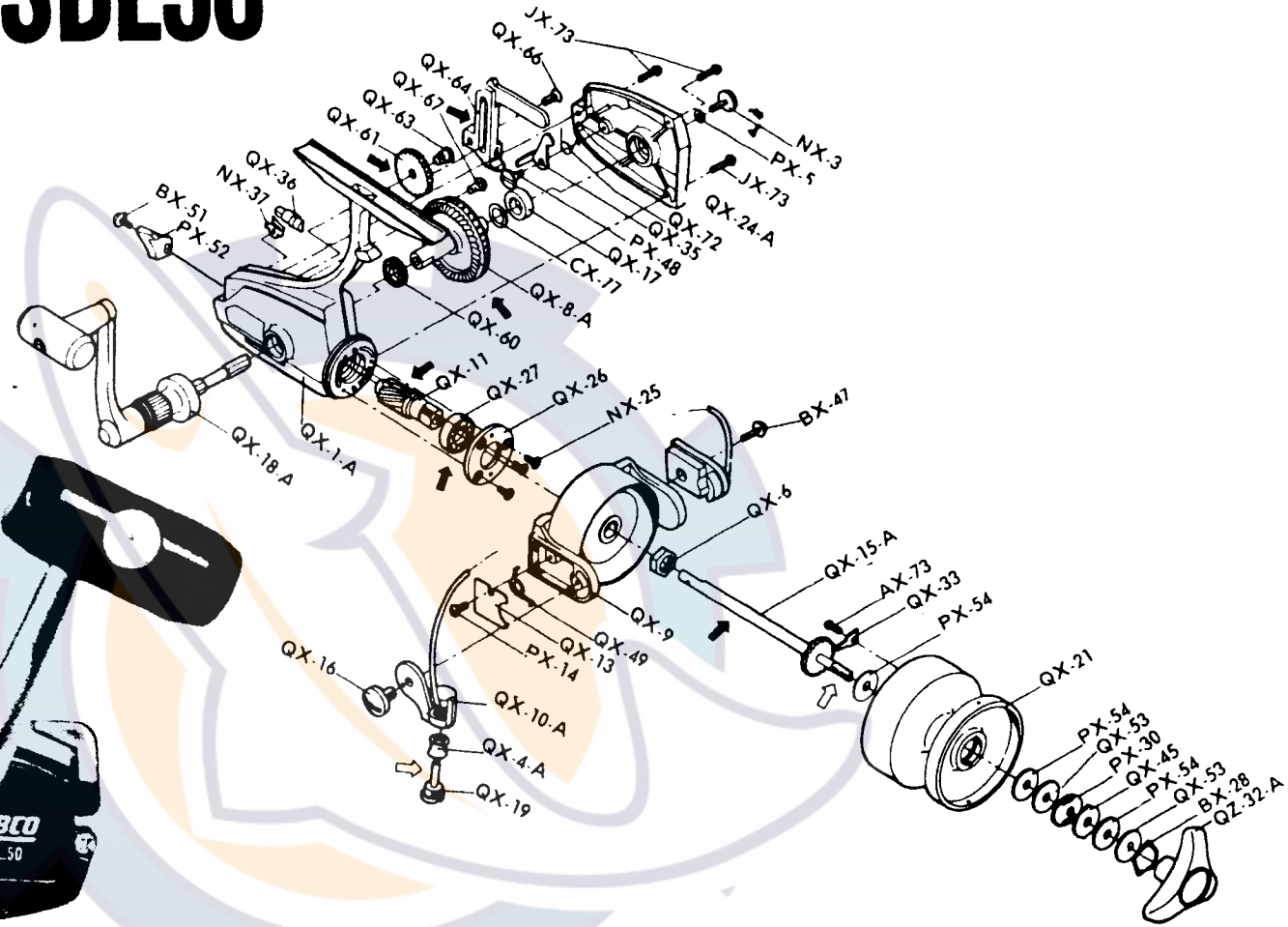

www.reelschematic.com