MODEL XBL45

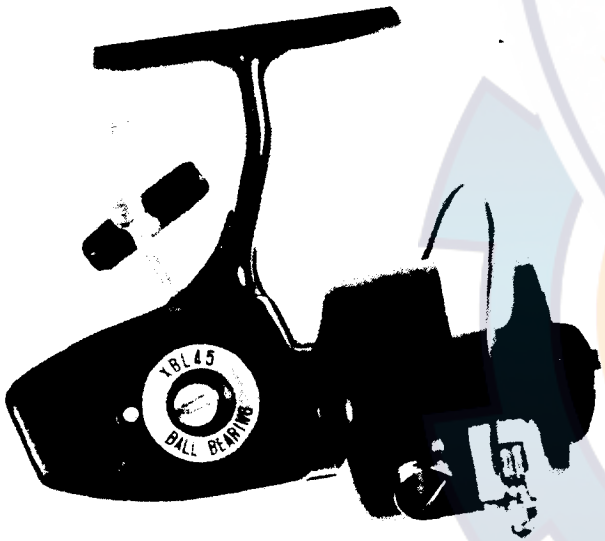

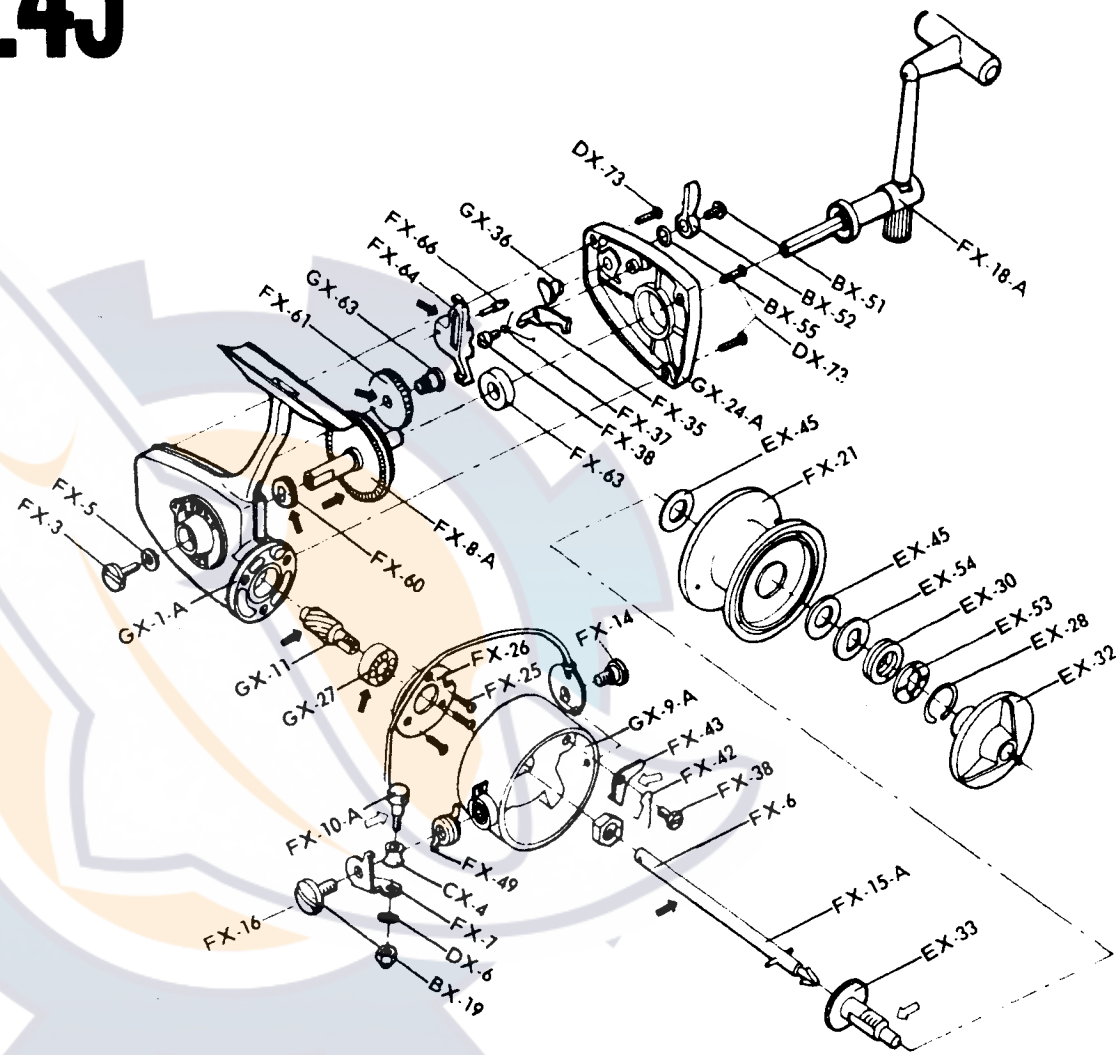

www.reelschematic.com