MODEL XR11

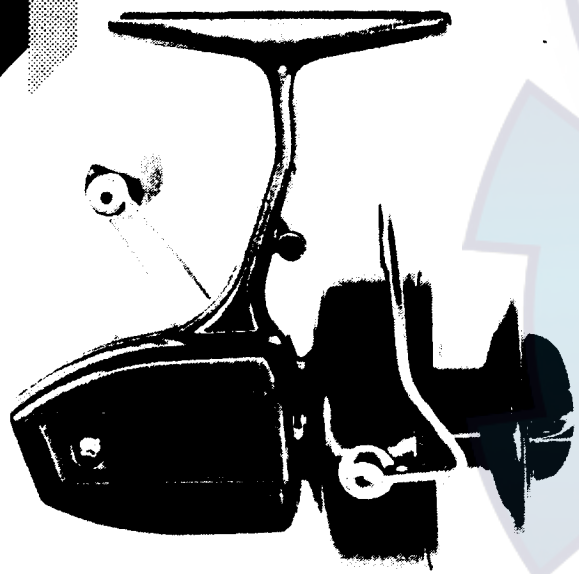

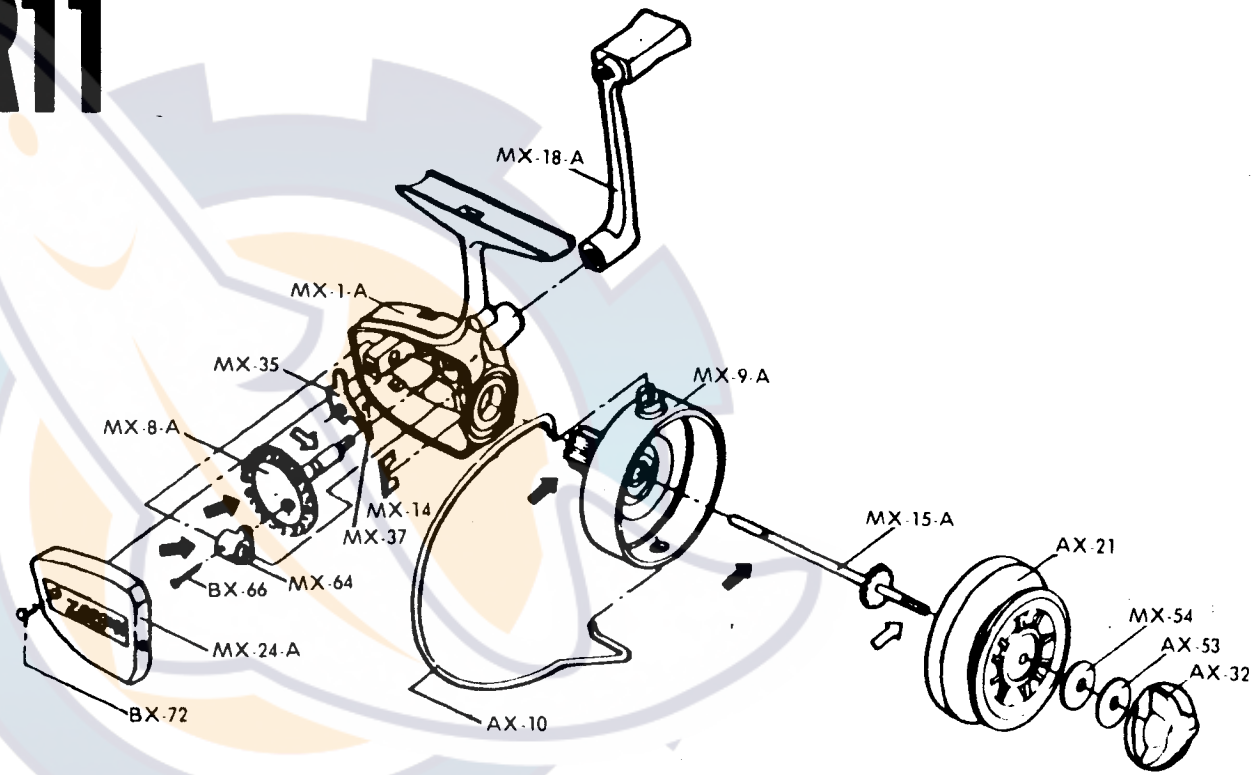

www.reelschematic.com