MODEL XRL37



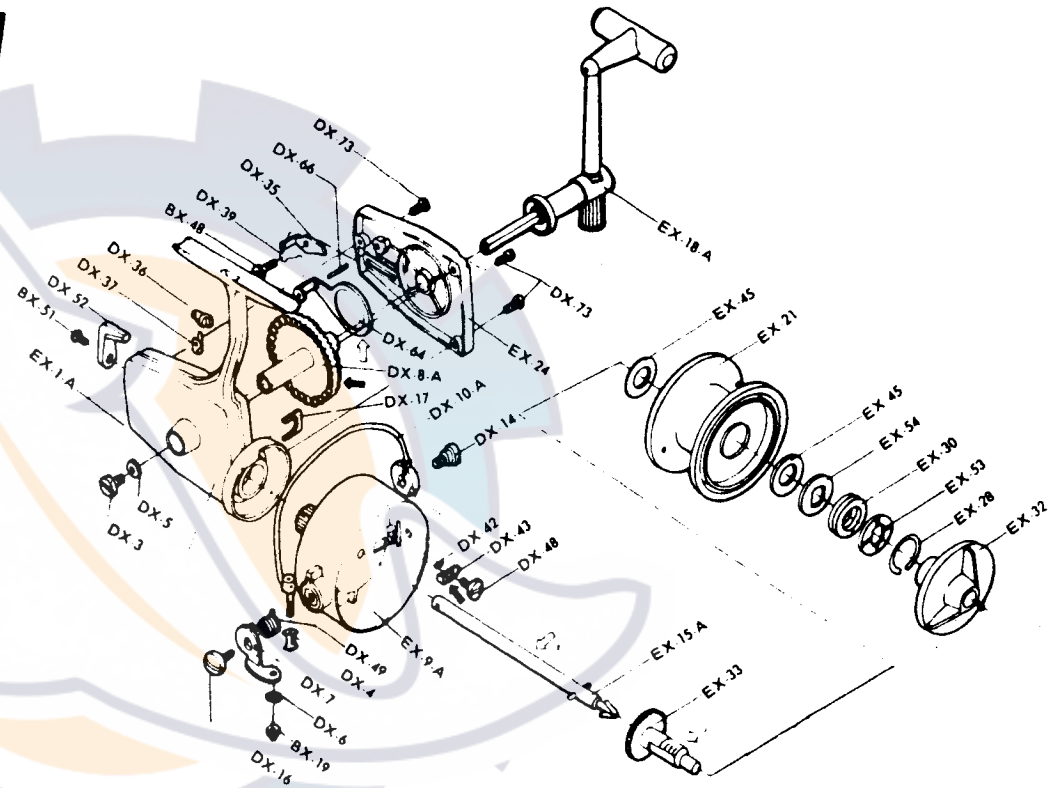

www.reelschematic.com