ZEBCO

MODEL XRL40

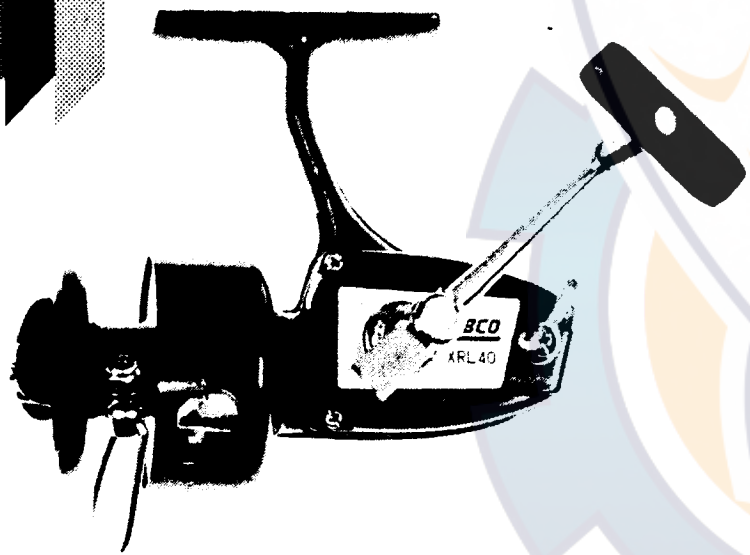

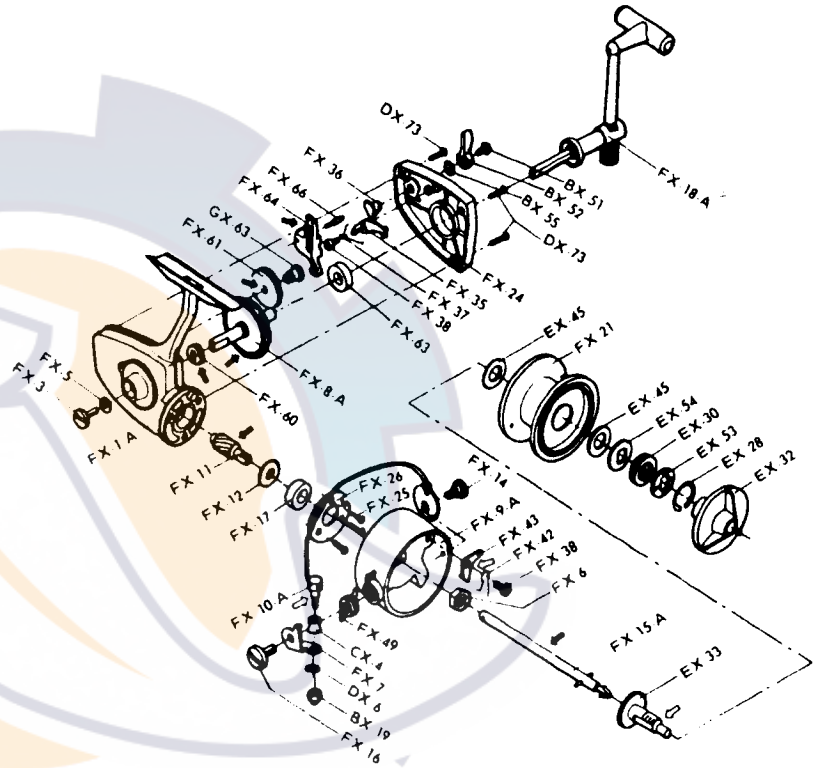

www.reelschematic.com