MODEL XRL80

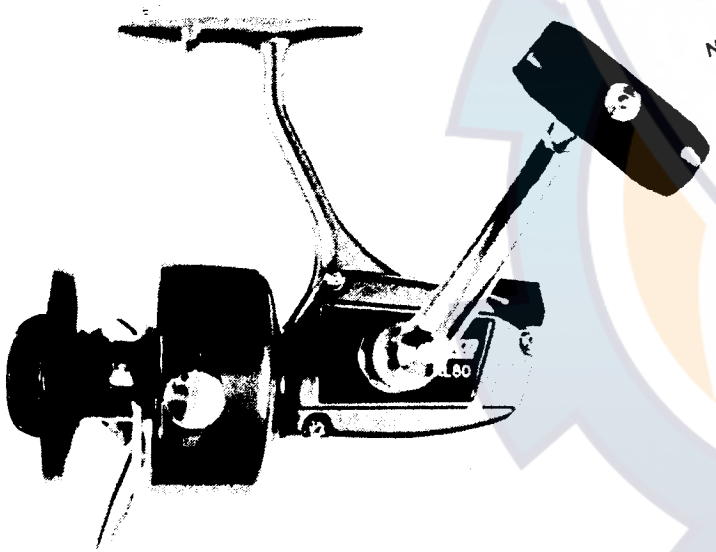

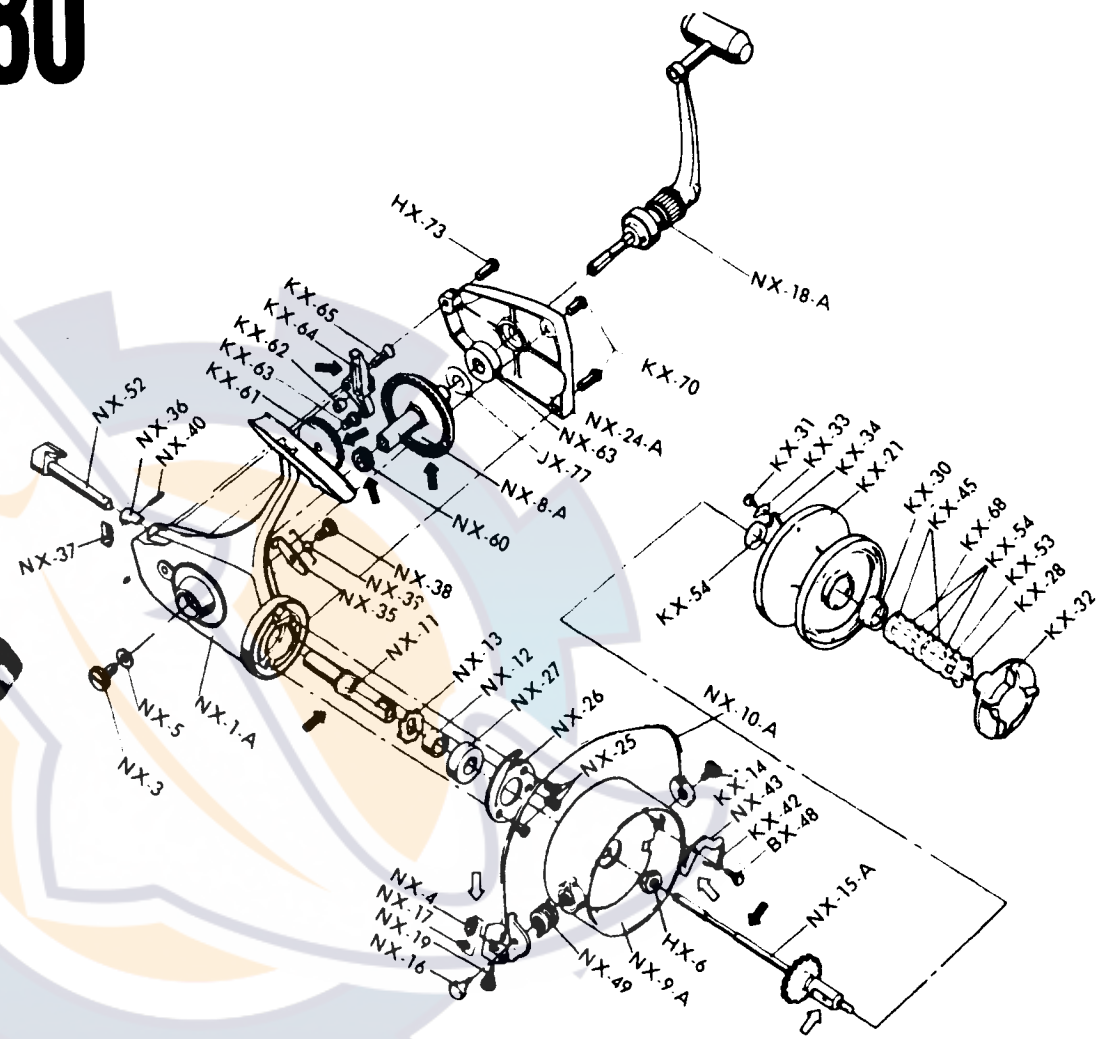

www.reelschematic.com