www.reelschematic.com

ZEBCO SHOOTER 99

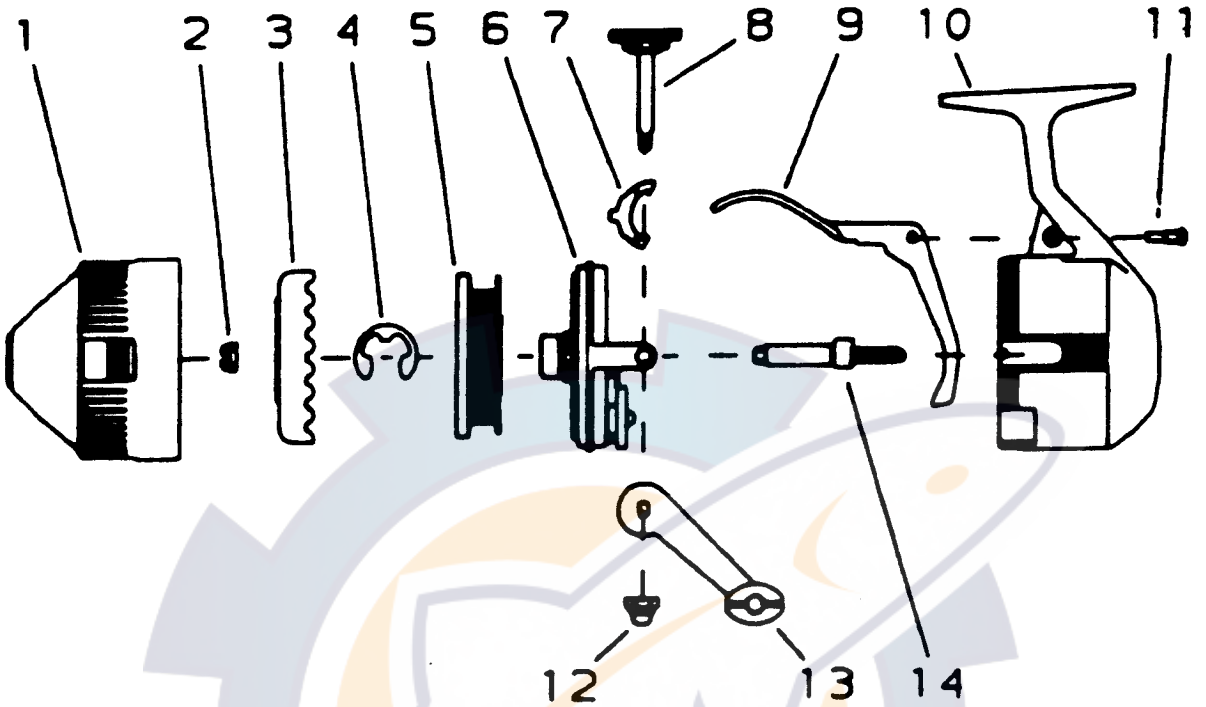

Key No.	Part No.	Description
1	NE324-2	Assembly - Frontcover
2	JZ006	Spinnerhead Nut
3	OJ310	Assembly - Spinnerhead
4	XZ034	Spool Clip
5	XZ321-8G	Assembly - Spool
6	XZ301	Assembly - Body
7	OJ063	Anti-Reverse Pawl
8	XZ308	Assembly - Crankshaft
9	OJ050	Trigger
10	OJ023	Backcover
11	BJ126	Screw
12	AZ003	Crank Nut
13	KY318-3	Assembly - Handle
14	XZ315	Assembly - Centershaft

PLEASE ORDER BY PART NUMBER

Rev. 2/92

Zebco Division Brunswick Corporation, Box 270, Tulsa, OK 74101 USA 918-836-5581

BRUNSWICK