www.reelschematic.com

ZEBCO SHOOTER 99

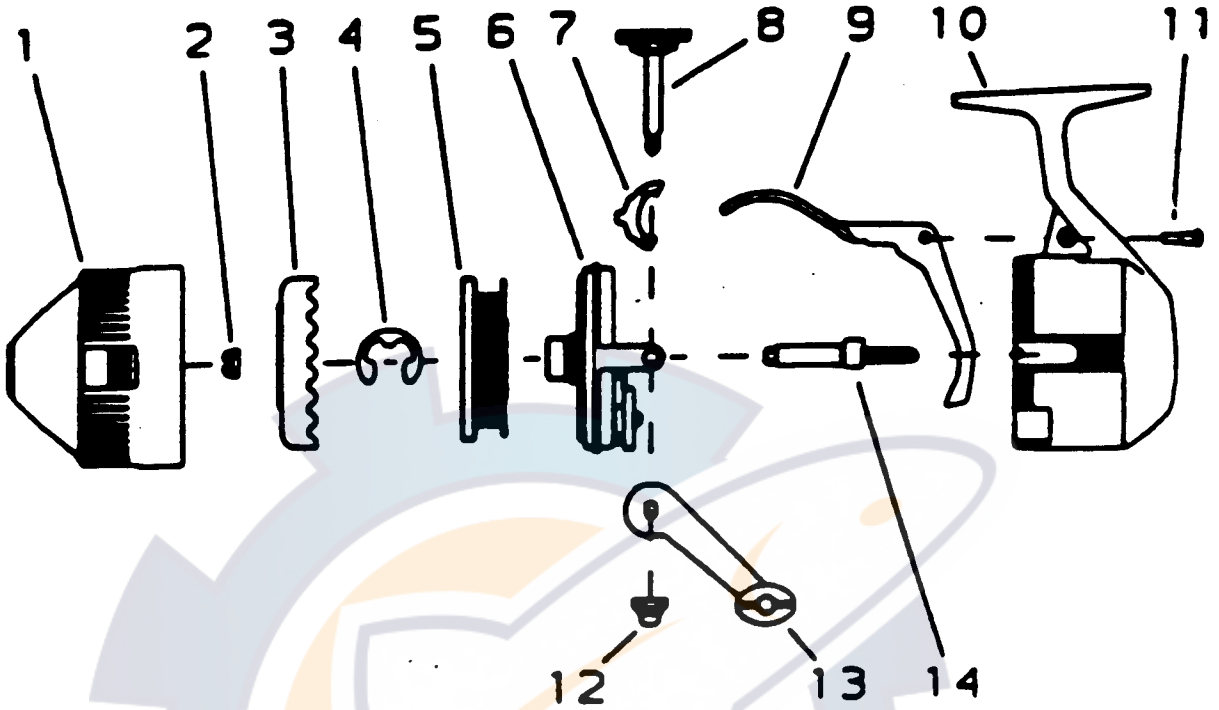

Key No.	Part No.	Description	Price
1	NE324-2	FRONT COVER	2.63
2	JZ006	SPINNER HEAD NUT	.44
3	OJ310	SPINNERHEAD	2.83
4	XZ034	SPOOL CLIP	.33
5	XZ321-8G	SPOOL W/LINE	2.69
6	XZ301	BODY S/A	2.43
7	OJ063	ANTI-REVERSE PAWL	.67
8	XZ308	CRANK SHAFT SUB-ASSEMBLY	1.93
9	OJ050	TRIGGER	2.73
10	OJ023	BACK COVER	3.19
11	BJ126	FINGER BRAKE SCREW	.31
12	AZ003	CRANK NUT	.56
13	KY318-3	HANDLE ASSY.	3.25
14	XZ315	CENTER SHAFT SUB-ASSEMBLY	2.05

Prices subject to change without notice. Prices do not include postage and handling.

PLEASE ORDER BY PART NUMBER

Rev. 5/93 Zebco Division Brunswick Corporation, Box 270, Tulsa, OK 74101 USA 918-836-5581

BRUNSWICK