www.reelschematic.com

ZEBCO STERLING™ 40SR™

CLOSED-FACE SPINNING REEL

weight	3.7 oz/105 g		
pound test	4	6	8
yards	85	60	45
meters	78	55	41
gear ratio	4.1:1		

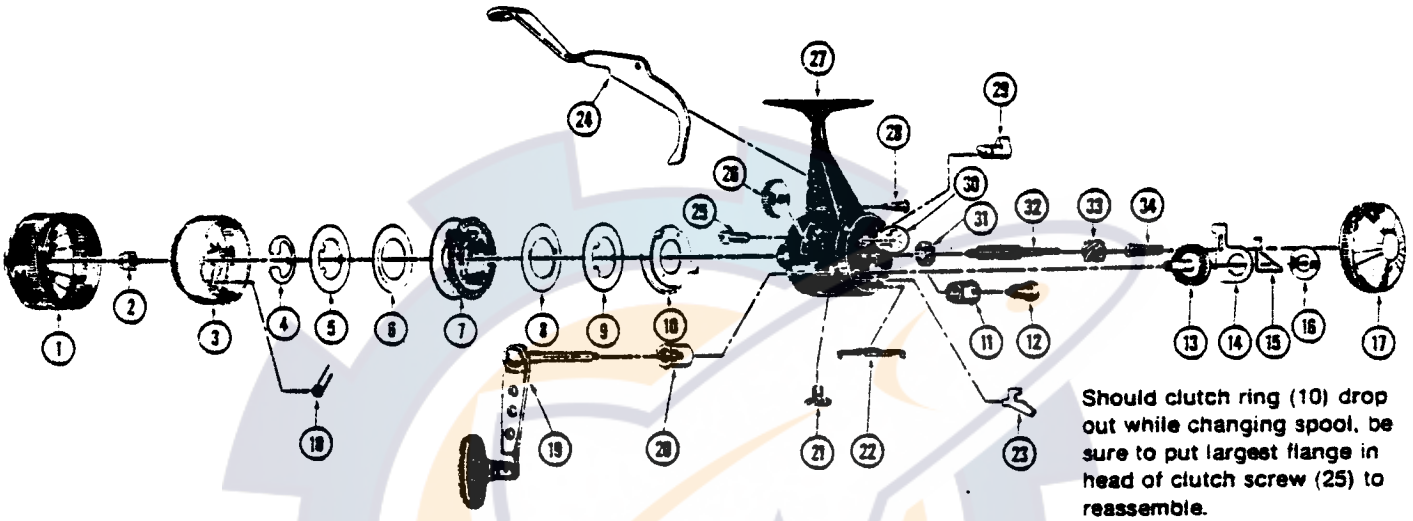

Should clutch ring (10) drop out while changing spool, be sure to put largest flange in head of clutch screw (25) to reassemble.

MODEL 40SR

Key No.	Part No.	Description
1	BJ324-4	Front Cover (Sterling)
2	AJ006	Spinner Head Nut
3	AJ310	Spinner Head Assy.
4	XZ034	Spool Clip
5	BJ040	Spool Washer
6	BJ108	Flat Washer
7	AJ021	Spool (Empty)
	AJ321-6T	Spool w/6# Trilene
8	BJ108	Flat Washer
9	BJ040	Spool Washer
10	BJ027	Clutch Ring
11	BJ026	Crank Bearing
12	BJ069	Crank Rod Nut
13	BJ012	Crank Gear
14	BJ014	Anti-Reverse Drag
15	BJ061	Anti-Rev. Pawl Spring
16	BJ106	Thrust Washer
17	BJ023-4	Back Cover (Sterling)
18	AJ049	Spinner Head Spring
19	BJ318-3	Handle Assy. (SR)
20	BJ026	Crank Bearing
21	AJ055	Cover Lock Screw
22	BJ056	Cover Lock Nut
23	BJ060	Anti-Reverse Pawl
24	BJ050	Finger Brake
25	BJ054	Clutch Screw
26	BJ032	Clutch Wheel
27	BJ301-3	Body (SR) w/Bearing
28	BJ126	Finger Brake Screw
29	BJ002	Anti-Reverse Actuator
30	BJ121	Retainer Clip
31	BJ017	Center Shaft Bearing
32	BJ015	*Center Shaft
33	BJ011	*Pinion Gear
34	BJ020	*Center Shaft Spring

*Available as One Unit,
BJ315 Center Shaft Assy.

PLEASE ORDER BY PART NUMBER

Zebco Division Brunswick Corporation, Box 270, Tulsa, OK 74101 USA 918-836-5581

BRUNSWICK