www.reelschematic.com

ZEBCO STERLING™ 7000™

weight	7.8 oz./221 g		
pound test	2	4	6
yards	210	130	90
meters	192	119	82
gear ratio	4.4:1		

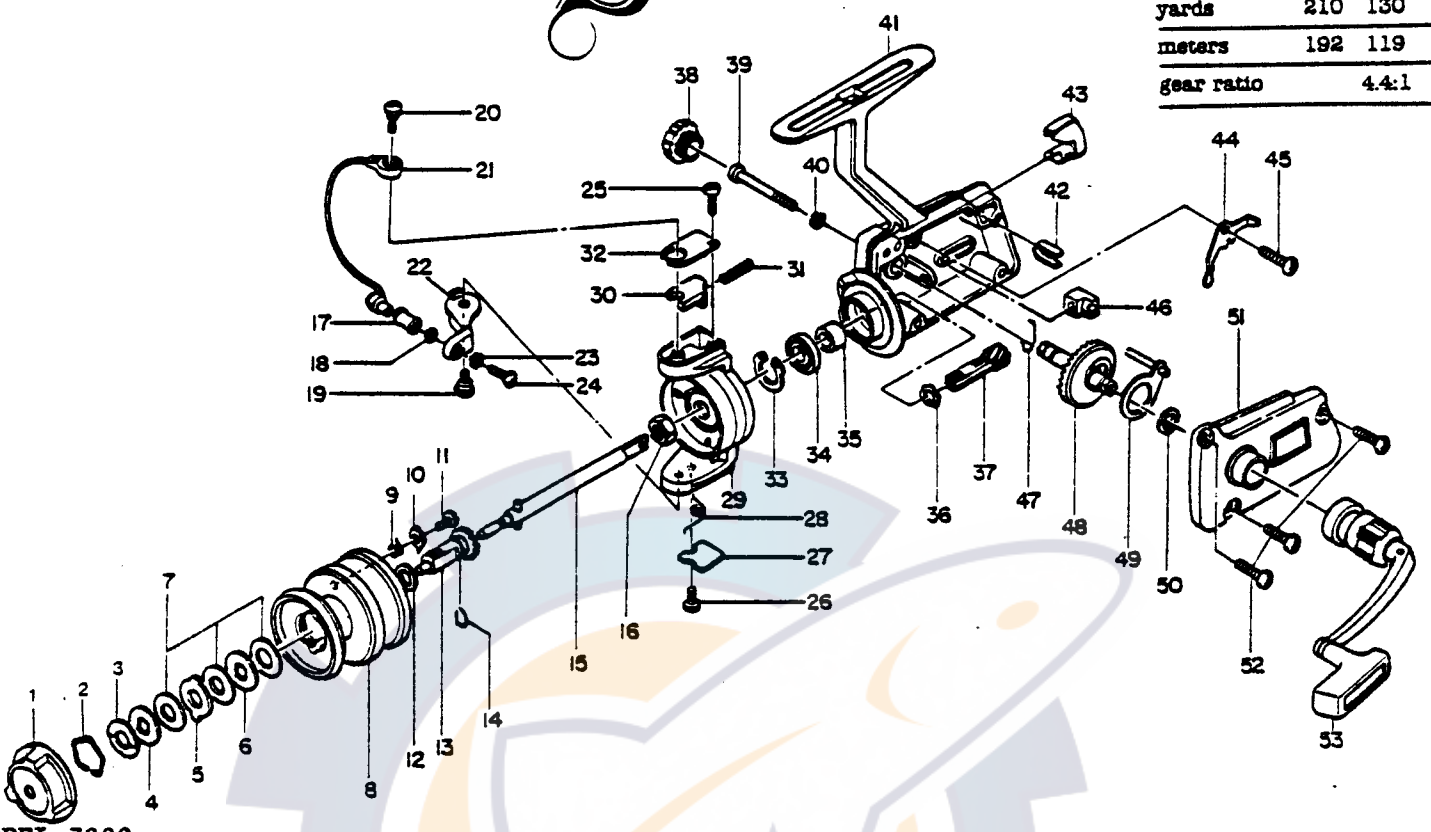

MODEL 7000

Key No.	Part No.	Description
1	JB37	*Drag Knob
2	CB36	*Drag Retainer Clip
3	JB35	*Spring Washer
4	JB31	*Drag Washer C
5	JB32	*Drag Drive
6	JB30	*Drag Washer A
7	JB33	*Drag Washer B
8	JB21	*Spool (See Assy.)
9	JB57	*Spool Claw Spring
10	JB55	*Spool Claw
11	JB56	*Spool Claw Screw
12	JB59	*Spool Spindle Washer
13	JB58	*Spool Spindle Assy.
14	JB60	*Spool Spindle Spring
15	JB15	Center Shaft
16	CB6	Rotor Nut
17	CB4	Line Roller
18	CB16	Line Roller Bushing
19	HB8	Bail Screw A
20	HB10	Bail Screw B
21	HB347	Bail Assembly
22	HB3	Bail Arm A
23	CB102	Bail Axle Washer
24	HB7	Bail Axle Screw
25	HB50	Bail Cover Screw
26	HB50	Bail Cover Screw
27	JB25	Bail Spring Cover
28	HB22	Bail Spring
29	JB9	Rotor
30	HB19	Bail Trip Lever
31	HB20	Bail Trip Spring
32	JB24	Bail Trip Cover
33	CB40	Bearing Retainer
34	HB28	Pinion Bearing
35	HB29	Pinion Spacer
36	HB40	Anti-Rev. Ratchet
37	HB11	Pinion Gear
38	JB73	Handle Retainer Cover
39	HB52	Handle Retainer
40	CB105	Handle Ret. Washer
41	JB301	Body Assembly
42	CB69	Anti-Rev. Knob Spring
43	HB38	Anti-Reverse Knob
44	JB41	Anti-Reverse Pawl
45	HB49	Anti-Rev. Pawl Screw
46	HB44	Oscillator Slider Link
47	JB42	Anti-Rev. Actuator
48	JB12	Crank Gear
49	HB43	Oscillator Slider
50	CB27	Crank Gear Shim
51	JB323	Side Plate Assy.
52	HB48	Side Plate Screws
53	JB318	Crank Handle Assy.

*Available as One Unit, JB321 Spool Assy.

PLEASE ORDER BY PART NUMBER