www.reelschematic.com

ZEBCO

STERLING™ 80SR™

weight	10.5 oz./298 g		
pound test	8	10	12
yards	115	100	90
meters	105	91	82

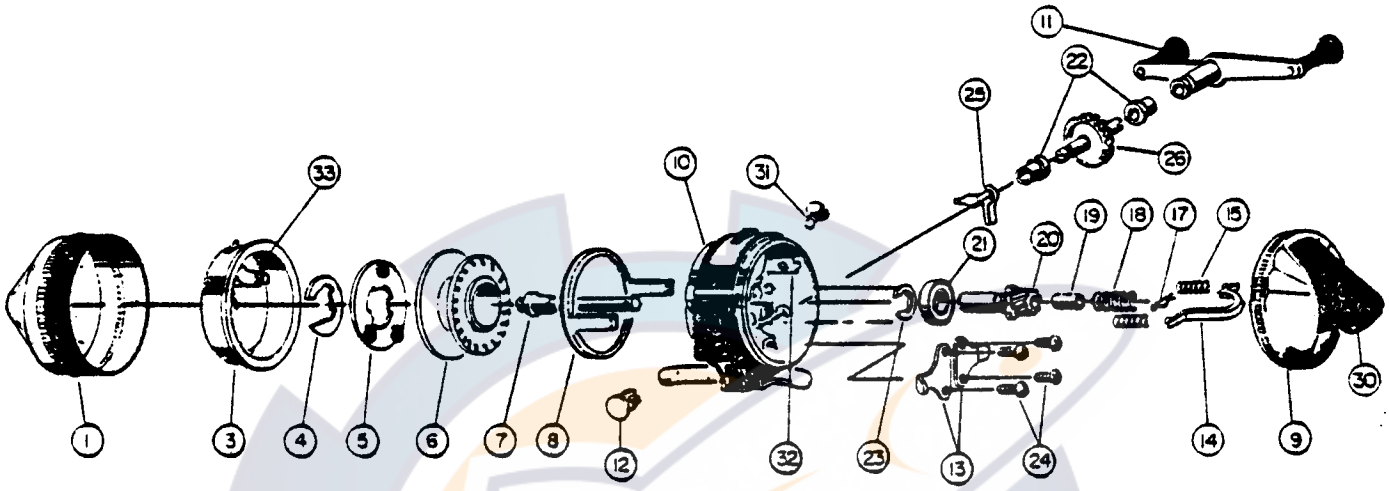

MODEL 80SR

Key No.	Part No.	Description
1	IZ324-3	Front Cover (SR)
3	IZ310	Spinner Head Assy.
4	GZ034	Retainer Clip
5	AZ040	Spool Washer
6	IZ021	Spool (Empty)
	IZ321-10T	Spool w/10# Trilene
7	AZ315-1	Center Shaft Assy.
8	IZ346	Brake Ring Ret. Assy.
9	IZ323-3	Back Cover w/Th. Brk.
10	IZ301-3	Body Assembly (SR)
11	IZ318	Crank Handle Assembly
12	IZ074	Closure Cap
13	IZ029	Bearing Retainer
14	IZ331	Brake Bar
15	AZ073	Brake Ring Ret. Spring
17	AZ124	Hitch Clip
18	IZ020	Center Shaft Spring
19	AZ078	Center Shaft Spacer
20	AZ311	Pinion Gear
21	AZ028	Ball Bearing
22	AZ026	Crank Bearing
23	PZ030	Retainer Clip
24	AZ057	Retainer Screw
25	IZ052	Anti-Reverse Drag
26	IZ308	Crank Shaft
30	IZ309-2	Thumb Stop (SR)
31	LZ055	Cover Lock Screw
32	IZ056	Cover Lock
33	JY049	Spinner Head Spring

PLEASE ORDER BY PART NUMBER

Zebco Division Brunswick Corporation, Box 270, Tulsa, OK 74101 USA 918-836-5581

BRUNSWICK